US 20260055026A1

(19) United States

(12) Patent Application Publication

Hickernell

(10) Pub. No.: US 2026/0055026 A1

(43) Pub. Date: Feb. 26, 2026

(54) **CONCRETE RECYCLING SYSTEM AND METHOD OF USE**

(71) Applicant: **Phillip James Hickernell**, Upland, CA (US)

(72) Inventor: **Phillip James Hickernell**, Upland, CA (US)

(21) Appl. No.: **18/811,132**

(22) Filed: **Aug. 21, 2024**

Publication Classification

(51) **Int. Cl.**

C04B 18/167	(2023.01)
B01D 21/26	(2006.01)
B01D 33/03	(2006.01)
B28C 5/08	(2006.01)

(52) **U.S. Cl.**

CPC ***C04B 18/167*** (2013.01); ***B01D 21/267*** (2013.01); ***B01D 33/0346*** (2013.01); ***B28C 5/0831*** (2013.01); ***B28C 5/0887*** (2013.01)

(57) **ABSTRACT**

A concrete recycling system and a method of use thereof is disclosed. The concrete recycling system may recycle aggregates and sand from fluid-concrete based on their grain size. Particularly, the concrete recycling system may have a slurry refiner that allows for the finer aggregates in the fluid-concrete to be recycled. The fluid-concrete may be diluted by water and fed to the slurry refiner via a fluid outlet having a turbulent discharge. The slurry refiner may allow the finer aggregates to settle to the bottom of said device for an auger system to uniformly mix the aggregates and transfer them along the length of the slurry refiner. The uniformly mixed slurry may then be pumped to a hydrocyclone to separate the finer aggregates from the cement and water in the slurry.

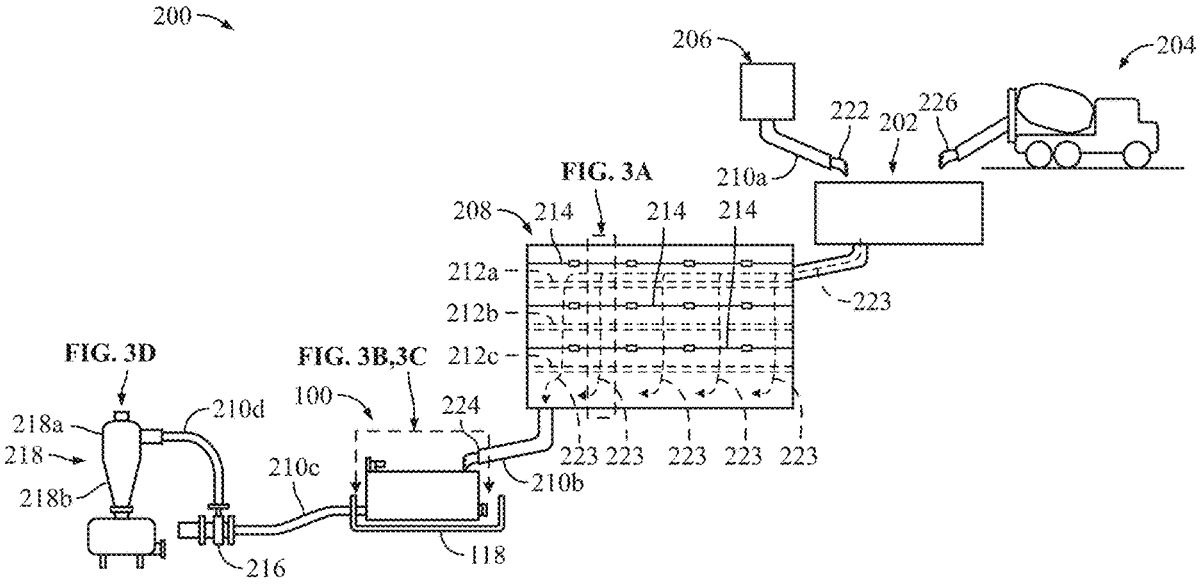

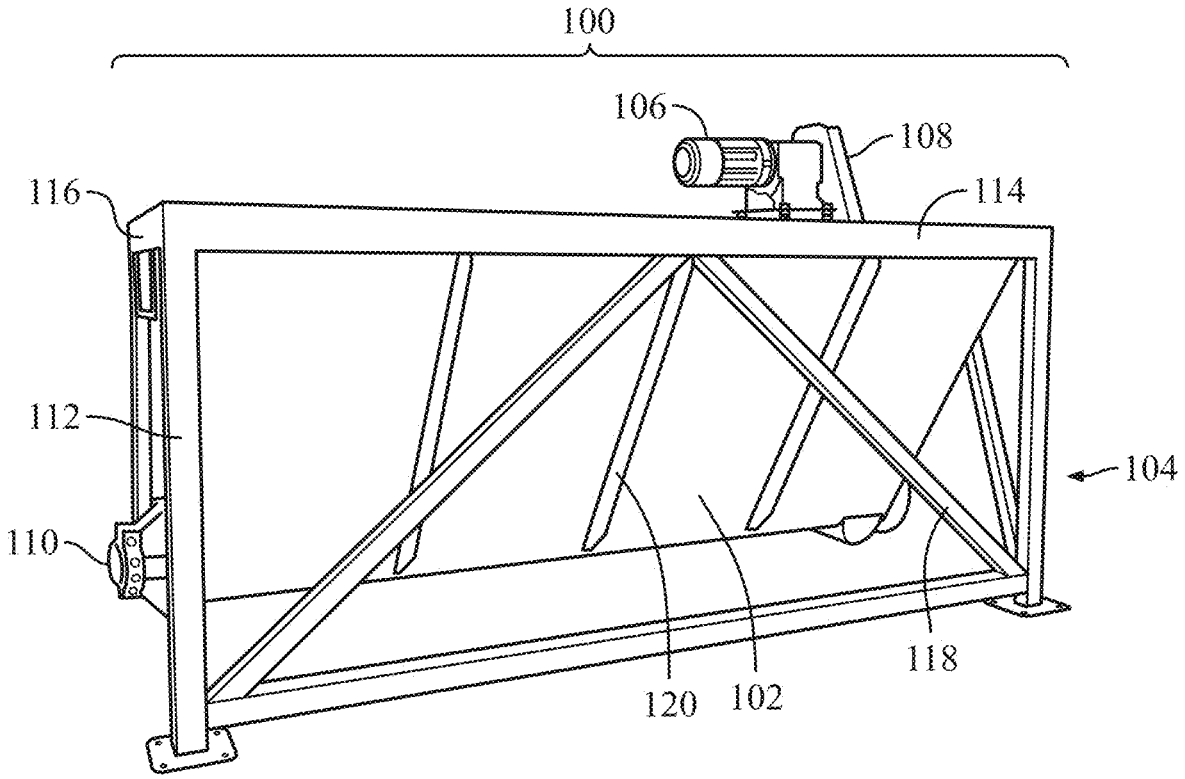

FIG. 1

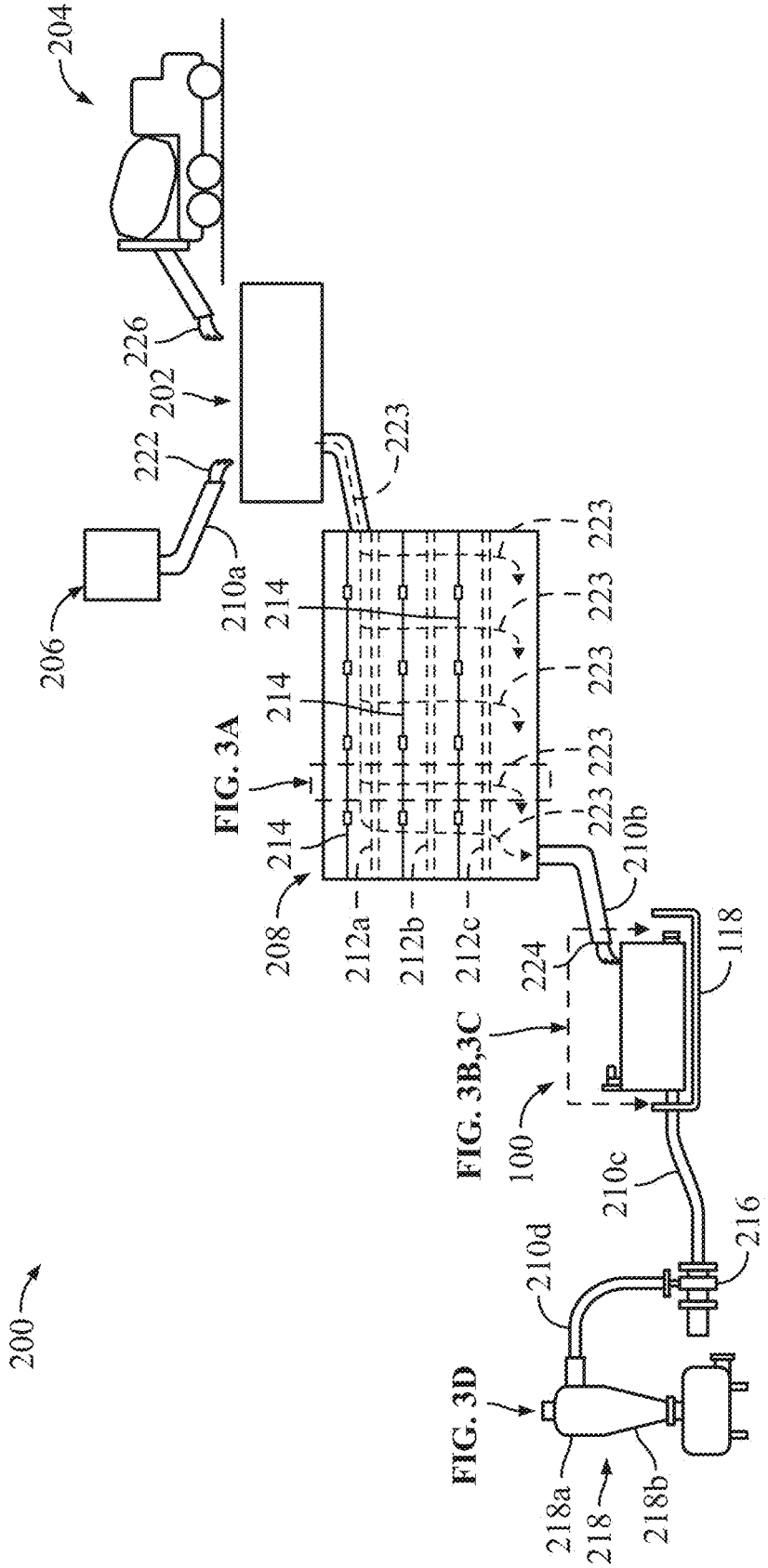
200
204
226
202
222
206
210a
223
214
FIG. 3A
208
212a
212b
212c
224
FIG. 3B,3C
100
210b
118
210c
216
210d
FIG. 3D
218a
218
218b

FIG. 2

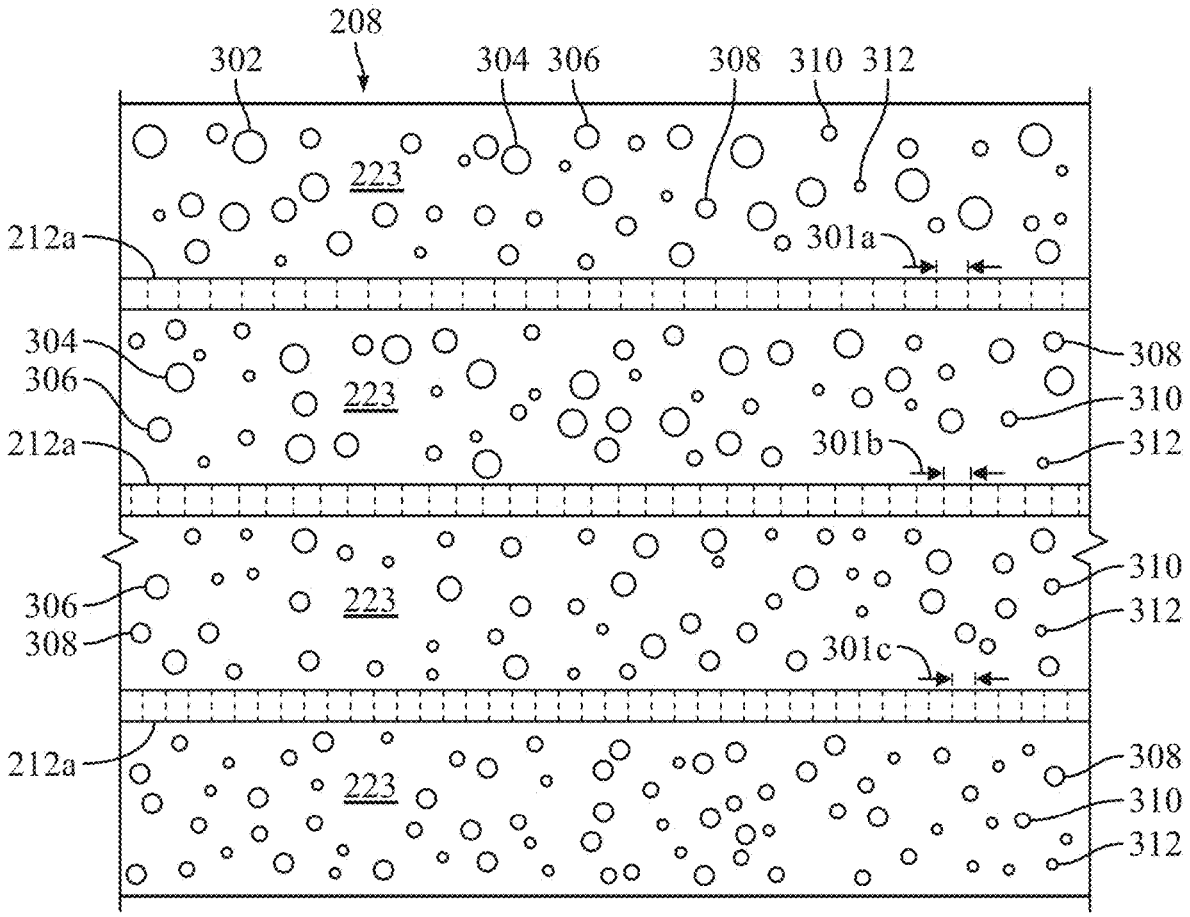
208
302
304
306
308
310
312
223
212a
301a
304
306
212a
223
301b
308
310
312
306
308
223
301c
310
312
212a
223
308
310
312

FIG. 3A

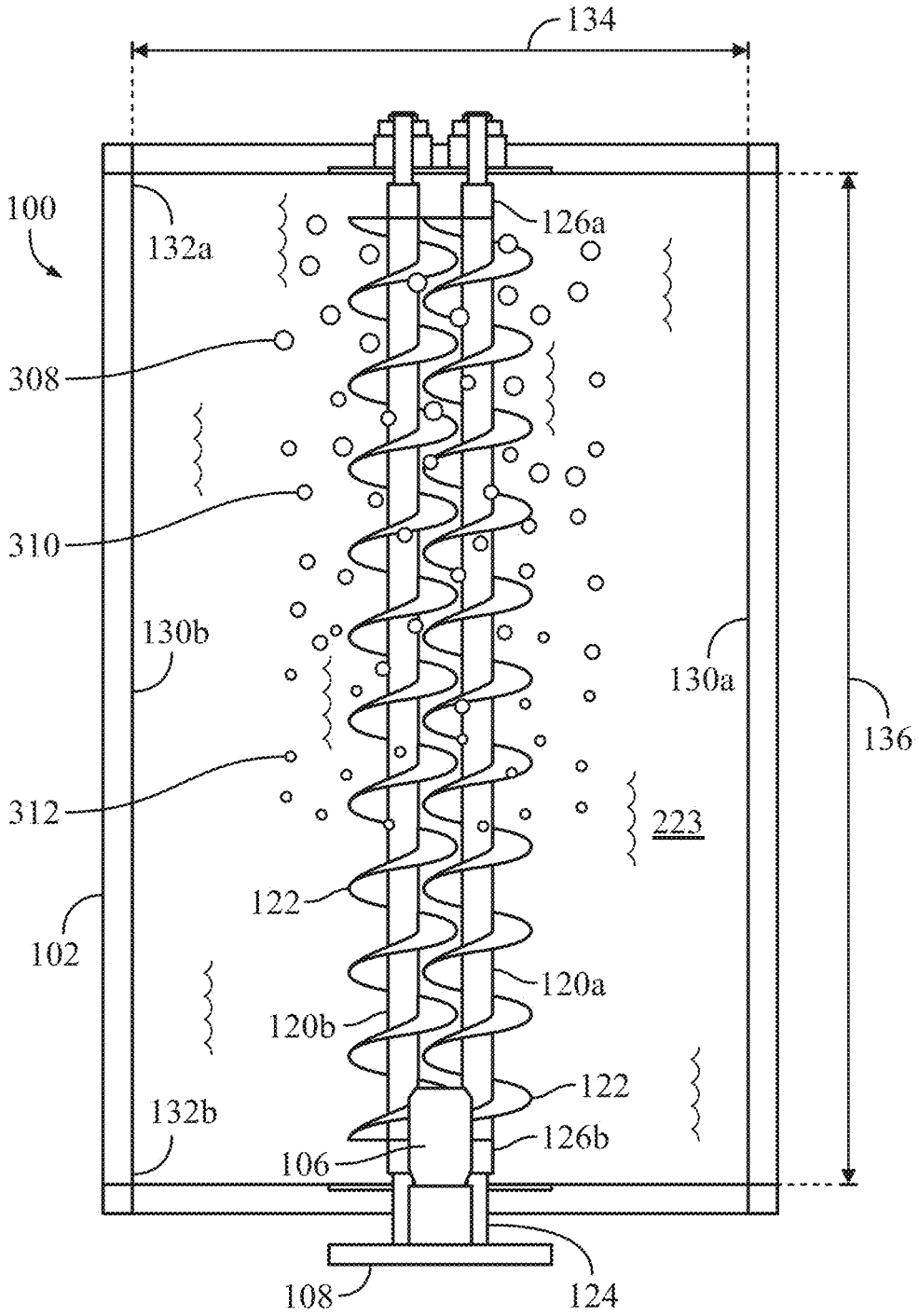
134
100
132a
126a
308
310
130b
130a
136
312
223
122
102
120a
120b
122
132b
126b
106
108
124

FIG. 3B

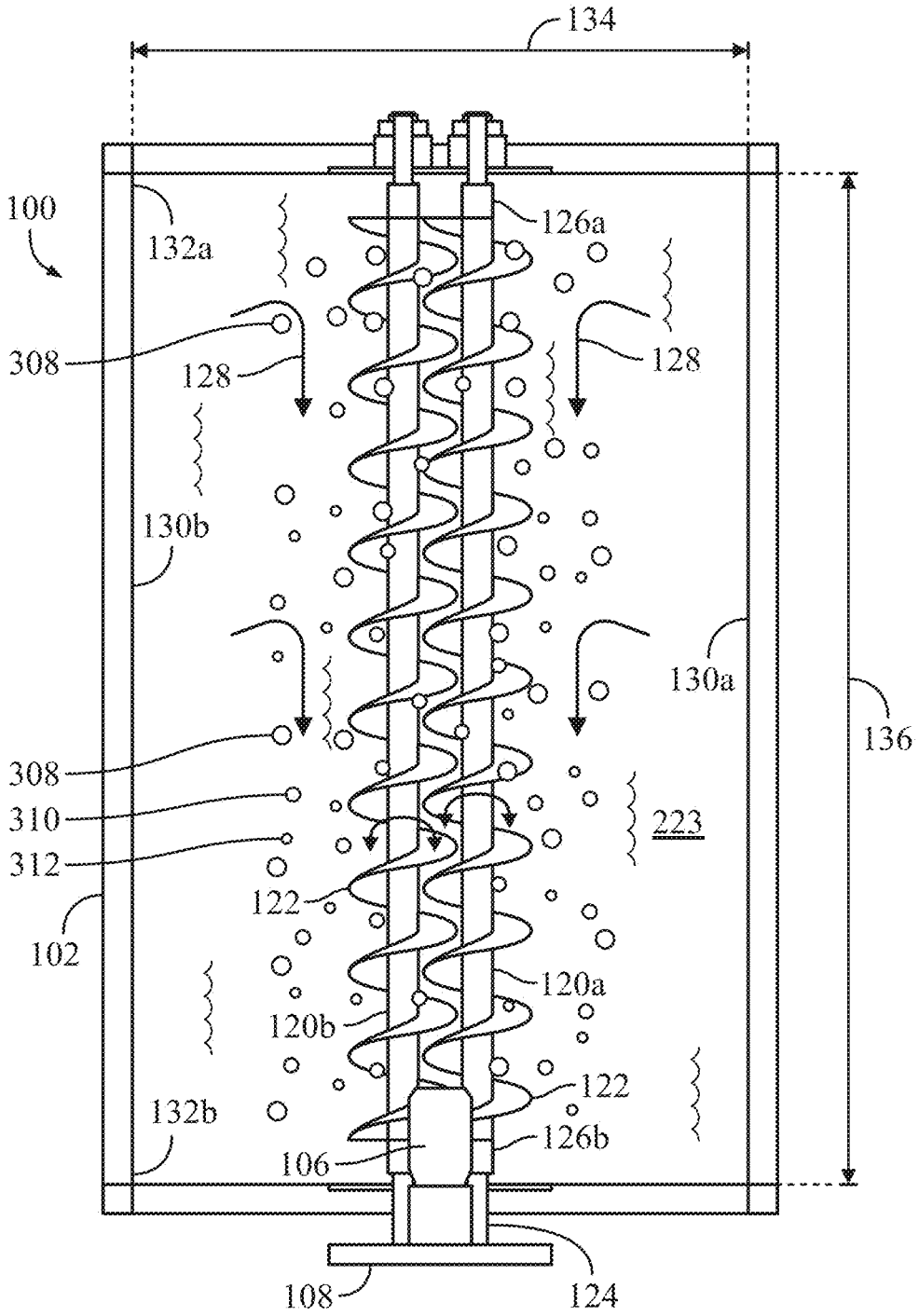
134
100
132a
126a
308
128
128
130b
130a
136
308
310
312
223
122
102
120a
120b
122
132b
126b
106
108
124

FIG. 3C

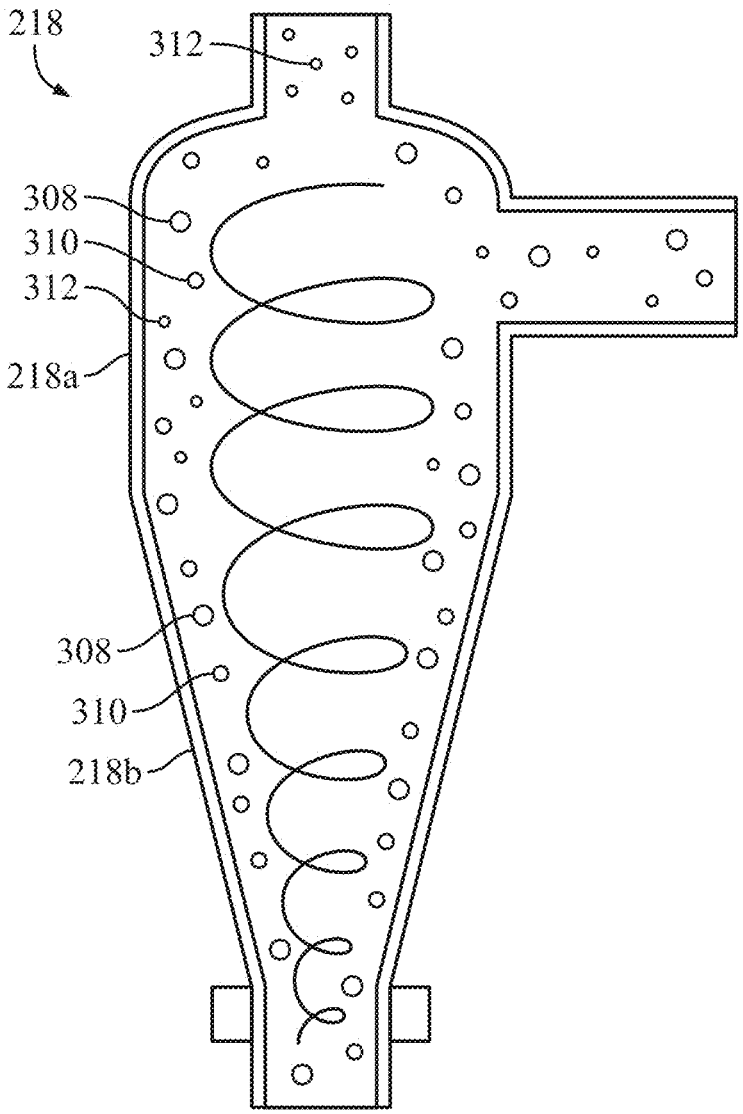

FIG. 3D

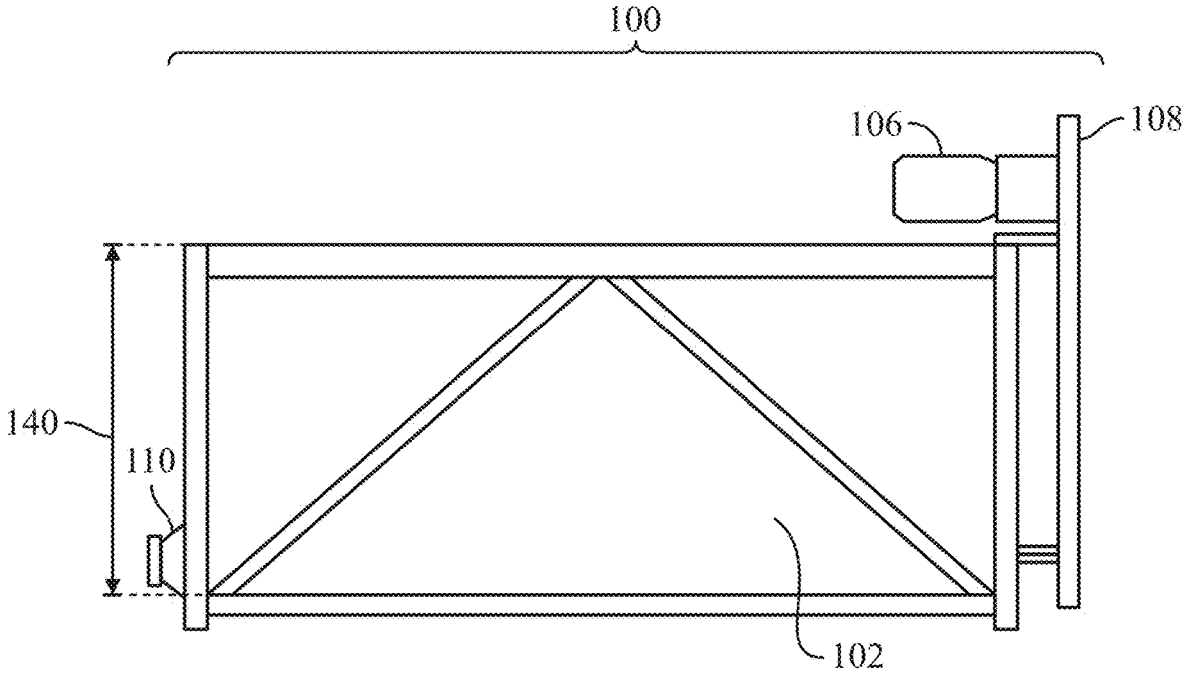

FIG. 3E

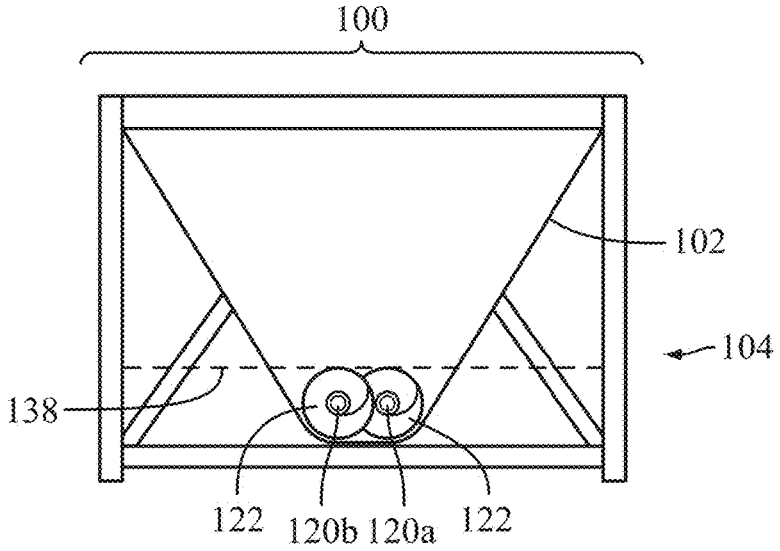

FIG. 3F

CONCRETE RECYCLING SYSTEM AND METHOD OF USE

CROSS-REFERENCE TO RELATED APPLICATIONS

[0001] Not Applicable

STATEMENT RE: FEDERALLY SPONSORED RESEARCH/DEVELOPMENT

[0002] Not Applicable

BACKGROUND

[0003] The various aspects and embodiments described herein relate to a concrete recycling system and a method of use thereof.

[0004] Concrete is used in many construction projects to build structures out of such material. To use concrete, however, such composition needs to be transferred to the construction site in fluid form. One or more mixer trucks may be used to dispatch fluid-concrete to the construction site. When the mixer trucks are finished providing fluid-concrete to the construction site, such vehicles may return to the concrete-making plant to discharge and recycle any unused fluid-concrete left in their reserves.

[0005] Accordingly, there is a need in the art for an improved device, system, and method for concrete recycling.

BRIEF SUMMARY

[0006] The various embodiments and aspects disclosed herein address the needs discussed above, discussed below and those that are known in the art.

[0007] A concrete recycling system and a method of use thereof is disclosed. The concrete recycling system may recycle aggregates and sand from fluid-concrete based on their grain size. The fluid-concrete may be diluted by water and be fed through a filtering system to separate the larger aggregates first from the diluted concrete slurry. The diluted concrete slurry may then flow downstream to have the finer aggregates separated therefrom. Particularly, the concrete recycling system may have a slurry refiner that allows for the finer aggregates in the fluid concrete to be recycled. The filtered and diluted concrete slurry may be fed to the slurry refiner via a fluid outlet having a turbulent discharge. The turbulent discharge may agitate the finer aggregates in the diluted concrete slurry to allow such aggregates to separate from cement binders and ultra-fine aggregates. The slurry refiner may allow the finer aggregates to settle to the bottom of said device for an auger system to uniformly mix the aggregates and transfer them along the length of the slurry refiner. The uniformly mixed slurry may then be pumped to a separating device, such as a hydrocyclone, to separate the finer aggregates from the cement and water in the slurry.

BRIEF DESCRIPTION OF THE DRAWINGS

[0008] These and other features and advantages of the various embodiments disclosed herein will be better understood with respect to the following description and drawings, in which like numbers refer to like parts throughout, and in which:

[0009] FIG. **1** shows a first view of a slurry refiner that may be used in a concrete reclaimer system;

[0010] FIG. **2** shows a concrete reclaimer system having the slurry refiner shown in FIG. **1**;

[0011] FIG. **3**A shows a close-up inside view of a portion of the mesh filtering system of FIG. **2**;

[0012] FIG. **3**B shows a top view of the slurry refiner of FIG. **2** in a deactivated mode;

[0013] FIG. **3**C shows a top view of the slurry refiner of FIG. **2** in an activated mode;

[0014] FIG. **3**D shows an inside cross-sectional view of the hydrocyclone in FIG. **2** in operation;

[0015] FIG. **3**E shows a side view of the slurry refiner of FIG. **2**; and

[0016] FIG. **3**F shows a front view of the slurry refiner of FIG. **2**.

DETAILED DESCRIPTION

[0017] Throughout the description herein, the flow rate of water, fluid-concrete, and diluted concrete slurry may be described in terms of volumetric flow rate. However, the mass flow rate of such fluids is also contemplated herein and the descriptions regarding the volumetric flow rate, described elsewhere herein, may apply to the mass flow rate of the aforementioned fluids. The sizes of the aggregates of the concrete, specifically in the diluted concrete slurry **223** shown in the FIGS. **3**A-D, may not be of scale and may be exaggerated to create visual clarity in the figures. Additionally, not all of the aggregate particles are shown, for example in FIGS. **3**A-D, for sake of clarity in the drawings.

[0018] Referring now to FIG. **1**, a first view of a slurry refiner **100** is shown. The slurry refiner **100** may be part of a concrete reclaimer system **200**, as shown in FIG. **2**, and help reclaim fine aggregates that do not get filtered and captured by the reclaiming structures (e.g., mesh filtering system **208**) upstream from the slurry refiner **100** in the reclaimer system **200**. As shown in FIG. **2**, the concrete reclaimer system **200** may be in the form of a factory and have one or more building structures as part of the system. The slurry refiner **100** may recycle fine aggregates (e.g., sand) from the fluid concrete **226** fed into the system **200** with the usage of turbulent discharge **224** of a diluted concrete slurry **223** into the slurry refiner **100**. The slurry refiner **100** may slow down the velocity of the turbulent discharge **224**, uniformly mix the diluted concrete slurry **223** (see FIG. **3**C), and convey such fluid to a hydcrocylone **218** for the separation of the fine aggregates.

[0019] As shown in FIG. **2**, the slurry refiner **100** of FIG. **1** may be part of a broader concrete reclaimer system **200** having multiple structures to thoroughly recycle, separate, and reclaim the useful elements of the fluid-concrete **226** that is being fed into the reclaimer system **200**. The concrete reclaiming process may begin with the fluid concrete **226** being discharged from a mixer truck **204** into a receiving hopper **202** and to be mixed with a large quantity of recycled water **222**. The mixing of the fluid concrete **226** with the recycled water **222** is designed to create a diluted slurry **223** that helps other structures (e.g., slurry refiner **100**) downstream of the receiving hopper **202** to function optimally. The diluted slurry **223** may move downstream from the receiving hopper **202** and on top of a mesh filtering system **208** having a plurality of vibratory mesh screens **212***a-c*. The mesh filtering system **208** may separate the larger sized aggregates from the diluted concrete slurry **223** using the vibratory screens **212***a-c* layers above each other and with water sprayed thereon by spray bars **214**.

[0020] When the larger sized aggregates are removed from the diluted concrete slurry **223**, the rest of the fluid having finer aggregates may flow downstream and enter the slurry refiner **100** via a turbulent discharge **224**. The turbulent discharge **224** may help separate cement particles from the finer aggregates in the filtered diluted concrete slurry **223**. The slurry refiner **100** may slow down the fluid velocity of the turbulent discharge **224** of the concrete slurry having the finer aggregates to allow the remaining aggregates to settle near the bottom **138** (see FIGS. **3**B and **3**F) of the slurry refiner **100**. The slurry refiner **100** may uniformly mix the finer sized aggregates remaining in the diluted concrete slurry **223** near the bottom **138** of the device and convey the mixture along the length of the slurry refiner **100** (see FIG. **3**C), where a slurry pump **216** (see FIG. **2**) may feed such mixture to a hydrocyclone **218**. The hydrocyclone **218** may then separate the finer aggregates in the mixture from other relatively smaller aggregates, cement particles, and water. The separated finer aggregates may be stored and transported for reuse, and the water used in the system and ejected from the hydrocyclone **218** may be recycled and reused in the system as the recycled water **222**.

[0021] Referring specifically to the slurry refiner **100**, the device may be a large open container designed for blending the agitated, quasi-filtered, and diluted slurry **223** flowing from the mesh filtering system **208** through the turbulent discharge **224** of the second piping **210***b*. The uniform mixture of the turbulent discharge **224** created by the slurry refiner **100** may allow the hydrocyclone **218** receiving such mixture to perform optimally when separating the fine aggregate from water, cement, and ultra-fine aggregate in the mixture. As shown in FIG. **3**C, the uniform mixture may be created by one or more augers **120***a-b* extending along the inside length **136** of the container body **102** of the slurry refiner **100**. The augers **120***a-b* may rotate their auger blades **122** to create a flow **128** that is inwards and forward inside the container body **102**, as described elsewhere herein. The rotational motion of the augers **120***a-b* may also mix together the fine aggregates that were agitated at the turbulent discharge **224**, the agitation separating such aggregates from the cement particles and ultra fine aggregates, such that the mixture is uniform and has fine aggregates at the desire size range. More details about the structures and functions of the slurry refiner **100** will be described elsewhere herein.

[0022] Referring back to FIG. **2**, a detailed explanation of the concrete reclaimer system **200**, the process of reclaiming unused fluid-concrete, and the utilization of the slurry refiner **100** will be explained herein. To initialize the process, mixer trucks **204** may dump their unused fluid-concrete **226** inside a receiving hopper **202** for reclaiming, recycling, and reusing the elements that make up the fluid-concrete **226** composition. A water source **210***a* may also add water **222** to the receiving hopper **202** to mix with and dilute the fluid-concrete **226** dumped by the mixer trucks **204** in the receiving hopper **202**. The diluted concrete slurry **223** created in the receiving hopper **202** may then flow downstream towards a mesh filtering system **208**.

[0023] When deployed to project sites, the mixer trucks **204** may carry more fluid-concrete **226** than required for construction to ensure there would be no shortage of fluid-concrete at the project site. When the mixer trucks **204** are done supplying fluid-concrete **226** at the project site, they may return to the concrete plant to discharge and empty the additional yardage of fluid-concrete remaining in their reserves. Each mixture truck **204** returning to the concrete plant may discharge fluid-concrete **226** at different flow rates inside the receiving hopper **202** (e.g., some mixer trucks **204** discharging fluid-concrete **226** in the receiving hopper **202** faster than other trucks). Such variation in the fluid-concrete **226** discharge rate inside the receiving hopper **202** may hinder the reclaiming process. Consequently, a relatively large amount of water **222** may be added to the receiving hopper **202** while fluid-concrete **226** is being discharged therein to create a diluted concrete slurry **223**. The amount of water **222** added to the receiving hopper **202** may be so much that the fluid-concrete **226** is diluted substantially where the varying rate of concrete discharge rate by the mixer trucks **204** becomes negligible and does not offset the concrete reclaimer system **200**.

[0024] The fluid-concrete **226** may be made of gravel, sand, crushed stone, cement binder, water, and other materials. The gravel and crushed stone may come in large (e.g., greater than or equal to 1 inch grain size), medium (e.g., less than 1 inch but greater than or equal ⅜ inch grain size), and small aggregates (e.g., less than ⅜ inch but greater than or equal ⅛ inch grain size). The sand may come in small, fine (e.g., less than or equal to ⅛ inch but greater than or equal to 1/32 inch grain size), extra fine aggregates (e.g., less than 1/32 inch but greater than or equal to 1/64 inch grain size), and ultra fine aggregate (e.g., less than 1/64 inch but greater than or equal to 1/128 inch grain size). The cement binder may have a grain size less than the ultra fine size described herein. The mesh filtering system **208** may separate the large, medium, and small aggregates for reuse, as shown in FIG. **3**A and described elsewhere herein. The slurry refiner **100** along with the hydrocyclone **218** may separate the fine and extra fine, and even the ultra-fine aggregates for reuse, as shown in FIGS. **3**B-D and described elsewhere herein. The sump **118** surrounding the slurry refiner **100** (see FIG. **2**) and receiving spill-over water may transfer such water having ultra-fine aggregates and cement for press-fitting to separate such particles from water for recycling and reuse.

[0025] The water **222** used to dilute the fluid-concrete **226** may be recycled water from the concrete reclaimer system **200**, for example coming from the outflow of the hydrocyl-cone **218** and the press-fitted water coming from the sump **118**. The recycled water **222** may be stored in a storage tank **206** (e.g., water tower) and be fed to the receiving hopper **202** via a water source pipe **210***a*. The flow rate of the recycled water **222** into the receiving hopper **202** to dilute the fluid-concrete **226** and create the diluted concrete slurry **223** may be greater than or equal to 1,000 gallons of water per minute. The flow rate of the recycled water **222** into the receiving hopper **202** to dilute the fluid-concrete **226** and create the diluted concrete slurry **223** may be less than or equal to 3,000 gallons of water per minute. The flow rate of the recycled water **222** into the receiving hopper **202** to dilute the fluid-concrete **226** and create the diluted concrete slurry **223** may be greater than or equal to 1,000 gallons and less than or equal to 3,000 gallons of water per minute. The discharge flow rate of the fluid-concrete **226** in the receiving hopper **202** for dilution may be less than the flow rate of water **222**, described elsewhere herein. The flow rate of water **222** may be between five times to 100 times the flow rate of the fluid-concrete **226** in the receiving hopper **202**. The flow rate of water **222** may be greater than or equal to five times the flow rate of the fluid-concrete **226** in the receiving hopper **202**. The flow rate of water **222** may be less

than or equal to 100 times the flow rate of the fluid-concrete **226** in the receiving hopper **202**. The discharge flow rate of the fluid-concrete **226** may vary since different drivers of different mixer trucks **204** may dump the excess fluid concrete at different flow rates.

[0026] When the fluid-concrete **226** is mixed and diluted by the recycled water **222** in the receiving hopper **202** to create the diluted concrete slurry **223**, such slurry may then move downstream to the mesh filtering system **208** to reclaim and recycle the larger aggregates first from the slurry. As shown in FIG. **3**A, the mesh filtering system **208** may have a plurality of filtering screens **212***a-c* stacked above each other, where each filtering screen **212***a-c* may be designed to trap and separate aggregates in a specific grain size range. The top filtering screen **212***a* may separate the large aggregates **302** from the diluted concrete slurry **223**, the middle filtering screen **212***b* may separate the medium aggregates **304**, and the lower filtering screen **212***c* may separate the small aggregates **306** from the diluted concrete slurry **223**. Such separation may be done by designing the mesh spacings **301***a-c* in the filtering screens **212***a-c* to be smaller than the aggregate grain size to be trapped and separated, and the filtering screens **212***a-c* may also vibrate to allow the smaller aggregates to pass through the mesh openings. Each level of filtering screen **212***a-c* may have spray bars **214** (see FIG. **2**) above the screen to spray water on top of the diluted concrete slurry **223** while the slurry is traveling through the vibrating filter screens **212***a-c* to help separate the aggregates. Each level of spray bars **214** corresponding to a level of filtering screen **212***a-c* may spray water above and across the filtering screen **212***a-c* by a flow rate ranging between 50 to 250 gallons per minute. The total water flow rate of all of the spray bars **214** of the mesh filtering system **208** may range between 150 to 500 gallons per minute.

[0027] Each mesh filtering screen **212***a-c* may have a length between 10 to 20 feet and a width between 10 to 20 feet and be configured to vibrate. The top mesh filtering screen **212***a* may have mesh openings **301***a* narrow enough to trap and separate large aggregates **302** in the diluted concrete slurry **223**, the large aggregates **302** having grain sizes greater than or equal to 1 inch. The mesh openings **301***a* of the top mesh filtering screen **212***a* may be wide enough to allow the rest of the aggregates having smaller grain size than the large aggregates **302** to pass through to the next layers of filtering. The middle mesh filtering screen **212***b* may have mesh openings **301***b* narrow enough to trap and separate medium aggregates **304** in the diluted concrete slurry **223**, the medium aggregates **304** having grain sizes greater than or equal to ⅜ inch. Since the top mesh filtering screen **212***a* already filtered out bigger aggregates, the middle mesh filtering screen **212***b* may separate aggregates having grain size in the range of greater than or equal to ⅜ inch and less than 1 inch. The mesh openings **301***b* of the middle mesh filtering screen **212***b* may be wide enough to allow the rest of the aggregates having smaller grain size than the medium aggregates **304** to pass through to the next layer of filtering. The mesh openings **301***b* of the middle mesh screen **212***b* may be narrower than the mesh opening **301***a* of the top mesh screen **212***a* but wider than the mesh opening **301***c* of the bottom mesh filtering screen **212***c*. The bottom mesh filtering screen **212***c* may have mesh openings **301***c* narrow enough to trap and separate small aggregates **306** in the diluted concrete slurry **223** having grain sizes greater than or equal to ⅛ inch. Since the above mesh filtering screen **212***a-b* already filtered out bigger aggregates, the bottom mesh filtering screen **212***c* may separate aggregates having grain size in the range of greater than or equal to ⅛ inch and less than ⅜ inch. The mesh openings **301***c* of the bottom mesh filtering screen **212***c* may be wide enough to allow the rest of the aggregates having smaller grain size than the small aggregates **306** (e.g., fine aggregates **308**, extra fine aggregates **310**, and ultrafine aggregates **312**) to pass through to the slurry refiner **100**, described elsewhere herein. The filtering by aggregate size on each mesh filtering screen **212***a-c* described herein is by example and not limitation. Any other combination of filtering by size may be used between the mesh filtering screens **212***a-c* (e.g., bottom mesh filter **212***c* filtering aggregates greater than or equal to ¼ inch).

[0028] The aggregates separated by size at each level of the mesh filtering system **208** may be conveyed and stored by size for recycling and remaking fluid-concrete **226**. The rest of the diluted concrete slurry **223** having finer aggregates (e.g., less than ⅛ inch grain size) may flow downstream towards the slurry refiner **100**. Alternatively, the mesh filtering system **208** may be configured to filter aggregates greater than or equal to ¼ inch and allow the aggregates less than ¼ inch to flow downstream to the slurry refiner **100** (e.g., bottom filtering screen **212***c* filtering aggregates having grain sizes greater than or equal to ¼ inch). The slurry refiner **100** may be the device that allows for a viable way to also separate and recycle the finer aggregates that are still remaining in the diluted concrete slurry **223** and could not be filtered by the mesh filtering system **208**.

[0029] At the entry point of the slurry refiner **100**, there may exist a turbulent discharge **224** of the diluted concrete slurry **223** to allow the remaining finer aggregates (e.g., less than ⅛ inch grain size) within the slurry to separate from the cement particles and other ultra fine aggregates. The turbulent discharge **224** may be above the slurry refiner **100** proximate to a first longitudinal end **132***a* of the container body **102** (see FIG. **3**B). A second pipe **210***b* fluidly connected to the mesh filtering system **208** may create the turbulent discharge **224** of the diluted concrete slurry **223** having finer aggregates. The second pipe **210***b* may have a diameter of **12** to **24** inches and allow the diluted concrete slurry **223** to burst out turbulently into the slurry refiner **100** due to the pressure of the upstream water source **222** and the water from the spray bars **214**. The flow rate of the turbulent discharge **224** may be the combination of the flow rate of the diluted concrete slurry **223** and the water from the spray bars **214**, described elsewhere herein. The flow rate of the turbulent discharge **224** may be greater than or equal to 1,250 gallons per minute. The flow rate of the turbulent discharge **224** may be less than or equal to 3,000 gallons per minute. The flow rate of the turbulent discharge **224** may range from 1,250 to 3,000 gallons per minute, for example 2,350 gallons per minute. The bursting out at the turbulent discharge point **224** may agitate the diluted concrete slurry **223** to the point where the finer aggregates separate from unwanted particles, such as cement binders, when entering the container body **102** of the slurry refiner **100**.

[0030] The container body **102** of the slurry refiner **100** receiving the turbulent discharge **224** may allow the agitated fine **308** and extra fine **310** aggregates of the diluted concrete slurry **223** to settle at the bottom (see FIG. **3**B) of the container body **102**. As shown in FIG. **3**F, the container body

102 and its storage cavity may have a V-shaped cross-section, with the width of the container body **102** and its storage cavity narrowing when moving towards the bottom **138** to allow the fine **308** and extra fine aggregates **310** to settle down towards the one or more augers **120***a-b* (see FIG. **3**B). The heigh boundary defining the bottom **138** of the container body **102** (see FIG. **3**F) may be defined by the diameter of the auger blades **122** of the one or more augers **120***a-b*. Specifically, the bottom boundary **138** may be defined by the outer edges of the auger blades extending upwards in the container body **102**, as shown in FIG. **3**F. The cement binders and the ultra-fine aggregates **312** may float above the separated fine **308** and extra fine **310** aggregates and above the bottom boundary **138** set by the auger blades **122** within the container body **102**. Some of the ultra-fine aggregates **312** may also settle at the bottom **138** of the container body **102** (see FIG. **3**B). The agitated fine aggregates **308** may be in the range of less than or equal to ⅛ inch but greater than or equal to 1/32 inch grain size, and the agitated extra fine aggregates **310** may be in the range of less than 1/32 inch but greater than or equal to 1/64 inch grain size. In other examples, the agitated fine aggregates **308** entering the container body **102** of the slurry refiner **100** may be less than or equal to ¼ inches and settle at the bottom **138**. The ultra-fine aggregates **312** may be in the range of less than 1/64 inch but greater than or equal to 1/128 inch grain size. It should be noted that the grain size definitions for fine, extra fine, and ultra-fine provided herein is for reference only and the grain size definitions may be categorized in other combinations of the grain size of the aggregates provided elsewhere herein.

[0031] Since the weight of the larger sized fine aggregates **308** may be greater than the smaller sized extra fine aggregates **310**, **312**, the heavier aggregates may settle at the bottom **138** closer to the first longitudinal end **132***a* of the container body **102** (see FIG. **3**B) and where the turbulent discharge **224** is located, as described elsewhere herein. The smaller sized extra fine aggregates **310**, **312** may settle to the bottom **138** of the container body **102** proximate to the center length of the augers **120***a-b* or even proximate to the second longitudinal end **132***b* of the container body **102**. The settling of the smaller sized aggregates **310**, **312** at the aforementioned location in the container body **102** may be because such smaller sized aggregates weigh less than the larger sized fine aggregates **308** and would float more in the diluted concrete slurry **223** inside the container body **102**. The division of the fine aggregates **308** with the extra fine aggregates **310**, and even ultra-fine aggregates **312**, caused by their difference in weight may be remedied using a mixture and conveyance mechanism of the slurry refiner **100**. The one or more augers **120***a-b* of the slurry refiner **100** may be designed to rotate and transfer the larger sized fine aggregates **308** from the first longitudinal end **132***a* of the container body **102** to the second longitudinal end **132***b* and mix the larger aggregates with the smaller fine aggregates **310**, **312** at the bottom **138** of the container body **102** to create a uniform slurry mixture (see FIG. **3**C) to be fed to the hydrocyclone **218** (see FIG. **2**). The auger blades **122** may be spiral-shaped to allow such movement and mixture. The uniform slurry mixture may allow the hydrocyclone **218** to separate the aggregates better than if the diluted slurry mixture **223** was fed directly from the mesh filtering system **208** without using the slurry refiner **100**. As shown in FIG. **2**, an outlet pipe **210***c* may be coupled to the bottom **138** of the V-shaped container body **102** at the second longitudinal side **132***b* (see FIG. **3**A) to transfer the uniform slurry mixture created by the slurry refiner **100** to the hydrocyclone **218** using a slurry pump **216**.

[0032] Referring back to FIG. **3**B-C, the structural features of the slurry refiner **100** will be described herein. The container body **102** may have a storage cavity with a length **136** greater than or equal to 10 feet. The length **136** of the storage cavity may be less than or equal to 16 feet. The length **136** of the storage cavity of the container body **102** may be in the range of 10 to 16 feet. The container body **102** may have a storage cavity with a maximum width **134** of greater than or equal to six feet. The maximum width of the storage cavity may be less than or equal to 12 feet. The maximum width **134** of the storage cavity of the container body **102** may be in the range of six to 12 feet. As described elsewhere herein, the width of the storage cavity of the container body **102** may narrow into a V-shape (see FIG. **3**F) when moving deeper towards the bottom surface of the container body **102**. Such V-shape may help gather the fine and extra fine aggregates that are heavier towards the one or more augers **120***a-b* by allowing such aggregates to slide along the V-shaped surfaces towards the augers. The storage cavity may have a minimum width at the bottom surface of the V-shape in the range of one to six feet. The container body **102** may have a storage cavity with a depth **140** (see FIG. **3**E) greater than or equal to five feet. The storage cavity may have a depth **140** less than or equal to 10 feet. The depth of the storage cavity of the container body **102** may be in the range of five to 10 feet. Such large dimension of the storage cavity of the container body **102** may allow for the turbulent discharge **224** entering the slurry refiner **100** to slow down and allow the leftover finer aggregates within the diluted slurry mixture **223** to settle to the bottom **138** and bottom surface of the container body **102**.

[0033] As shown in FIG. **1**, the outside of the container body **102** may be supported and elevated off the ground by a plurality of supporting structures **104**. Such supporting structures **104** may include vertical beams **112** connected to longitudinal beams **114** to make rectangular-shaped structures along the length of the container body **102** of the slurry refiner **100**. The vertical beams **112** may elevate the container body **102** upwards from the ground. One or more diagonal beams **118** may extend in between the rectangular-shaped structures created by the vertical and longitudinal beams **112**, **114** for additional support. The outside of the container body **102** may also be supported by lateral beams **116** connecting the rectangular-shaped structures formed by the beams **112**, **114** on each side of the container body **102** and slurry refiner **100**. The lateral beams **116** may have diagonal beams **118** therebetween as well. The outside surface of the container body **102** may have a plurality of support ribs **120** designed to add thickness to the container body **102** holding the great weight of the slurry concrete water. The container body **102** and the storage cavity therein may also have a V-shape, where the width of the container body **102** may narrow when reaching the bottom **138** of the container body **102**. The V-shape and narrowing in width when extending down in the depth of the container body **102** may direct the fine, extra fine, and even some of the ultra-fine aggregates towards the one or more augers **120***a-b* for mixing and conveying (see FIGS. **3**B-C).

[0034] As shown in FIG. **3**E, the slurry refiner **100** may have an electric drive motor **106** that may be either proxi-

mate to the second longitudinal side **132***b* (see FIG. **3**B) or the first longitudinal side **132***a* of the container body **102**. The electric drive motor **106** may drive and rotate the one or more augers **120***a-b* extending inside and along the length of the container body **102**. The electric drive motor **106** may be above the container body **102** and be coupled to the one or more augers **120***a-b* at the bottom **138** of the container body **102** using a chain and belt system that may be within an exterior belt/chain housing **108**. The exterior housing **108** may be attached outside of one longitudinal end of the container body **102**. The chain and belt system inside the exterior housing **108** may be rotatably coupled to the coupling ends of the one or more augers **120***a-b* extending out of the container body **102**. The electric drive motor **106**, the chain and belt system, and the external housing **108** may be removable attached to the outside of the container body **102** and the coupling ends of the augers **120***a-b*. The one or more augers **120***a-b* may each also have a second end **110** (see FIG. **1**A) rotatable coupled to the other longitudinal end of the container body **102**.

[0035] As shown in FIGS. **3**B-C, the one or more augers **120***a-b* may be located at the center of the maximum width **134** of the storage cavity of the container body **102** and extend along the length **136** of the container body **102**. Specifically, the one or more augers **120***a-b* may be located at the bottom of the V-shape of the storage cavity of the container body **102**. Alternatively, the one or more augers **120***a-b* may be distributed symmetrically along the width **134** of the container body **102**, and its storage cavity, when the storage cavity is not V-shaped but another shape (e.g., rectangular). The slurry refiner **100** may have between one to eight augers **120***a-b*. The one or more augers **120***a-b* may be placed adjacent side-by-side to each other. Alternatively, the one or more augers **120***a-b* may be placed above each other. The one or more augers **120***a-b* may rotate either clockwise or counterclockwise depending on how the auger blades **122** are shaped to transfer and mix a uniform slurry mixture from one longitudinal end **132***a* to the other longitudinal end **132***b* of the container body **102**. The plurality of augers **120***a-b* may all rotate in the same direction (e.g., clockwise or counterclockwise). The plurality of augers **120***a-b* may be paired up together and each auger **120***a-b* in the pair may rotate in the opposite direction of the other pair, depending on how the auger blades **122** of each auger **120***a-b* in the pair are shaped to transfer and mix the uniform slurry mixture. The one or more augers **120***a-b* may each rotate at a rate greater than or equal to 10 RPM. The one or more augers **120***a-b* may each rotate at a rate less than or equal to 80 RPM. The one or more augers **120***a-b* may each rotate in the range of 10 to 80 RPM. The calibration of the revolutions per minute of the one or mor augers **120***a-b* may depend on the size of the slurry refiner **100** and the content and composition of the diluted concrete slurry **223** fed to the device at the turbulent discharge **224**. For example, having a greater amount of aggregate in the slurry mixture, which such aggregates were not filtered by the mesh filtering system **208**, may require the augers **120***a-b* to rotate at a slower RPM to create a more uniform slurry mixture.

[0036] As shown in FIG. **3**C, the one or more augers **120***a-b* may be the structures that rotate to transfer and mix a uniform slurry mixture from one longitudinal end **132***a* to the other longitudinal end **132***b* of the storage cavity of the container body **102**, described elsewhere herein. The container body **102** of the slurry refiner **100** and its storage cavity may have a V-shaped cross-section (see FIG. **3**F) and have a width that narrows when reaching the bottom of the container and the one or more augers **120***a-b*. This may allow the fine **308** and extra fine **310** aggregates that are heavier to slide and settle towards the augers **120***a-b* for mixing and transferring. As shown in FIG. **3**C, the auger blades **122** may create a flow **128** within the container body **102** that draws the diluted concrete slurry **223** to be mixed inwards towards the one or more augers **120***a-b* (i.e., away from the longitudinal sides **130***a-b* of the container body **102**) and forward from a first end **126***a* of the augers **120***a-b* to the second end **126***b* of the augers **120***a-b* inside the container body **102**, as described elsewhere herein. The auger blades **122** may have a blade diameter that is large enough to mix and transfer the aggregates, described elsewhere herein, that settle at the bottom **138** of the container body **102**. The auger blades **122** may be concave spiral fin-shaped to scoop and draw the slurry mixture inwards towards the augers **120***a-b* and forward towards the second longitudinal end **132***b* of the container body **102**. The first end **126***a* of the one or more augers **120***a-b* may be located on the same side as the first longitudinal end **132***a* of the storage cavity of the container body **102** (see FIG. **3**B), and where the second pipe **210***b* (see FIG. **2**) creating the turbulent discharge **224** is located. The second end **126***b* of the one or more augers **120***a-b* may be located on the same side as the second longitudinal end **132***b* of the storage cavity of the container body (see FIG. **3**B), and where a slurry refiner outlet pipe **210***c* (see FIG. **2**) transferring the uniformly mixed slurry to a slurry pump **216** is located.

[0037] As shown in FIG. **3**C, the one or more augers **120***a-b* may be designed to transfer the larger sized fine aggregates **308** from the first longitudinal end **132***a* of the container body **102** to the second longitudinal end **132***b* and mix the larger aggregates with the smaller aggregates **310**, **312** at the bottom **138** of the container body **102** to create a uniform slurry mixture to be fed to the hydrocyclone **218** (see FIG. **2**). As described elsewhere herein, the larger sized fine aggregates **308** (e.g., less than or equal to ⅛ inch but greater than or equal to 1/32 inch grain size) may settle at the bottom **138** proximate to the first longitudinal end **132***a* of the container body **102**. As described elsewhere herein, the extra fine aggregates **310** (e.g., less than 1/32 inch but greater than or equal to 1/64 inch grain size) may settle at the bottom **138** proximate to the middle of the container body **102**, and even some of the ultra-fine aggregates **312** (e.g., less than 1/64 inch but greater than or equal to 1/128 inch grain size) may settle at the bottom **138** proximate the center and the second longitudinal end **132***b* of the storage cavity of the container body **102**. As the augers **120***a-b* rotate, and as shown in FIG. **3**C, the auger blades **122** transfer the fine aggregates **308** from the first end **126***a* of the augers **120***a-b* to the second end **126***b* of the augers **120***a-b* while mixing the fine aggregates **308** with the extra fine aggregates **310** and some of the ultra-fine aggregates **312** to create a uniform mixture. The uniform mixture is then supplied to a hydrocyclone **218** via a slurry pump **216**, as described elsewhere herein.

[0038] The outlet pipe **210***c* connected to the bottom **138** of the second longitudinal end **132***b* of the container body **102** may be fluidly connected to a slurry pump **216** that pumps the uniform mixture formed by the slurry refiner **100** to the hydrocyclone **218**. The pump flow rate of the slurry pump **216**, from the slurry refiner **100** to the hydrocyclone **218**, may be less than the turbulent discharge **224** flow rate

entering the slurry refiner **100**. Alternatively, the pump flow rate of the slurry pump **216** may equal the turbulent discharge **224** flow rate. The pump flow rate of the slurry pump **216** may be greater than or equal to 1,000 gallons per minute. The pump flow rate of the slurry pump **216** may be less than or equal to 2,750 gallons per minute. The pump flow rate of the slurry pump **216** may be in the range of 1,000 to 2,750 gallons per minute. As a result, some of the turbulent discharge **224**, particularly the portion of the slurry having the ultra-fine aggregates and cement particles, may overflow out of the top of the slurry refiner **100** and into a sump structure **118** around the slurry refiner **100**. For example, if the turbulent discharge **224** flow rate is 2,350 gallons per minute and the pumping flow rate out of the slurry refiner **100** (e.g., via the outlet pipe **210***c*) is 2,000 gallons per minute, then 350 gallons per minute may overflow from the top of the slurry refiner **100** and into the sump structure **118** around the slurry refiner **100**. The sump **118** may have walls surrounding the slurry refiner **100** and collect the overflow having the ultra-fine aggregates and cement particles. The sump **118** may have a drain to allow the overflow to be transferred out of the sump **118** and to be press-fitted to further recycle the ultra-fine aggregates and the water forming the slurry. The water from the sump **118** that is press-fitted may be recycled, transferred, and used as the recycled water **222** in the beginning of the concrete reclaimer system **200**.

[0039] As described elsewhere herein, the slurry pump **216** may pump the uniform mixture of the diluted concrete slurry **223** out of the bottom of the slurry refiner **100** via an outlet pipe **210***c* connected to an inlet of the slurry pump **216**. The outlet of the slurry pump **216** may have a third pipe **210***d* fluidly connected to an inlet of the hydrocyclone **218** where the pump **216** feeds the uniform slurry mixture to the inlet of the hydrocyclone **218**. As described elsewhere herein, the pump rate of the slurry pump **216** may be less than or equal to the turbulent discharge **224** rate entering the slurry refiner **100**.

[0040] The hydrocyclone **218** may better perform in separating fine and extra fine aggregate from the rest of what is left in the the concrete slurry **223** when such device is fed the uniform mixture created by the slurry refiner **100**. The hydrocyclone **218** may even separate some of the ultra-fine aggregates remaining in the uniform mixture. As shown in FIG. **3**D, the hydrocyclone **218** may be a high-throughput gravity separation device that uses centrifugal force and gravity to separate the aforementioned aggregates from water, cement binders, and other unwanted particles. The fine **308** and extra fine **310** aggregates (e.g., the grain sizes described elsewhere herein) may be separated from the rest of the uniform mixture and drop in the underflow **218***b* of the hydrocyclone **218**. The ultra-fine aggregates **312** may separate and exit from the overflow **218***a*. In some examples, even some ultra-fine aggregates **312** may be separated from the uniform mixture and fall in the underflow **218***b* of the hydrocyclone **218**. The separated aggregate from the uniform mixture may then be transferred, stored, and reused to make another batch of fluid-concrete. Water, cement binders, and other unwanted particles (e.g., ultra-fine aggregates **312**) may flow upward out of the overflow **218***a* of the hydrocyclone **218** via an upward vortices spiral. The water separated by the hydrocyclone **218** may be recycled, transferred, and be used as the recycled water **222**, described elsewhere herein, in the beginning of the concrete reclaimer system **200**.

[0041] The above description is given by way of example, and not limitation. Given the above disclosure, one skilled in the art could devise variations that are within the scope and spirit of the invention disclosed herein. Further, the various features of the embodiments disclosed herein can be used alone, or in varying combinations with each other and are not intended to be limited to the specific combination described herein. Thus, the scope of the claims is not to be limited by the illustrated embodiments.

What is claimed is:

1. A method of recycling differently sized aggregates from fluid-concrete, comprising:

discharging the fluid-concrete in a receiving hopper at a first volumetric flow rate;

diluting the fluid concrete with water having a second volumetric flow rate flowing inside the receiving hopper to create a diluted concrete slurry, the second volumetric flowrate being larger than the first volumetric flow rate;

filtering larger aggregates from the diluted concrete slurry using a mesh filtering system;

flowing the diluted concrete slurry in a pipe having a turbulent discharge that opens up to a slurry refiner, the turbulent discharge separating remaining smaller aggregates from cement binders in the diluted concrete slurry;

mixing the remaining smaller aggregates in the diluted concrete slurry using one or more rotating augers of the slurry refiner; and

pumping the diluted concrete slurry from the slurry refiner to a hydrocyclone for separating the remaining smaller aggregates from water and cement binders in the diluted concrete slurry.

2. The method of claim **1**, wherein the second volumetric flow rate is between 5 to 100 times greater than the first volumetric flow rate.

3. The method of claim **1**, wherein the remaining smaller aggregates in the diluted concrete slurry each have a grain size less than or equal to ⅛ inches.

4. The method of claim **3**, further comprising moving the remaining smaller aggregates that are being mixed from a first end to a second end of the slurry refiner using the one or more rotating augers.

5. The method of claim **1**, wherein the remaining smaller aggregates in the diluted concrete slurry each have a grain size less than or equal to ¼ inches.

6. The method of claim **1**, wherein the mesh filtering system comprises a plurality of vibrating mesh screens and a plurality of water spray bars.

7. The method of claim **1**, further comprising collecting an overflow of the diluted concrete slurry flowing from a top of the slurry refiner using a sump.

8. The method of claim **1**, wherein water separated by the hydrocyclone is recycled and flown into the receiving hopper for diluting additional batches of fluid concrete.

9. A method of using a slurry refiner to create a uniform mixture of diluted concrete slurry to be fed to a filtering device, comprising:

turbulently discharging the diluted concrete slurry inside the slurry refiner, the turbulent discharge separating

fine aggregates and extra fine aggregates of the diluted concrete slurry from cement binders;

settling the fine aggregates and extra fine aggregates near a bottom surface of the slurry refiner;

mixing the fine aggregates and extra fine aggregates near the bottom surface of the slurry refiner by rotating one or more augers extending along a length of a storage cavity of the slurry refiner;

transferring the fine aggregates and extra fine aggregates being mixed along the length of the storage cavity to an outlet having a slurry pump coupled therewith, the transferring happening by rotating the one or more augers having auger blades that create translational fluid motion when the auger blades are rotated; and

pumping the mixed fine aggregates and extra fine aggregates to the filtering device for separation.

10. The method of claim **9**, wherein the diluted concrete slurry goes through a mesh filtering system that is upstream from the turbulent discharge of the diluted concrete slurry inside the slurry refiner.

11. The method of claim **10**, wherein the mesh filtering system filters large, medium, and small aggregates from the diluted concrete slurry.

12. The method of claim **11**, wherein the diluted concrete slurry is created by mixing a first volume of fluid-concrete with a second volume of water, the second volume being at least five time greater than the first volume.

13. The method of claim **11**, wherein the fine aggregates each have a grain size less than or equal to ¼ inches.

14. The method of claim **13**, wherein the fine aggregates each have a grain size less than or equal to ⅛ inches.

15. The method of claim **14**, wherein the extra fine aggregates each have a grain size less than or equal to 1/32 inches.

16. The method of claim **9**, wherein the length of the storage cavity of the slurry refiner is at least 10 feet, and the storage cavity has a depth that is at least 5 feet and a maximum width that is at least 7 feet.

17. A slurry refiner used for recycling fine and extra fine aggregates of fluid-concrete, comprising:

a container structure having a storage cavity with an open top and a bottom surface, the storage cavity having a length, a depth, and a narrowing width creating a V-shape from the open top to the bottom surface;

a support structure attached and surrounding the container structure;

one or more augers extending along the length of the storage cavity and rotatably coupled near the bottom surface and in a middle of the V-shape of the storage cavity of the container structure;

an electric drive motor attached to the container structure for rotating and driving the one or more augers; and

a belt system rotatably coupling the electric drive motor to the one or more augers.

18. The slurry refiner of claim **17**, wherein the one or more augers comprise at least two augers.

19. The slurry refiner of claim **18**, wherein the at least two augers are configured to rotate in opposite directions relative to each other.

20. The slurry refiner of claim **17**, wherein the length of the container structure is at least 10 feet and the depth of the container structure is at least 5 feet.

* * * * *