April 9, 1963 R. E. JORDAN, JR., ET AL 3,084,402

ACOUSTICAL PANEL

Filed Nov. 17, 1958 2 Sheets-Sheet 1

FIG. 1.

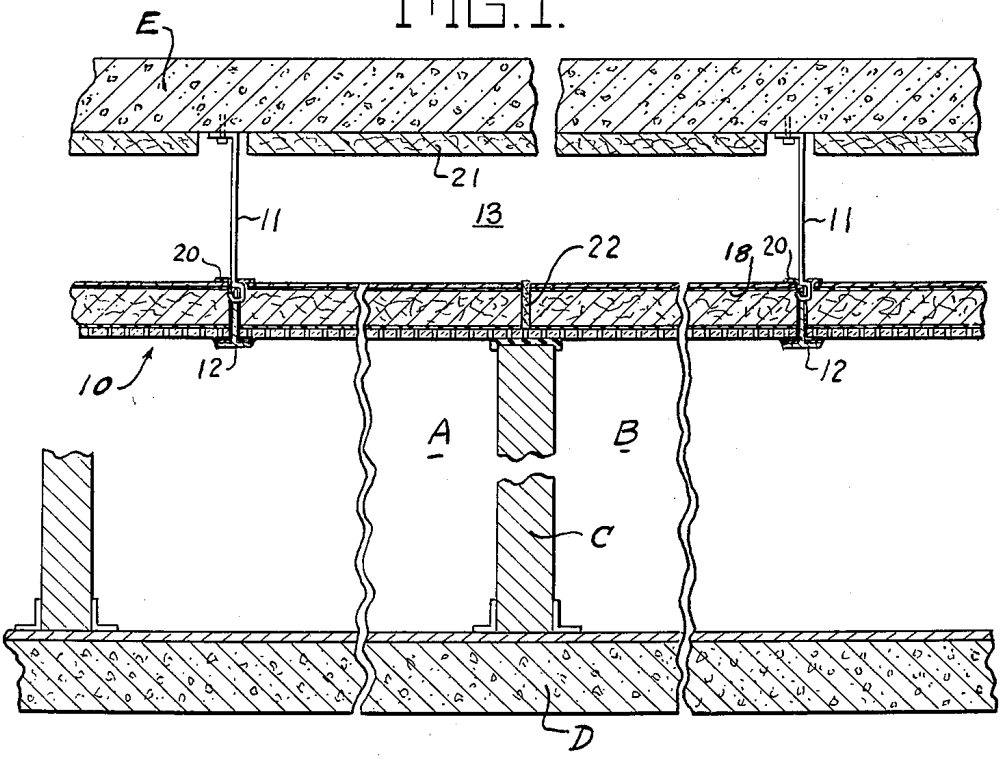

FIG. 2.

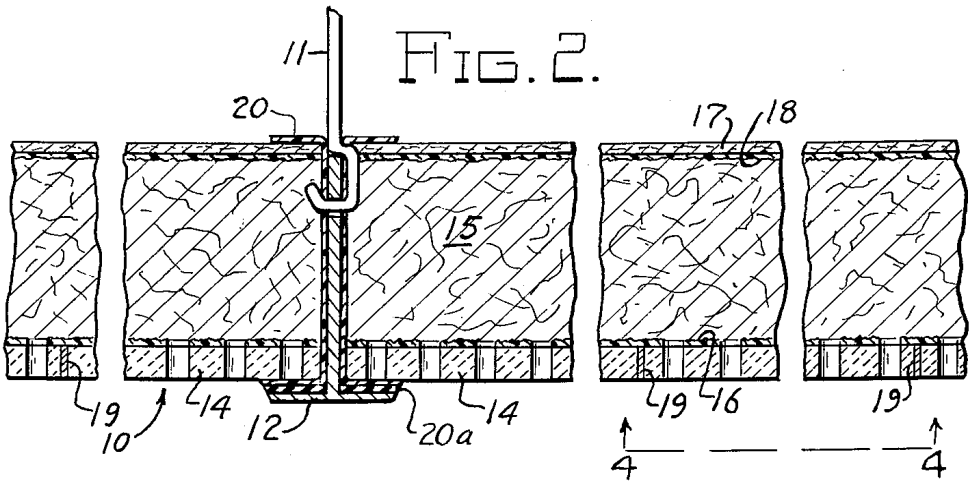

INVENTORS
Roy E. Jordan Jr.
Howard D. Mays
BY Karl M. Claus

ATTORNEYS

ACOUSTICAL PANEL

Filed Nov. 17, 1958 2 Sheets-Sheet 2

FIG. 3.

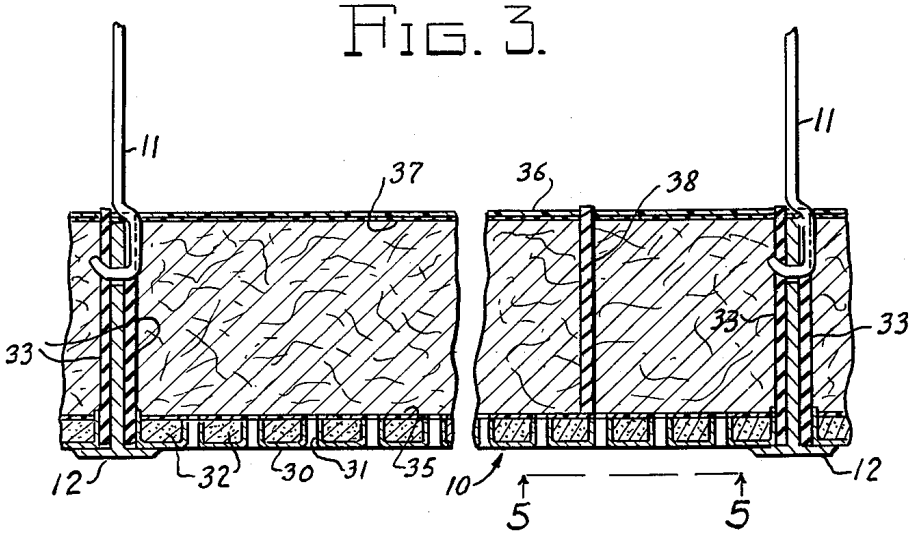

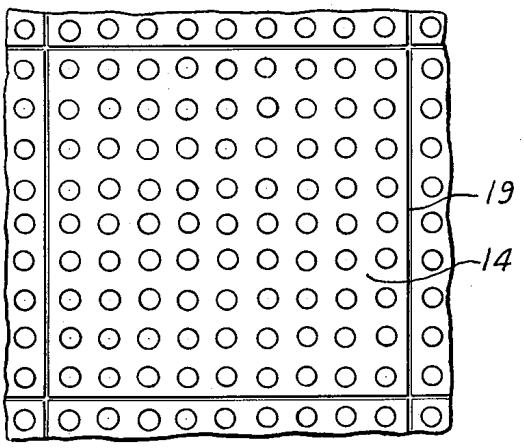

FIG. 4.

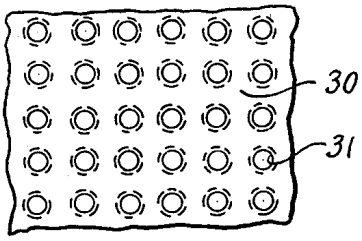

FIG. 5.

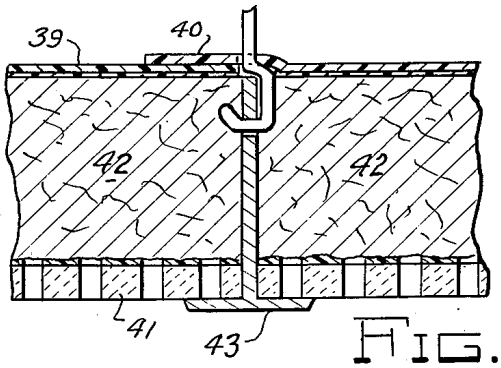

FIG. 6.

INVENTORS
Roy E. Jordan Jr.
Howard D. Mays
BY Karl M. Claus
ATTORNEYS

United States Patent Office

3,084,402

Patented Apr. 9, 1963

1

3,084,402
ACOUSTICAL PANEL

Roy E. Jordan, Jr., Howard D. Mays, and Karl M. Claus, Zanesville, Ohio, assignors to The Mosaic Tile Company, Zanesville, Ohio, a corporation of Ohio

Filed Nov. 17, 1958, Ser. No. 774,177
13 Claims. (Cl. 20—4)

This invention relates to acoustic insulating and absorbing panel configurations for the reduction and control of air-borne noise.

The primary object of the invention is to provide a panel of material having a finished surface of high decorative value and good sound absorbing qualities and at the same time having an excellent acoustic insulating value, the panel being useful for any perimetrical enclosure, and being particularly advantageous for use in ceilings.

It is recognized that light weight, open materials, such as low density glass fiber blankets or pads, can be made to act as very good sound absorbers. The art has recognized that a material which may be a good sound absorber may be, and usually is, a poor sound insulator. Porous materials or other types of sound absorbing treatment can reduce somewhat the level of noise after it is transmitted into a room; but they do not provide the most effective means for preventing its initial entry.

It is also well known that noise originating in one room is transmitted to an adjoining room either through openings or by the diaphragmatic action of the partition between the rooms. In modern buildings in which the partition between rooms may be movable, or temporary, or of the non-load bearing type, the most important path of transmission may be over the top of the partition. The partition itself can be carefully designed against diaphragmatic action, the doors can be tightly sealed and the fit of the partition to the floor and to the permanent walls can be made acoustically tight to eliminate flanking paths. The real problem thus narrows down to a consideration of the sound transmission properties of the ceilings in the room in which the noise originates and the ceiling in the adjoining room to which it propagates.

Modern structures of the non-load bearing wall or partition type usually utilize a dropped or false ceiling so that the space above it is available for ducts, pipes and conduits. A dropped or false ceiling comprising merely a layer of acoustic absorbing material, such as acoustic tile, for example, is ineffective against the transmission of noise out of that room. While the room may itself be so quiet that a normal conversation can be carried on in it pleasantly, the conversation also can be heard very readily in the next room. This is because the sound attenuation through the ceiling of the source room, along the open path above the partition, and through the ceiling of the second or termination room is very low.

In the consideration of the acoustic transmission properties of ceiling or wall panels it has been customary to consider any material which is acoustically transparent, such as the usual perforated facing board or pan, as making no significant contribution to acoustic insulation. Further, the transmission loss of a sound absorbing material is very low and only increases directly in proportion to its thickness. For example, the transmission loss of rock wool having an apparent density of five pounds per cubic foot is about 2 db per inch of thickness at 500 cycles. In order to achieve a reasonable transmission loss, it would be necessary to employ an uneconomic and impractical thickness of wool, say 10 inches or more. Thus a panel comprising the usual thin, acoustically transparent, perforate facing backed by a layer of sound

2

absorbing porous material would be expected to have, and does have, a very low transmission loss and is unsuitable for ceiling structures in buildings of the type described above.

At most frequencies the transmission loss of a septum or diaphragm follows the laws governing the transmission loss of a rigid wall or partition. In this respect, then, according to present published data, the transmission loss of a septum or diaphragm would depend for all practical purposes on its mass and would increase about 4–5 db for each doubling of the mass of the diaphragm or septum. Therefore, a thin diaphragm or septum would not be expected to add significantly to the transmission loss of the panel at frequencies within the usually encountered range.

The present invention is based on the discovery that a panel having a transmission loss that is many times greater than would be expected from an analysis of the acoustic properties of its components can be made by properly associating a relatively thin layer of sound absorbing material and a thin, lightweight septum with a massive acoustically transparent body. It has been found that the mass effect of the entire panel, and not only the mass of non-porous elements, should be considered in arriving at the transmission loss of sound passing through it.

An object of the invention is to provide an acoustical panel having as one of its elements a massive facing material which has desirable physical characteristics, such as ease of cleaning, color stability, controllable light reflectivity and the like and which panel has an excellent sound transmission loss. All of these physical characteristics required of the facing material are present in ceramic tile. Thus, the present invention provides a panel in which ceramic tile is preferably used as a facing material, although a weighted or heavy metal sheet, a dense heavy cementitious material, or other similarly heavy material, may be alternatively employed.

Other objects and advantages of the invention will become apparent from the following specification, reference being had to the accompanying drawings, in which—

FIG. 1 is a vertical sectional view through a building having a ceiling structure constructed in accordance with the present invention;

FIG. 2 is a fragmentary sectional view of a ceiling panel embodying a preferred form of the invention;

FIG. 3 is a similar fragmentary, vertical sectional view of a ceiling panel embodying a modified form of the invention;

FIG. 4 is an elevational view looking inwardly on the line 4—4 of FIG. 2;

FIG. 5 is a view similar to FIG. 4 but taken from the position indicated by the line 5—5 of FIG. 3; and

FIG. 6 is a view similar to FIG. 3 showing a ceiling panel embodying another modified form of the invention.

Referring to the drawings, and particularly to FIG. 1 thereof, the present invention is shown as embodied in a ceiling panel to reduce the sound transmission between rooms A and B. These rooms are separated by a partition C which is carried on a floor D. The roof of the building or the floor above floor D is designated E. New office buildings, schools and similar structures are now being constructed with what has become known as a "modular" wall construction. In these buildings the walls are non-load bearing and are built to touch a permanently installed but dropped ceiling and it is possible to rearrange the partitions or walls between rooms in almost any desired manner. Space above the ceiling is provided for electricity, heating and ventilating ducts, water conduits and the like. At the present time the acoustical materials which are used in these ceilings do not ade-

quately prevent the sound transmission from one office space or room into the next.

In the drawings, the permanently installed ceiling is designated generally 10 and this is suspended from the roof or upper floor by any suitable means such as hangers 11 terminating in T-bars 12. Thus the ceiling 10 cooperates with the roof or upper floor E to form a plenum space 13 in which the conduits, pipes, etc., above mentioned, are disposed. In most instances the plenum space 13 has a depth of at least 10″ which therefore forms an air space behind any acoustical ceiling that might be suspended from the hangers 11.

The preferred form of the invention is shown in somewhat larger scale in FIG. 2. As there indicated the ceiling panel 10 comprises a massive facing layer 14, an intermediate fibrous sound absorbing layer 15 adhered to the facing layer 14 by a layer of adhesive 16, and a septum 17 adhered to the back of the fibrous mass 15 by a layer of adhesive 18. Each of the elements of the panel will be subsequently described in more detail.

The facing layer 14, in the preferred form, comprises ceramic tiles cemented or adhered together in side-to-side relationship to form a massive continuous ceramic facing panel. The edge-to-edge cementing or adhesion of the tiles, indicated at 19 in FIG. 2, forms a unitary structural body of any desired size. Any suitable cement may be employed. For example, the tiles may be adhered by the use of a frit applied thereto and subsequently fired or an organic cement such as an epoxy cement may be used. Such materials when properly applied will give a bond between adjacent tiles that is as strong as the tiles themselves. Thus 4′ x 8′ sheets of the ceramic tiles can easily be fabricated and utilized in the ceiling panels.

In a preferred form, each of the ceramic tiles is a modular 4 inches square, 5/16″ thick, and is perforated with 3/16″ diameter holes on 7/16″ centers. There are thus 81 holes per tile which results in about 14% open area which makes the tile acoustically transparent in the range of frequencies up to about 1000 cycles, with increasing reflection beyond that frequency.

The open area of the tile could, of course, be achieved by utilizing an equivalent number and spacing of slots, if desired. Some enhancement of the absorptive effect of the blanket 15, hereinafter described, is obtained by the cylindrical perforations in the thick tile which result in a dynamic resonator effect at frequencies in the range of 500 to 1000 cycles since the hole depth is considerably greater than its diameter.

Ceramic tile is, of course, a massive material when utilized in thicknesses of 1/4″ and over in that its weight per square foot is high. The weight of the 5/16″ tile is about 2¾ lbs. per square foot. The thickness used in the preferred form is substantially in excess of the thickness of the tile that would be required merely for the structural support of the remainder of the elements of the panel. The ceramic tiles have, of course, many other physical properties which ideally suit them for use as a ceiling material. The tiles are easy to clean, do not absorb odors or moisure and do not require painting or other surface treatment.

Adhered to the rear surface of the massive facing layer 14, the present invention utilizes a sound absorbing blanket 15 which may be of any suitable depth and density. The sound absorbing characteristics of the blanket can be changed in accordance with known criteria, and follow very closely the characteristics that would be expected from any blanket of the same material and thickness similarly mounted, except that there is some enhancement due to the dynamic resonator effect of the perforated facing layer 14 at some frequencies. Measurements show that the blanket 15 is more effective when used with the facing layer of tile than without at frequencies in the 500–1000 cycle range.

In the preferred embodiment of the invention the fibrous layer 15 comprises a glass fiber board having an apparent density of 6 lbs. per cubic foot, and the layer is 1¾″ thick.

The sound absorbing layer 15, which is illustrated as fibrous, is a unitary, intersticed mass and is adhered to the facing layer and septum as a unit possessing structural integrity in that adhesion of its surface components, for example, the surface segments of the fibers, to either the facing layer or the septum adheres the entire layer 15 thereto. The preferred embodiment is glass fiber wool, densified by compression and the fibers bonded together by a binder to form a substantially stiff, at least semi-rigid, boardlike mass. The stiffness of such sound absorbing materials, of course, depends upon their thickness, constituents and density.

Continuously adhered to the rear face of the fibrous blanket 15, the septum 17 may take several different forms. It is only necessary that the septum be continuous in its area and that it be effectively continuously adhered to the fibrous layer 15 which, in turn, is adhered to the facing layer 14. One form of septum that has been successfully used comprises a 1/8″ sheet of compressed and bonded wood fibers such as is commercially kown as "Masonite."

In a ceiling made up of a number of panels abutted against each other in edge-to-edge relationship, it is preferable to assure that there is no leakage path for sound through the edge of a panel or between the edges of a panel and its supporting member. Closure of this edge leakage path can be readily accomplished by taping the exposed sides of the fibrous blanket 15 with an air impervious sheet material 20 such as cloth, metal foil or plastic having an adhesive on one side. Further, the air leakage around the taped panel may be reduced by using a compressible substance between the bottom of the ceramic tile and the horizontal face of the T-bar, as indicated at 20*a* in FIG. 2. This will effectively prevent air leakage, and thus sound leakage, past the sides of the panel into the plenum space 13.

A measurement of the sound absorption coefficient of the panel so far described comprising the perforated ceramic massive facing layer, the adhered 1¾″ glass fiber blanket and the adhered 1/8″ "Masonite" septum shows the following results:

Sound Absorption Coefficient at frequency of—						N.R.C.
125	250	500	1,000	2,000	4,000	
.25	.64	.95	.88	.56	.41	.76

Panel Thickness: 2 3/16″.

Panel Construction: 4″ square tile; backed with 1¾″ thick compressed glass fiber mat having 6 lbs./cu. ft. density; backed with 1/8″ tempered "Masonite."

Tile Specifications: Ceramic 4″ square; 5/16″ thick; perforated with 3/16″ dia. holes, 7/16″ on centers, 81 holes per tile, 14% open area.

Test Mounting: Acoustical Materials Association Mounting No. 4.

While the sound absorption coefficient is not unexpected, it has been found that a panel constructed in accordance with the invention shows a sound transmission loss that is greatly in excess of the sound transmission loss of its various components. It will be appreciated, of course, that the transmission loss of sound energy through the perforated ceramic tile is virtually zero. It is also understood that the transmission loss through the glass fiber blanket is also very low, being in the neighborhood of 2 db per inch of thickness. The transmission loss through the septum material above would also be very low, especially if metal foil or sheet plastic were used. While each of the components of the panel would

appear to have a very low transmission loss, it has been found that when they are associated with each other in accordance with the teachings of the present invention the transmission loss of the panel is very high. Tests on a panel comprising a 4 foot square specimen gave the following results:

Four foot square specimen: Acoustic tile panels, 24" x 48", comprised of 4" square Acoustic Wall Tile 5/16" thick, perforated with 3/16" dia. holes, 7/16" o.c., 81 per tile (14% open area), backed with 1¾" thick "Fiberglas" board, 6 lbs./cu. ft. density and ⅛" tempered "Masonite." Specimen comprised of two panels with joint simulating that of an exposed-T suspension system, outer periphery clamped in place without caulking.

Frequency in c.p.s.[1]	Attenuations in decibels [2]
125	27
177	33
250	19
354	22
500	25
707	27
1000	28
2000	36
4000	38
Average Attenuation	28.1

[1] Mid-frequency of warble-tone.
[2] Differences between integrated sound pressure levels measured in reverberant source room and semi-anechoic termination enclosure, determined in accordance with ASTM Standard E90-55.

The attenuation of sound originating in room A would be expected to approximate 28 db before its entry into the plenum space 13. A similar attenuation would be expected between the plenum space and room B in connection with the re-entry of the sound. Thus the attenuation from room A to room B may be conservatively expected to exceed 40 db, and the acoustic insulation derived from the ceiling structure would thus equal or surpass the acoustic insulation derived from the partition between the two rooms. At the present time partition manufacturers strive to achieve a 40 db transmission loss, and consider this to be acceptable.

To reduce the reverberation of sound in the plenum space after its entry into that space from room A, for example, it may be desirable to add an acoustic absorbing material on the face of the roof or floor body E as indicated at 21 (FIG. 1). This will depend on the nature of the installation and such factors as the depth of the plenum space.

In order to prevent the transmission of sound longitudinally through the panel a secondary septum extending at right angles to the facing layer and indicated at 22 in FIG. 1 should also be used. This septum 22 should be located immediately over the partition C. The placing of this secondary septum 22 requires only that a slot be made from the rear of the panel through the primary septum 17 and fibrous layer 15 and that a piece of "Masonite" or similar material be coated with an adhesive substance and forced into the slot. This will give ample adhesion between the secondary septum 22 and the fibrous layer 15.

FIGS. 3 and 5 show a modified form of the invention comprising a metal pan 30 having drawn or formed, inwardly extending cylindrical hollow nipples 31 which correspond in form and effect to the perforations in the tile of FIGS. 1 and 2. Additional mass can be imparted to the metal pan either by filling the space between the inwardly extending nipples 31 with a heavy material such as plaster 32 or by increasing the gauge of the metal of which the facing layer 30 is formed. The resulting facing layer should have, for comparable results, substantially the same mass as the layer of ceramic tile 14 previously described.

FIG. 3 also shows the use of gasketing material 33 along the vertical leg of the T-bar suspension and adhered to the T-bar. This material 33 is preferably put under compression by the setting of the ceiling panels so that the possibility of transmitting sound through the space between the T-bars and the panel is reduced to a minimum.

In the form shown in FIG. 3 the fibrous material 34 is adhered to the facing layer 30 by a layer of adhesive 35 and a continuous septum 36 is provided which is adhered to the back face of the fibrous material layer 34 by a layer 37 of suitable adhesive. As in the case of the form shown in FIGS. 1 and 2, a secondary septum 38 over the partition should be employed.

In the modification shown in FIG. 6, the septum is designated 39 and comprises a layer of metal foil or a layer of plastic material. In this form the metal foil or plastic sheet is overlapped from one panel section to the next as shown at 40. This will also effectively prevent transmission of sound past the edges of the septum and into the plenum space. As in the earlier embodiments, each panel comprises a layer of facing material 41 to which is continuously adhered a layer of fibrous material 42 to which the septum 39 in continuously adhered. Adjacent panels are similarly supported by T-bars 43.

As used herein and in the below claims, the term "continuously adhered" means that the adhesive employed contacts the surface of the facing layer between the perforations and contacts the surface segments of the sound absorbing material and the adhesive which continuously adheres the septum also contacts the surface segments of the sound absorbing layer, both adhesions extending over the entire areas involved.

An acoustical panel according to the invention as above described possesses the transmission loss characteristics of a rigid partition of an equivalent or greater mass similarly jointed and at the same time possesses accoustic absorbing properties equivalent to or greater than a fibrous blanket of similar thickness. The usual rigid partition has of course a very low noise reduction coefficient, and the usual fibrous blanket has, of course, a very low transmission loss.

What we claim is:

1. An acoustical panel having a high transmission loss and high noise reduction coefficient, said panel comprising, a perforate, substantially sound transparent, facing layer, the perforations therein having a total area in excess of ten percent of the total area of said layer and consisting of a rigid body having a mass per unit of area substantially in excess of that required for structural support of the remainder of the elements of the panel, a structurally integral layer of sound absorbing material, a discrete thin layer of adhesive continuously adhering said layer of sound absorbing material to the back surface of said facing layer, a continuous, air-impervious septum consisting of a sheet of material having independent structural unity, and a discrete thin layer of adhesive continuously adhering said septum to the back surface of said sound absorbing layer.

2. An acoustical panel in accordance with claim 1 in which said sound absorbing layer is fibrous material.

3. An acoustical panel in accordance with claim 1 in which said sound absorbing layer is a board-like mass of densified intersticed glass fiber wool.

4. An acoustical panel in accordance with claim 1 in which said facing layer consists of a sheet of perforated ceramic tile.

5. An acoustical panel in accordance with claim 1 in which said facing layer consists of a massive sheet of perforated metal.

6. An acoustical panel in accordance with claim 1 in which said facing layer consists of a sheet of cementitious material having independent structural unity.

7. An acoustical panel in accordance with claim 1 in

which said septum consists of an air impervious layer of compressed and bonded wood fibers.

8. An acoustical panel in accordance with claim 1 in which said septum consists of a thin, air impervious flexible sheet metal.

9. An acoustical panel in accordance with claim 1 and a secondary air impervious septum extending normal to the first said continuous septum through said layer of sound absorbing material.

10. An acoustical panel in accordance with claim 1 and an air impervious sheet material around the edges of said panel for preventing the leakage of sound there around and therethrough.

11. An acoustical ceiling structure having a transmission loss in excess of 20 db, and a noise reduction coefficient in excess of 0.70 comprising a T-bar suspension system and acoustical panels supported thereby, each of said panels comprising a perforate facing layer of ceramic tile, the perforations therein having a total area in excess of ten percent of the total area of said tile and a mass and rigidity substantially in excess of that required for structural support, said facing layer lying on the horizontal elements of the associated ones of said T-bars and serving as the structural element of said panel, a structurally integral layer of sound absorbing fibrous material, a discrete thin layer of adhesive continuously adhering said layer of sound absorbing material to the back surface of said facing layer, a continuous, air impervious septum consisting of a sheet of material having independent structural unity, a discrete thin layer of adhesive continuously adhering said septum to the back surface of said layer of sound absorbing material, and means at the edges of each of said panels for preventing the leakage of sound through said edges and between said edges and said T-bars.

12. An acoustical panel having a high transmission loss and noise reduction coefficient, said panel comprising, in combination, a facing layer consisting of a sheet of substantially sound transparent, perforated, ceramic tile, the perforations therein having a total area in excess of ten percent of the total area of said layer and the sheet being rigid and having a mass substantially in excess of that required for structural support, a layer of

sound absorbing material consisting of a densified board-like mass of intersticed glass fiber wool, a discrete thin layer of adhesive continuously adhering said sound absorbing layer to the back surface of said facing layer with the adhesive contacting the surface segments of said sound absorbing material and the back face of said facing layer between the perforations thereof, a continuous, air impervious septum and a discrete thin layer of adhesive continuously adhering said septum to the back surface of said sound absorbing layer with the adhesive contacting the surface segments of the fibers thereof and the surface of said septum over the entire area involved, said septum being fabricated from independently structurally unitary material.

13. An acoustical panel according to claim 12 in which the septum is a thin, lightweight, air impervious flexible sheet metal and the septum also extends around the edges of at least the sound absorbing layer and is adhered to the surface segments of the fibers thereof.

References Cited in the file of this patent

UNITED STATES PATENTS

1,910,628	Nash	May 23, 1933
1,926,679	Kellogg et al.	Sept. 12, 1933
1,994,439	Slidell	Mar. 12, 1935
2,045,313	Roos et al.	June 23, 1936
2,077,713	Ross et al.	Apr. 20, 1937
2,132,032	Jacobsen	Oct. 4, 1938
2,177,393	Parkinson	Oct. 24, 1939
2,200,382	Clarke	May 14, 1940
2,350,513	Leadbetter	June 6, 1944
2,450,911	Park et al.	Oct. 12, 1948
2,692,219	Slayter et al.	Oct. 19, 1954
2,767,440	Nelsson	Oct. 23, 1956
2,779,979	Sundelin et al.	Feb. 5, 1957
2,802,764	Slayter et al.	Aug. 13, 1957
2,824,618	Hartsfield	Feb. 25, 1958
2,829,790	Collings	June 24, 1958

FOREIGN PATENTS

588,498	Great Britain	May 22, 1947
1,004,606	France	Nov. 28, 1951
524,931	Belgium	Dec. 31, 1953