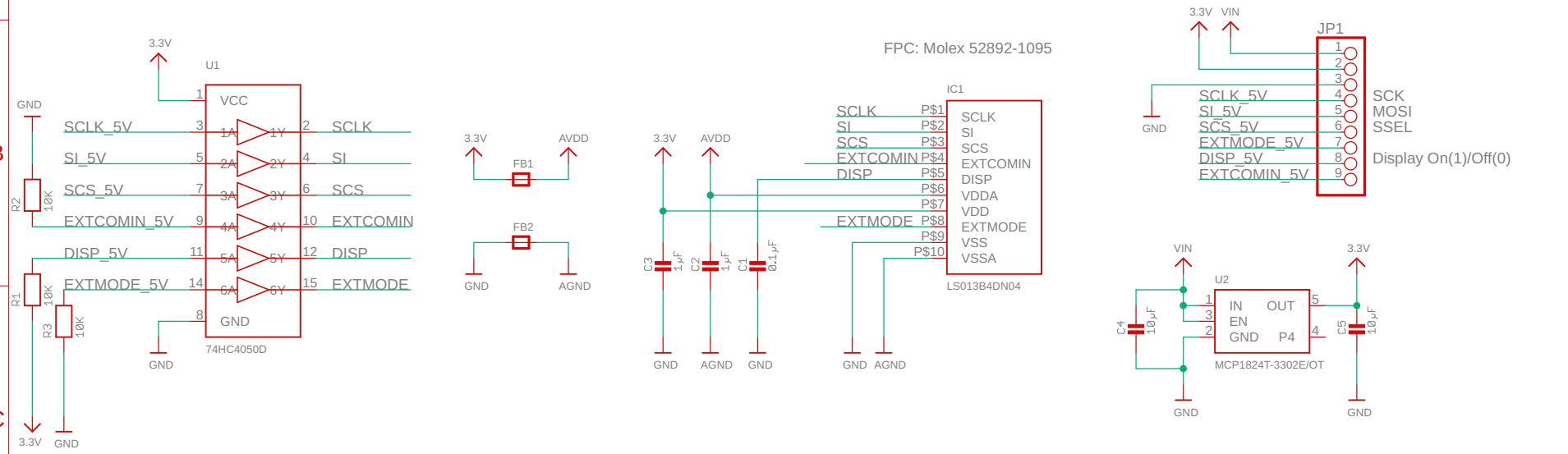

ISSUE	ADAFRUIT INDUSTRIES	© 2013
DRAWN KTOWN	TITLE	REV A
CHECKED KTOWN	DATE 9/6/2021 10:01 PM	DRG Nº >DRGNO
DATE >DATE	FILE: Adafruit_SharpMemoryDisplay	PAGE: 1/1