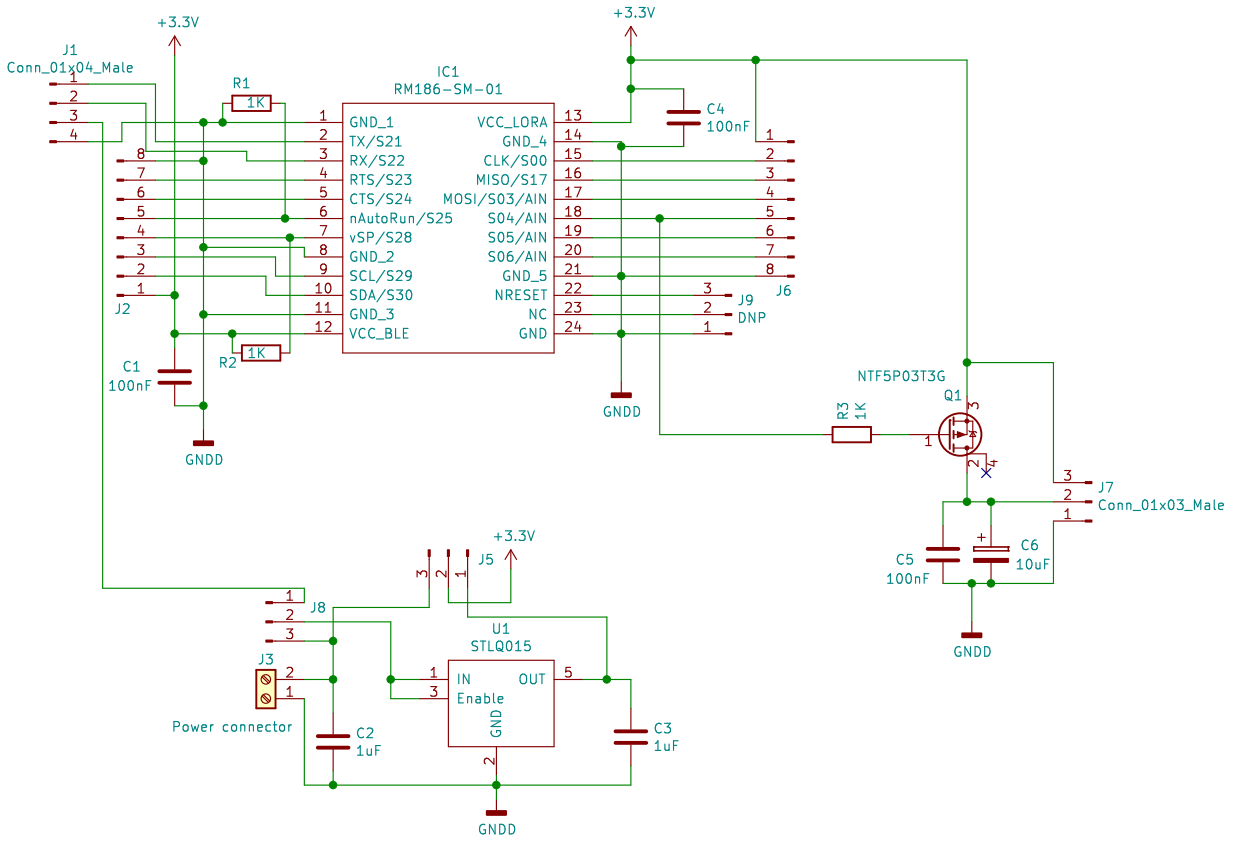

H1 MountingHole
H2 MountingHole
H3 MountingHole
H4 MountingHole

Design © Copyright 2019 by
The-Box Development

Sheet: /
File: gen-node.sch

Title: Generic node

Size: A4	Date: 2019-07-20	**Rev: 1.0**
KiCad E.D.A. eeschema (5.0.1)-3		Id: 1/1