BA01014@umbc.edu

Lab 9

To: Nafisa Tasnim

From: Isaac Boteler

Date: 04/20/2026

Subject: DC Multi-meter Functionality with Arduino

BA01014@umbc.edu

Introduction:

In this lab we are to implement two kinds of functionality commonly found in multi-meters with our Arduino. In Task 1 we will construct a continuity checker using the Arduino power supply, this device will show if there is a connection between two points via igniting an LED. In Task 2 we will construct a DC voltage measurement device with the output displayed on our LCD module. For this task, we will demonstrate the voltage across an LED (Case A) and the voltage across a resistor (Case B).

Task 1:

Circuit Explanation:

A voltage applied to a continuous resisitive circuit will induce some current flow. From this principle we derive our method to test for continuity. Using one wire connected to our Arduino's Vcc and another connected to a resistor which then goes through an LED which itself goes back to the Arduino's Gnd we will find if some area is continuous or not by connecting one end to the first wire, and the other to the second wire. If continuous, our LED will turn on otherwise it will remain off. A continuous region is usually defined to be of low resistance (0 – 50ohms) while a non-continuous region is usually defined to be of infinite resistance. Due to the nature of the LED, the more continuous a region is (the lower the resistance) the brighter the LED will become.

Figure 1 demonstrates this concept. If Wire 1 and Wire 2 are connected with little resistance, then the LED will emit light. If Wire 1 and Wire 2 are not connected (large resistance) then the LED will not emit light.

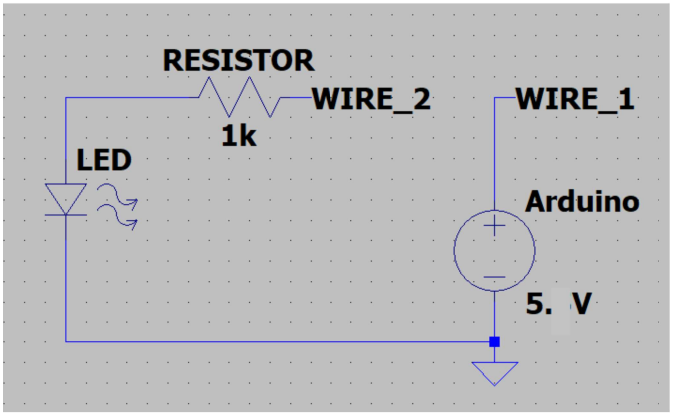

Figure 1: LTspice model of task 1 circuit

BA01014@umbc.edu

Figures 2 and 3 demonstrate this concept in action. With (1) showing continuity (little resistance) and (2) showing non-continuity (large resistance).

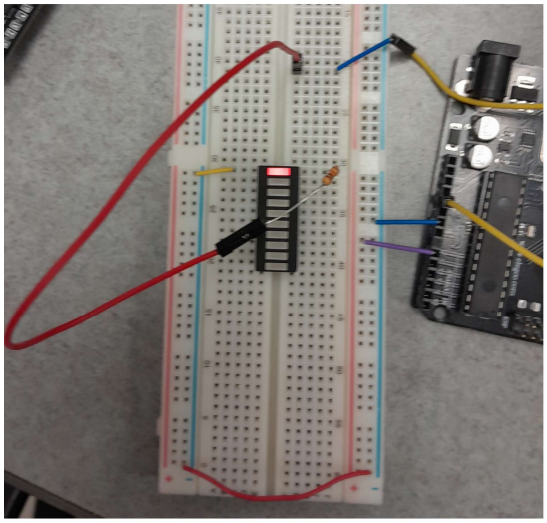

Figure 2: picture of task 1 with wires connected (continuous circuit)

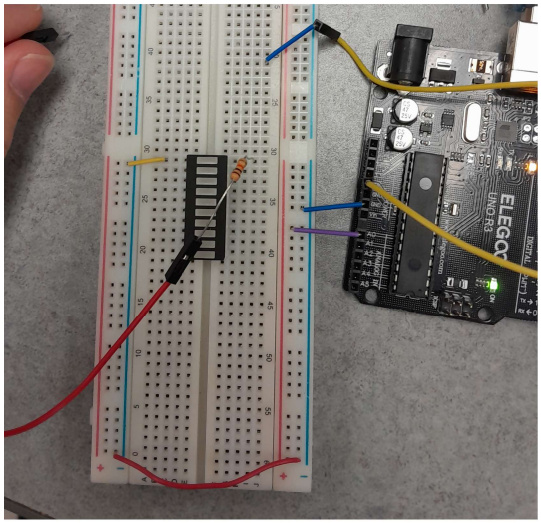

Figure 3: picture of task 1 with wires not connected (discontinuous circuit)

Task 2:

Circuit Explanation:

We have a similar resisitive circuit as in Task 1. The wires between the Arduino's Vcc and the resistors are shorted. We use the 5 Vcc from our arduino to power the LCD display. the 3.3 Vcc from our Arduino is then used to power the resistive circuit. We use the Arduino's analog ports for both the voltage measurement (input A0, A1) and LCD writing (output A4, A5).

BA01014@umbc.edu

Circuit Diagram:

Figure 4 shows both the resisitive circuit with the voltage measurement (A0, A1) and the necessary connections from the Arduino to LCD module.

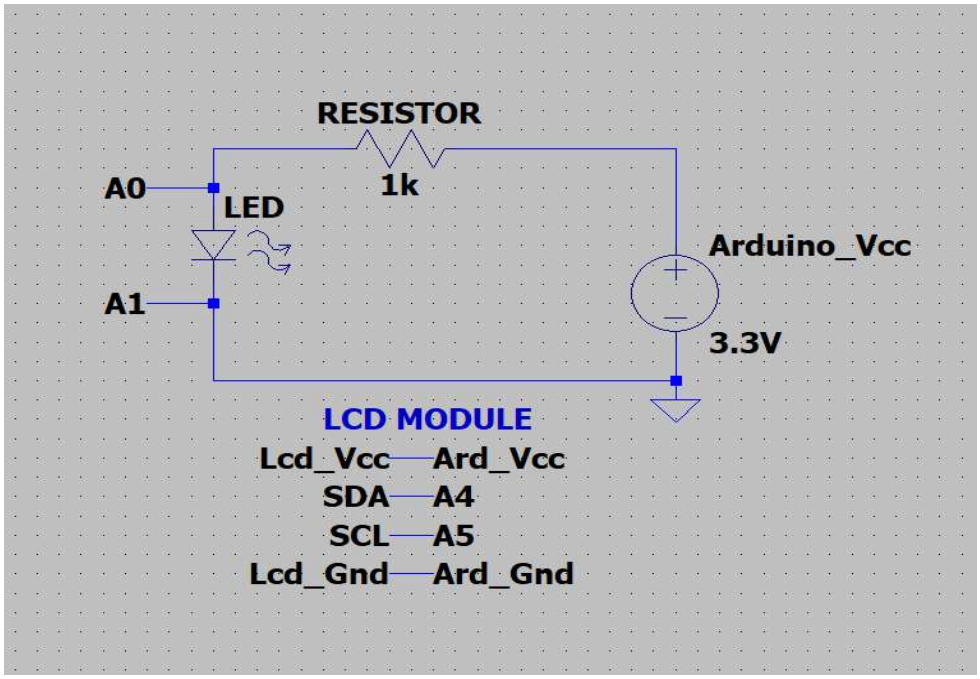

Figure 4: LTspice model of task 1 circuit for case A (NOTE Ard_Vcc = 5Vcc)

Case A:

Picture of Circuit:

Figure 5 demonstrates the circuit in action. We measure the voltage drop across the LED and display the voltage difference (1.918) on the LCD module.

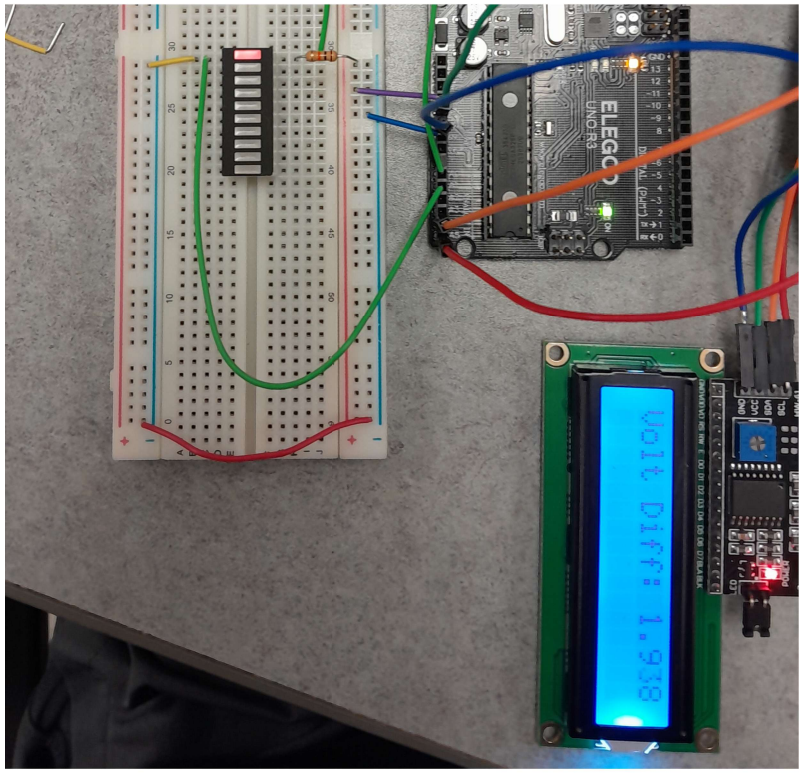

Figure 5: picture of task 2 case A

BA01014@umbc.edu

Case B:

Figure 6 demonstrates the circuit in action. We measure the voltage drop across the resistor and display the voltage difference (1.715) on the LCD module.

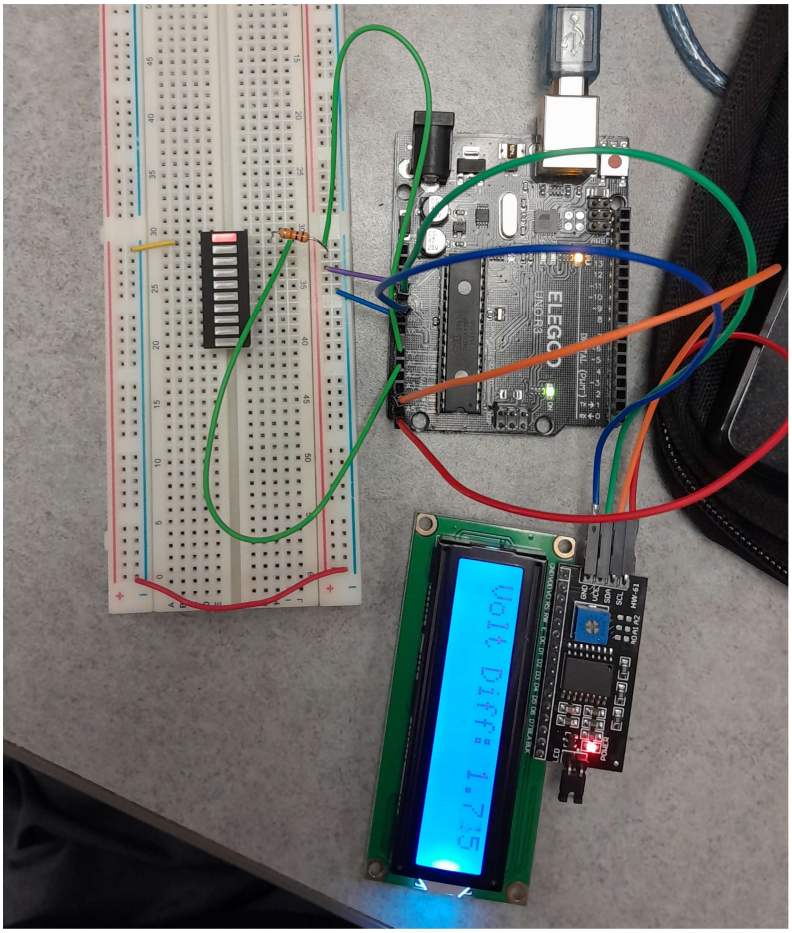

Figure 6: picture of task 2 case A

BA01014@umbc.edu

Arduino Code: (Figure 7)

```
#include <Wire.h>
#include <LiquidCrystal_I2C.h>

int voltageP = A0;
int voltageN = A1;
LiquidCrystal_I2C lcd(0x27, 16, 2);

void setup() {
  lcd.init()
  lcd.backlight();

  pinMode (voltageP, INPUT);
  pinMode (voltageN, INPUT);


  lcd.setCursor(0, 0);
  lcd.print("STARTING");
  delay(500);

}

void loop() {


  int voltage_measure = analogRead(voltageP) - analogRead(voltageN);
  float voltage_output = voltage_measure * 5.0 / 1023;

  lcd.setCursor(0, 0);
  lcd.print("Volt Diff: ");
  lcd.print(voltage_output);
}
```

Figure 7: Print of TASK 2 code

Conclusion:

The Arduino is a versatile tool that can mimic certain functionalities of the Multi-meter. We have successfully built functionality for continuity and DC voltage measurements.

Repo:

https://github.com/Gh21st/LAB_9/tree/main