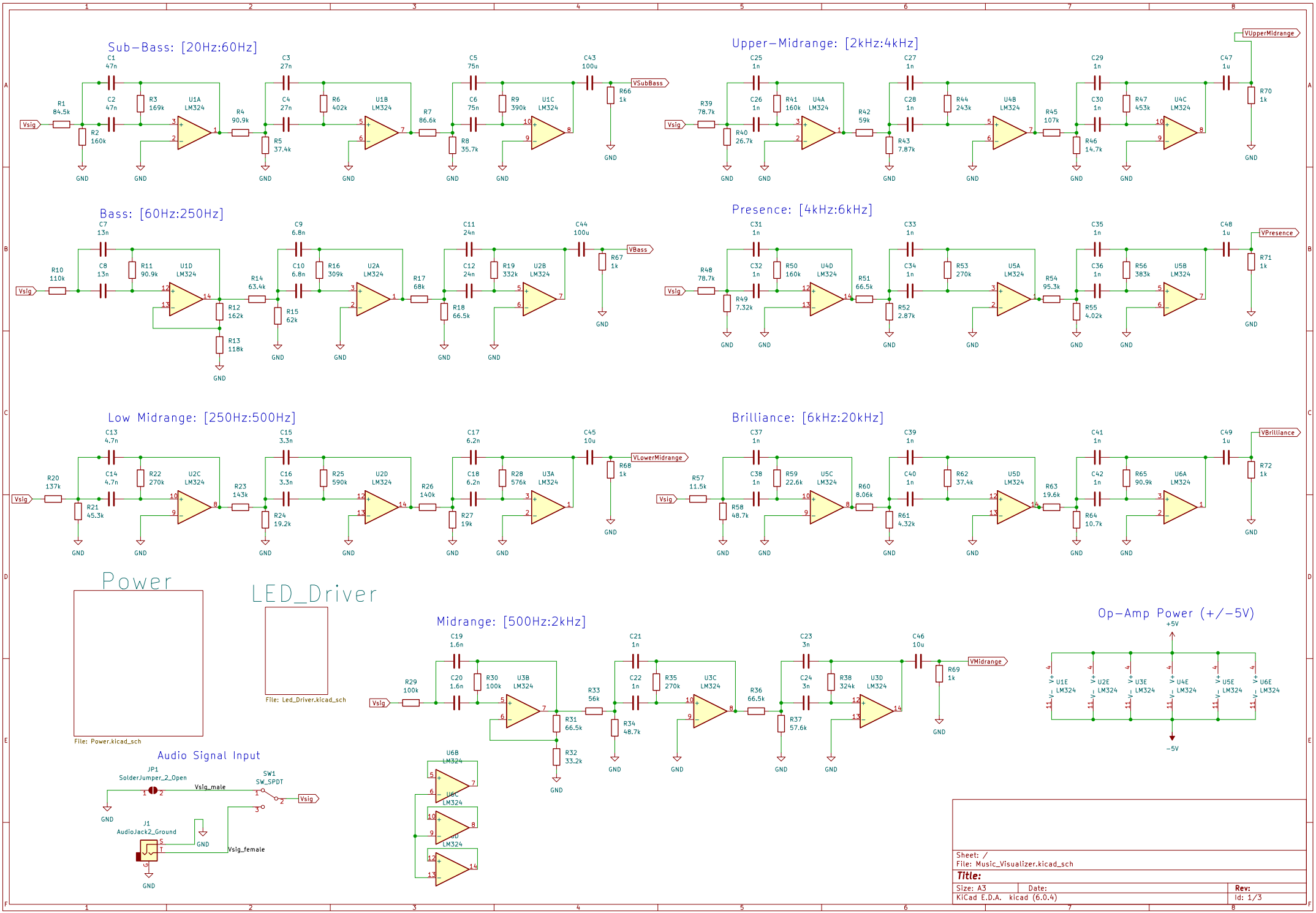
Sub-Bass: [20Hz:60Hz]
Upper-Midrange: [2kHz:4kHz]
Bass: [60Hz:250Hz]
Presence: [4kHz:6kHz]
Low Midrange: [250Hz:500Hz]
Brilliance: [6kHz:20kHz]
Power
File: Power.kicad_sch
LED_Driver
File: Led_Driver.kicad_sch
Midrange: [500Hz:2kHz]
Op-Amp Power (+/-5V)
+5V
-5V
Audio Signal Input
JP1
SolderJumper_2_Open
SW1
SW_SPDT
J1
AudioJack2_Ground
Vsig
Vsig_male
Vsig_female
VSubBass
VUpperMidrange
VBass
VPresence
VLowerMidrange
VBrilliance
VMidrange
GND
Sheet: /
File: Music_Visualizer.kicad_sch
Title:
Size: A3
Date:
Rev:
KiCad E.D.A. kicad (6.0.4)
Id: 1/3