Date:

Q1) (BCD)

W	X	Y	Z
0	0	0	0
0	0	0	1
0	0	1	0
0	0	1	1
0	1	0	0
0	1	0	1
0	1	1	0
0	1	1	1
1	0	0	0
1	0	0	1
1	0	1	0
1	0	1	1
1	1	0	0
1	1	0	1
1	1	1	0

A	B	C	D (Access)
0	0	1	1
0	1	0	0
0	1	0	1
0	1	1	0
0	1	1	1
1	0	0	0
1	0	0	1
1	0	1	0
1	0	1	1
1	1	0	0
1	1	0	1
1	1	1	1

We have Don't

AB \ CD	00	01
00	X 0	X
01	4	1
11	12	X 13
10	8	1 9

$Y = CD' + C'D$

AB \ CD	00	01
00	X	X
01	1	
11	1	X
10	1	

$Z = D'$

AB \ CD 00 01 11

Date:

we" have Don't Care at (0, 1, 2, 13, 15, 14)

AB \ CD	00	01	11	10
00	X 0	X	3	X 2
01	4	1 5	7	1 6
11	12	X 13	X 15	X 14
10	8	1 9	11	1 10

For Y

$Y = CD' + C'D$

AB \ CD	00	01	11	10
00	X	X		X
01	1			1
11	1	X	X	X
10	1			1

For Z

$Z = D'$

AB \ CD	00	01	11	10
00	X	X		X
01			1	
11		X	X	X
10	1	1		1

For x

$X = B'C' + CDB + D'B'$

Date:

AB \ CD	00	01	11	10
00	X 0	X 1	3	2 X
01	4	5	7 6	6
11	1 12	X 13	X 15	14 X
10	8	9	1 11	10

For w

$w = AB + CDA$

$w = AB + CDA$

$x = B'C + CDB + D'B'$

$y = CD' + C'D = XOR$

$z = D'$

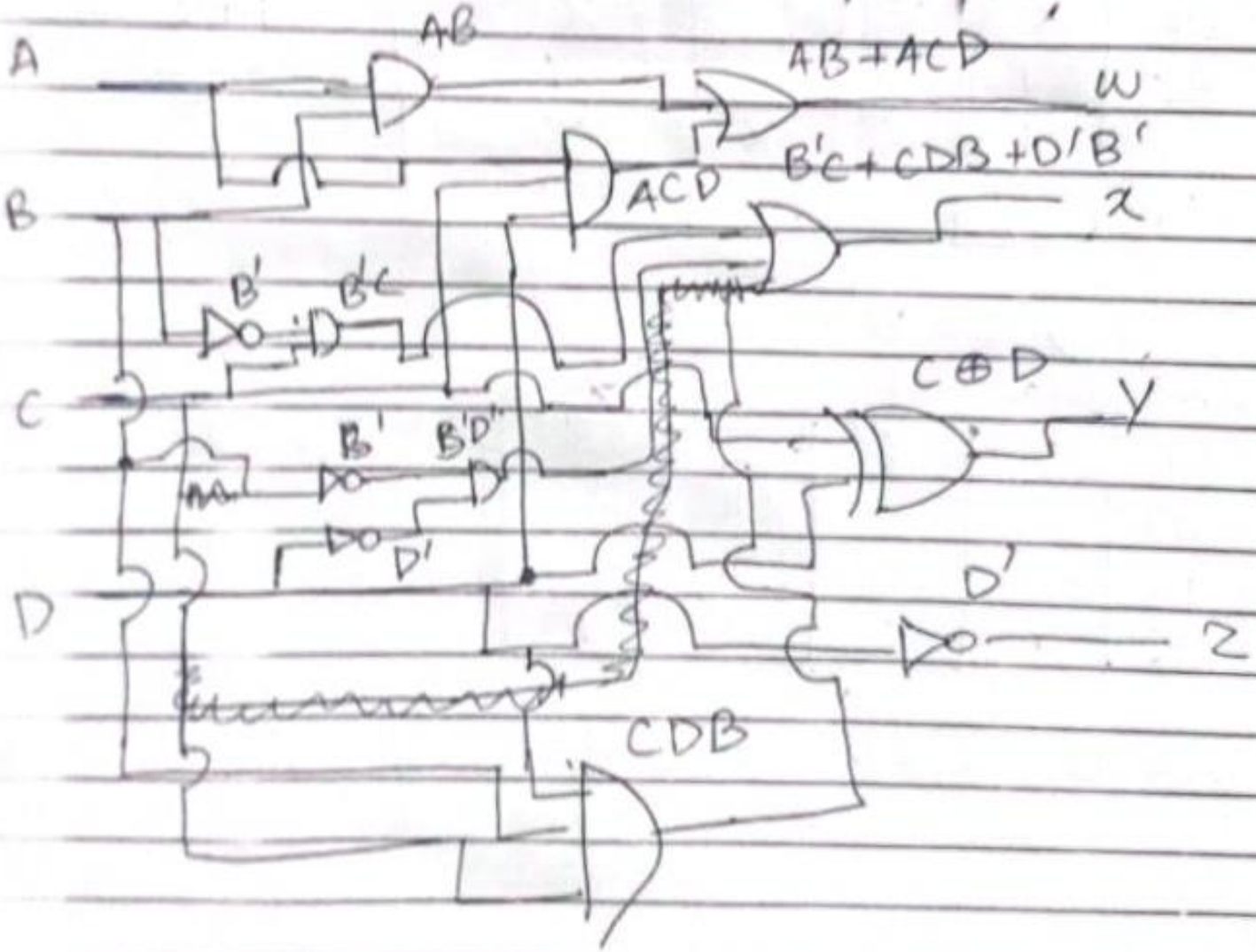

DECENT PAPER PRODUCT

Teacher's Signature:

Date:

(Q2)

A	B	C	D	G	
0	0	0	0	0	0
0	0	0	1	1	1
0	0	1	0	1	2
0	0	1	1	1	3
0	1	0	0	1	4
0	1	0	1	1	5
0	1	1	0	1	6
0	1	1	1	1	7
1	0	0	0	1	8
1	0	0	1	1	9
1	0	1	0	1	10
1	0	1	1	1	11
1	1	0	0	0	12
1	1	0	1	0	13
1	1	1	0	0	14
1	1	1	1	1	15

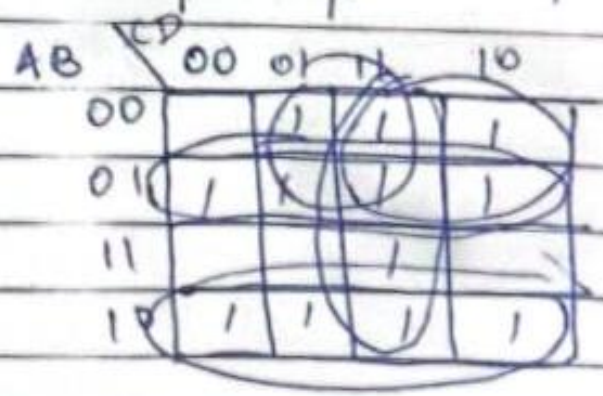

$G = AB' + A'B + CD + A'D + A'C$

$G = A \oplus B + A'(C+D) + CD$

DECENT PAPER PRODUCT

Teacher's Signature:

Date:

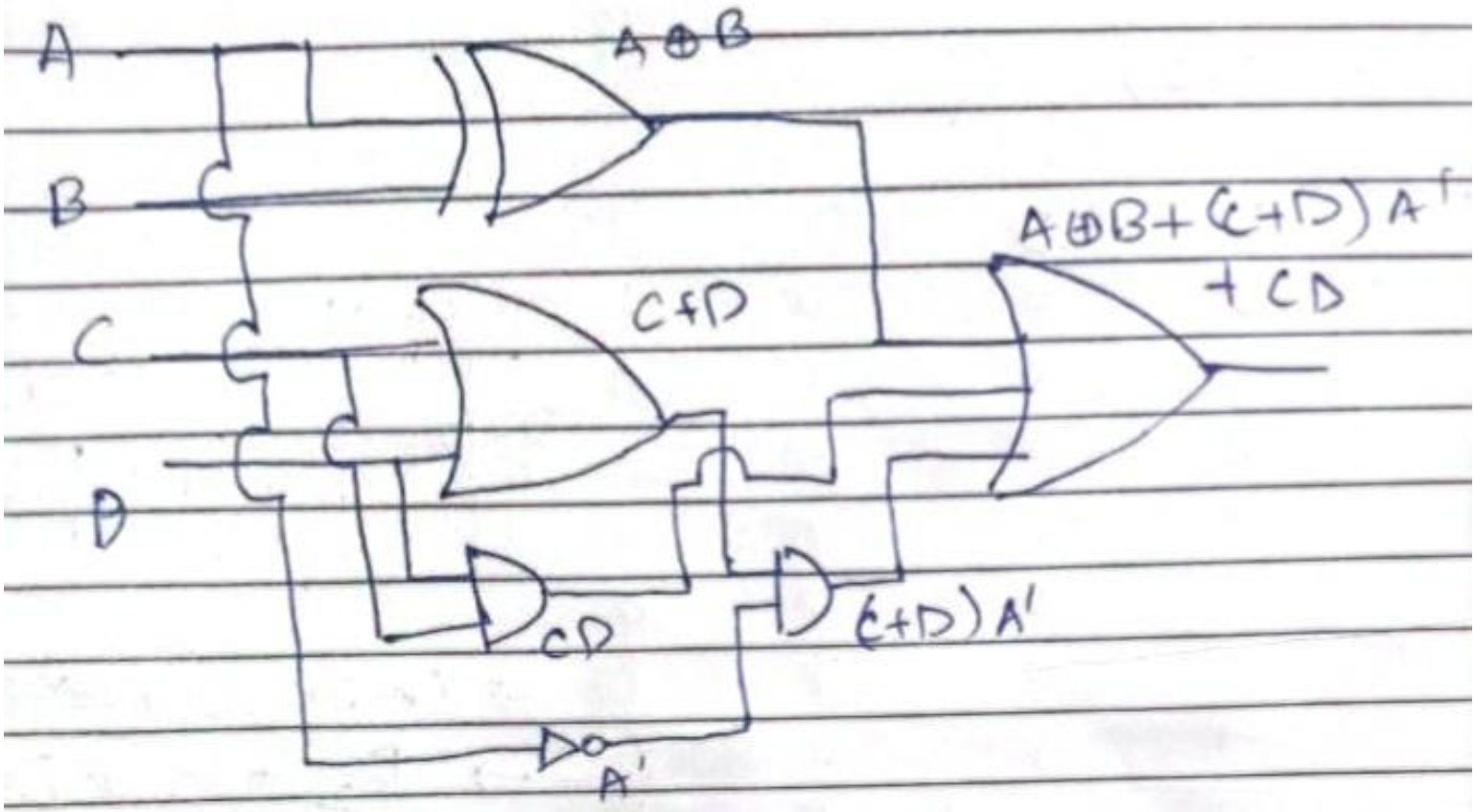

DECENT™ PAPER PRODUCT

Teacher's Signature:

Date:

Question 3)

(a)

D_2	D_1	D_0	P
0	0	0	1
0	0	1	0
0	1	0	0
0	1	1	1
1	0	0	0
1	0	1	1
1	1	0	1
1	1	1	0

KMAP

D_2 \ D_1D_0	00	01	11	10
0	1		1	
1		1		1

→ XNOR GATE

→ $D_2 \oplus D_1 \oplus D_0$

logic Diagram:-

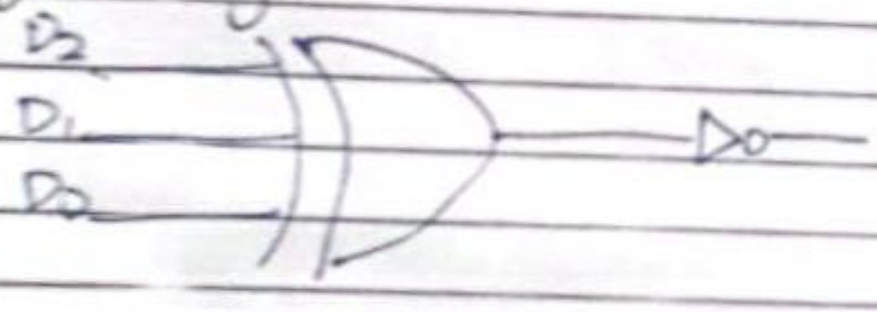

or use a XNOR Gate

DECENT PAPER PRODUCT

Teacher's Signature:

Date:

(B)

D_2	D_1	D_0	P	F	
0	0	0	0	1	0
0	0	0	1	0	1
0	0	1	0	0	2
0	0	1	1	1	3
0	1	0	0	0	4
0	1	0	1	1	5
0	1	1	0	1	6
0	1	1	1	0	7
1	0	0	0	0	8
1	0	0	1	1	9
1	0	1	0	1	10
1	0	1	1	0	11
1	1	0	0	1	12
1	1	0	1	0	13
1	1	1	0	0	14
1	1	1	1	1	15

K MAP

D_2D_1 \ D_0P	00	01	11	10
00	1		1	
01		1		1
11	1	1	1	
10	1	1		1

XNOR again

$F = \overline{D_2 \oplus D_1 \oplus D_0 \oplus P}$

DECENT PAPER PRODUCT

Teacher's Signature:

Date:

logic Diagram

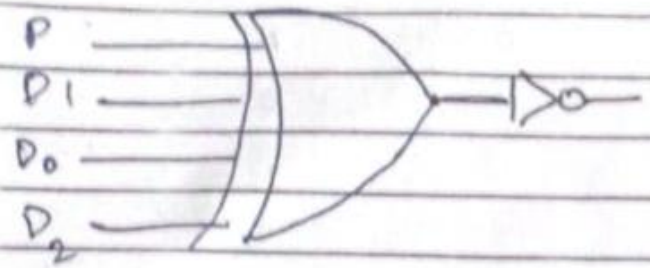

c)

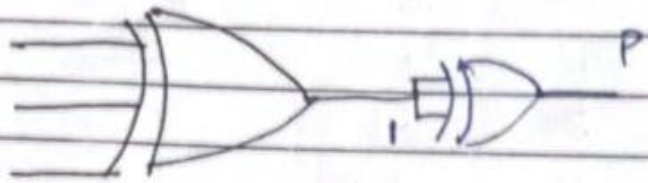

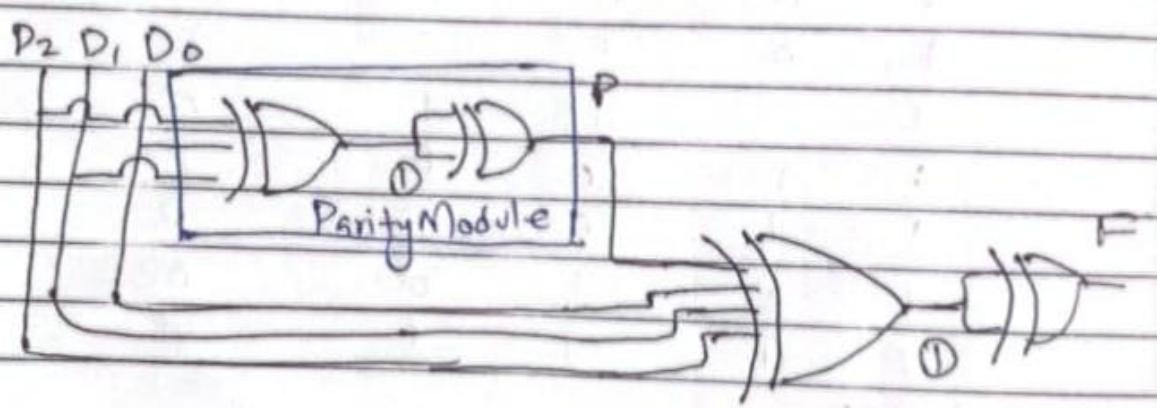

DECENT PAPER PRODUCT

Teacher's Signature:

Date:

logic Diagram

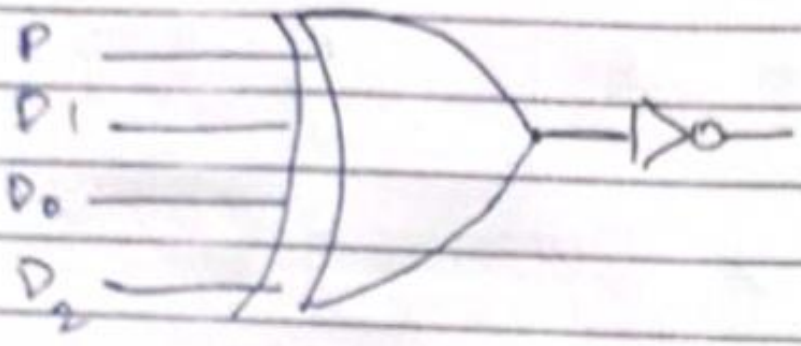

c)

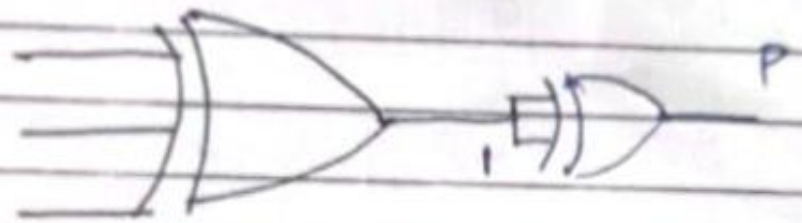

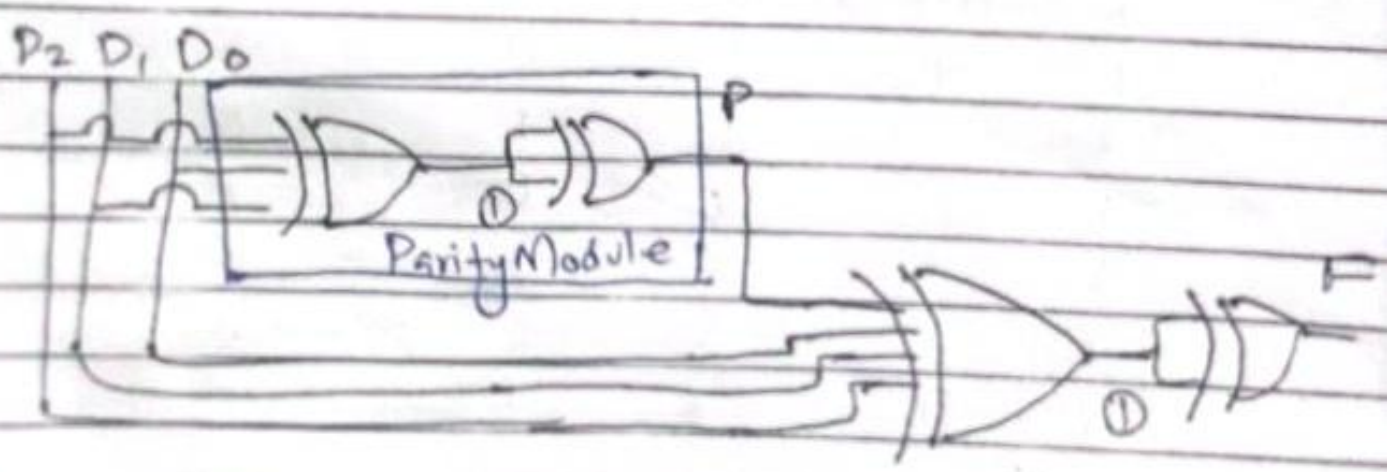

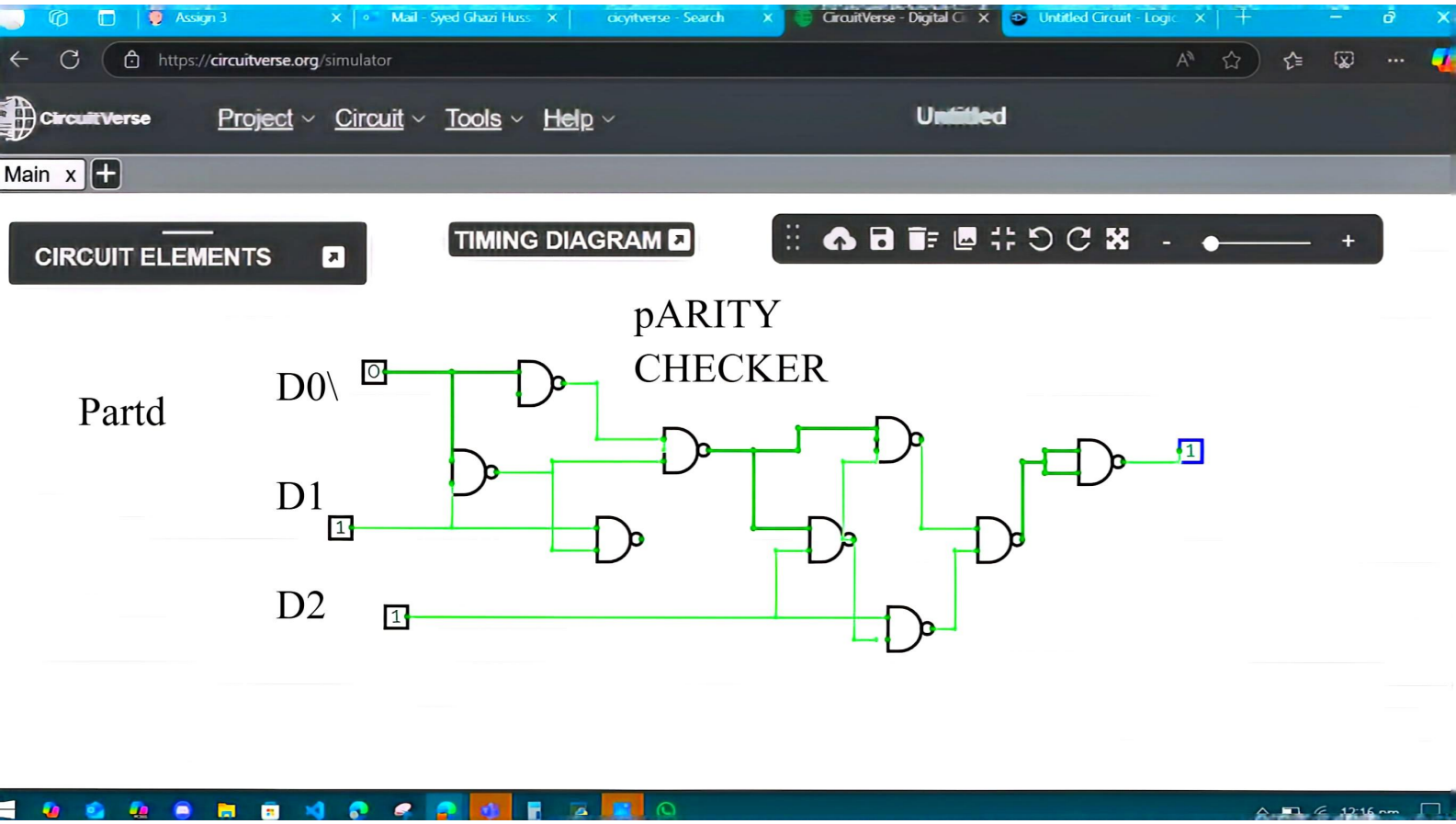
https://circuitverse.org/simulator
Project
Circuit
Tools
Help
Main
CIRCUIT ELEMENTS
TIMING DIAGRAM
pARITY
CHECKER
Partd
D0\
D1
D2
0
1
1
1

d)Test case when its f

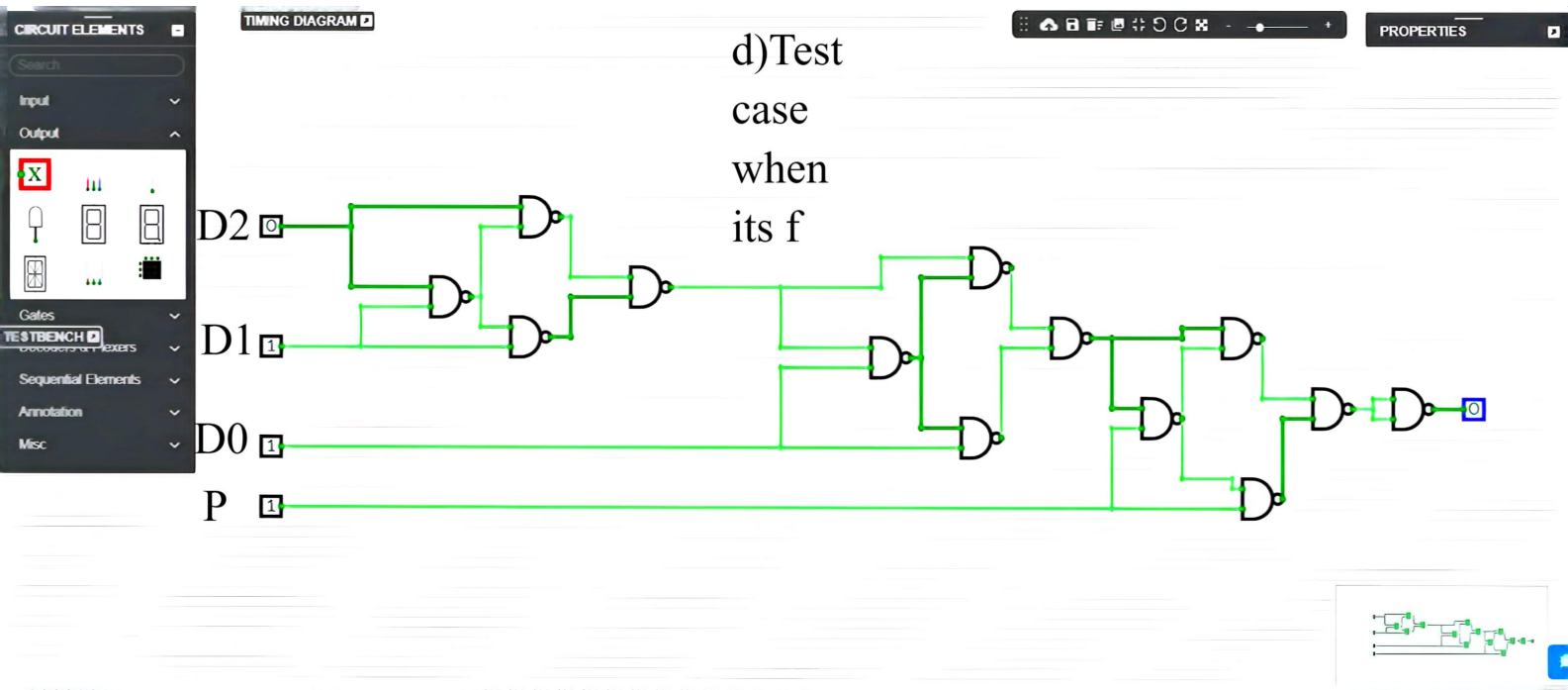

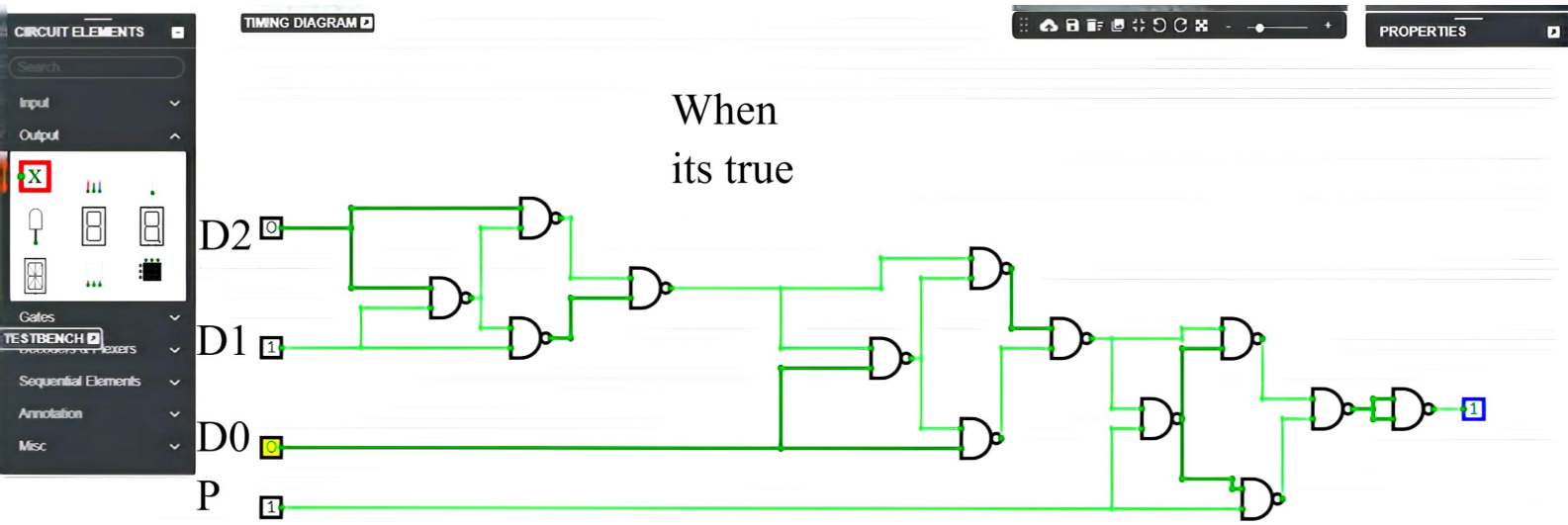
CIRCUIT ELEMENTS
TIMING DIAGRAM
PROPERTIES
Input
Output
Gates
TESTBENCH
Sequential Elements
Annotation
Misc
When
its true
D2
D1
D0
P

Date:

(e)

ADvantages:

(1) cost effective
(2) easily manufactured
(3) as we can see, we could make it just by few xor gates, so it makes lesser gate level delay, hence its quick and efficient

Disadvantages:

(1) The circuit only allows the error generated to be detected, and doesn't fix them ~~and gives~~
(2) Improvements

For the improvements, we can use check sums,

DECENT PAPER PRODUCT

Teacher's Signature:

Date:

(Qu)

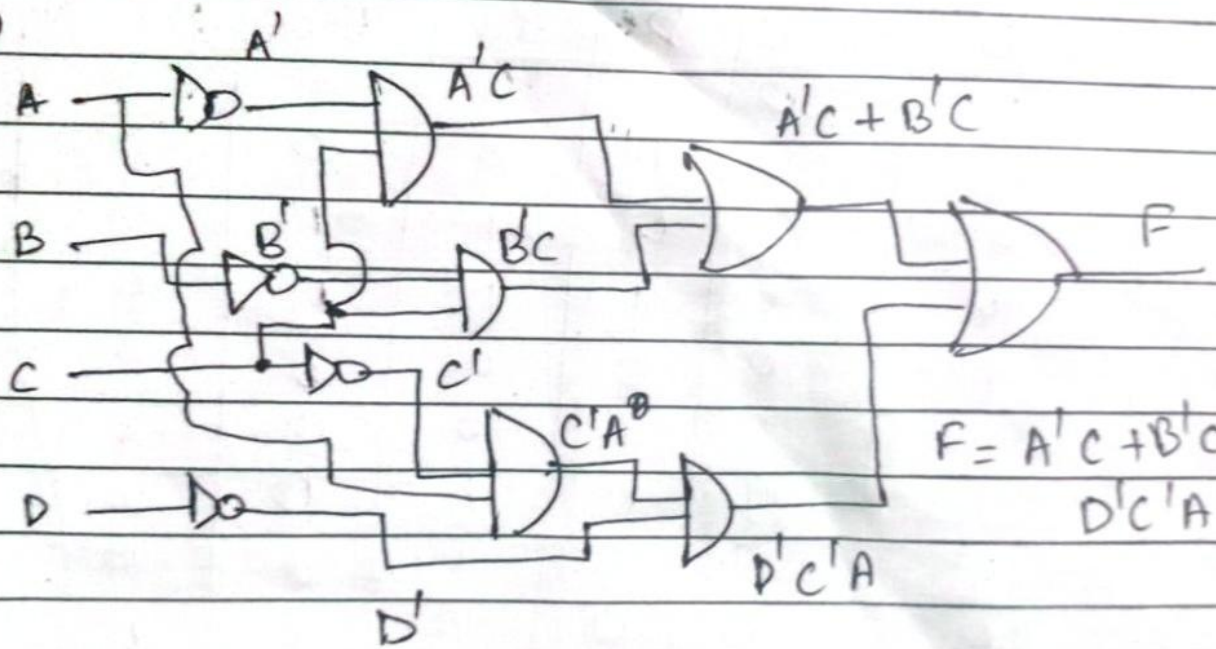

Truth Table

13 + 10 × 15.32 × 20.89

Date:

	A	B	C	D	A'C	B'C	D'C'A	F
0	0	0	0	0	0	0	0	0
1	0	0	0	1	0	0	0	0
2	0	0	1	0	1	1	0	1
3	0	0	1	1	1	1	0	1
4	0	1	0	0	0	0	0	0
5	0	1	0	1	0	0	0	0
6	0	1	1	0	1	0	0	1
7	0	1	1	1	1	0	0	1
8	1	0	0	0	0	0	1	1
9	1	0	0	1	0	0	0	0
10	1	0	1	0	0	1	0	1
11	1	0	1	1	0	1	0	1
12	1	1	0	0	0	0	1	1
13	1	1	0	1	0	0	0	0
14	1	1	1	0	0	0	0	0
15	1	1	1	1	0	0	0	0

DECENT PAPER PRODUCT

Teacher's Signature:

Date:

(Q4) part (c)

take A as the selection bit

AB \ CD	00	01	11	10
00	0	1	13	7
01	4	5	17	61
11	12	13	15	14
10	12	9	11	10

where A = 0 | G = C

where A = 1 | $G = C'D' + B'C$

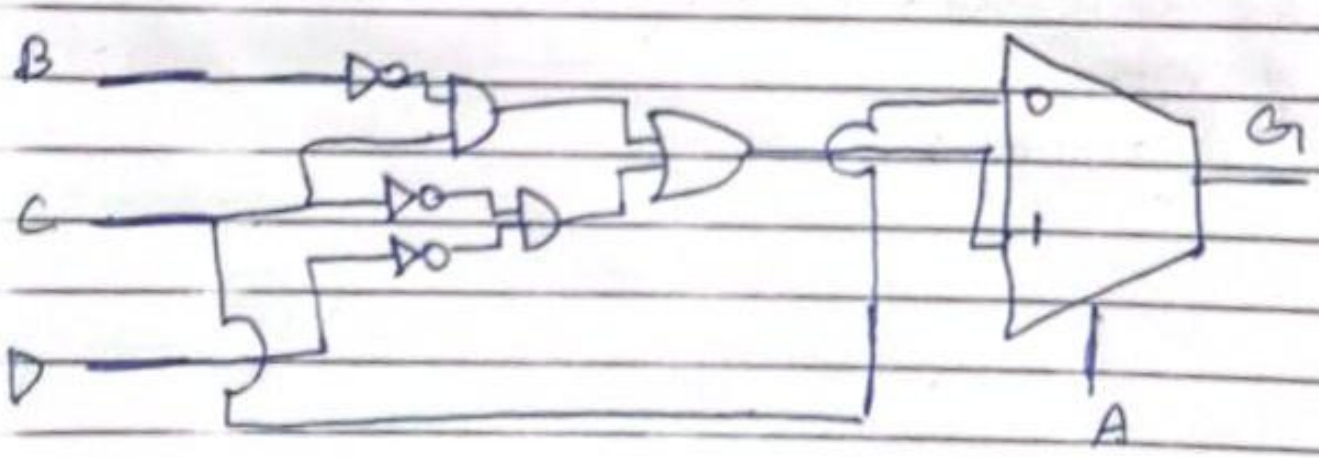

DECENT PAPER PRODUCT

Teacher's Signature:

Date:

D0)

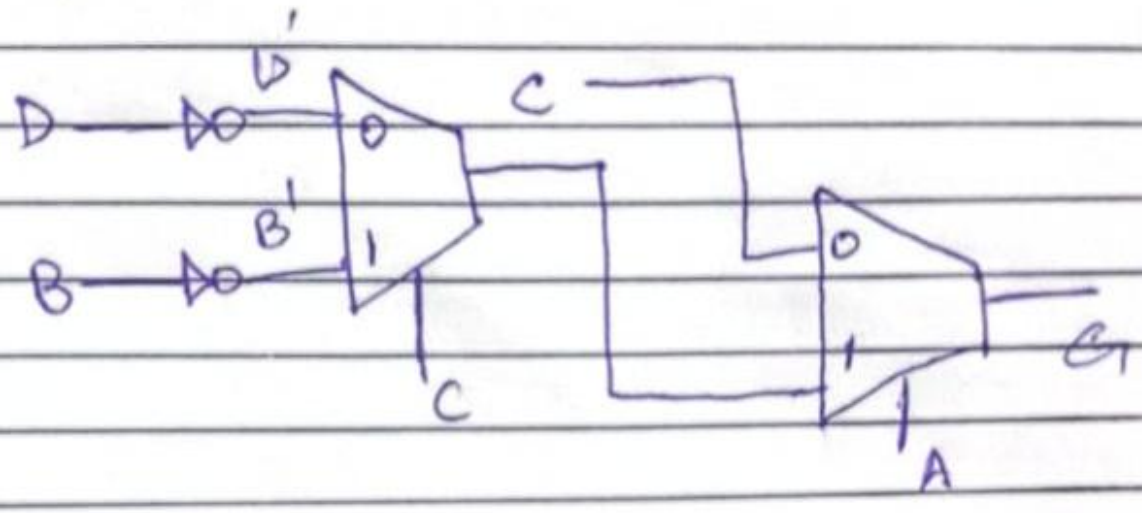

DECENT™ PAPER PRODUCT

0111, 0110, 1011 1010 1100

Date:

Q4

PART B

$F = A'C + B'C + A'D'C'$

$= A'C(B+B') + B'C(A+A') + AD'C'(B+B')$

$= A'CB + A'CB' + B'CA + B'CA' + AD'C'B + AB'C'D'$

$= A'CBD + A'CBD' + A'CB'D + A'CB'D' + B'CAD + B'CAD' + B'CA'D' + B'CA'D + ABC'D' + AB'C'D'$

$= A'BCD + A'BCD' + A'B'CD + A'B'CD' + AB'CD + ABCD + A'B'CD' + A'B'CD + ABC'D' + AB'C'D'$

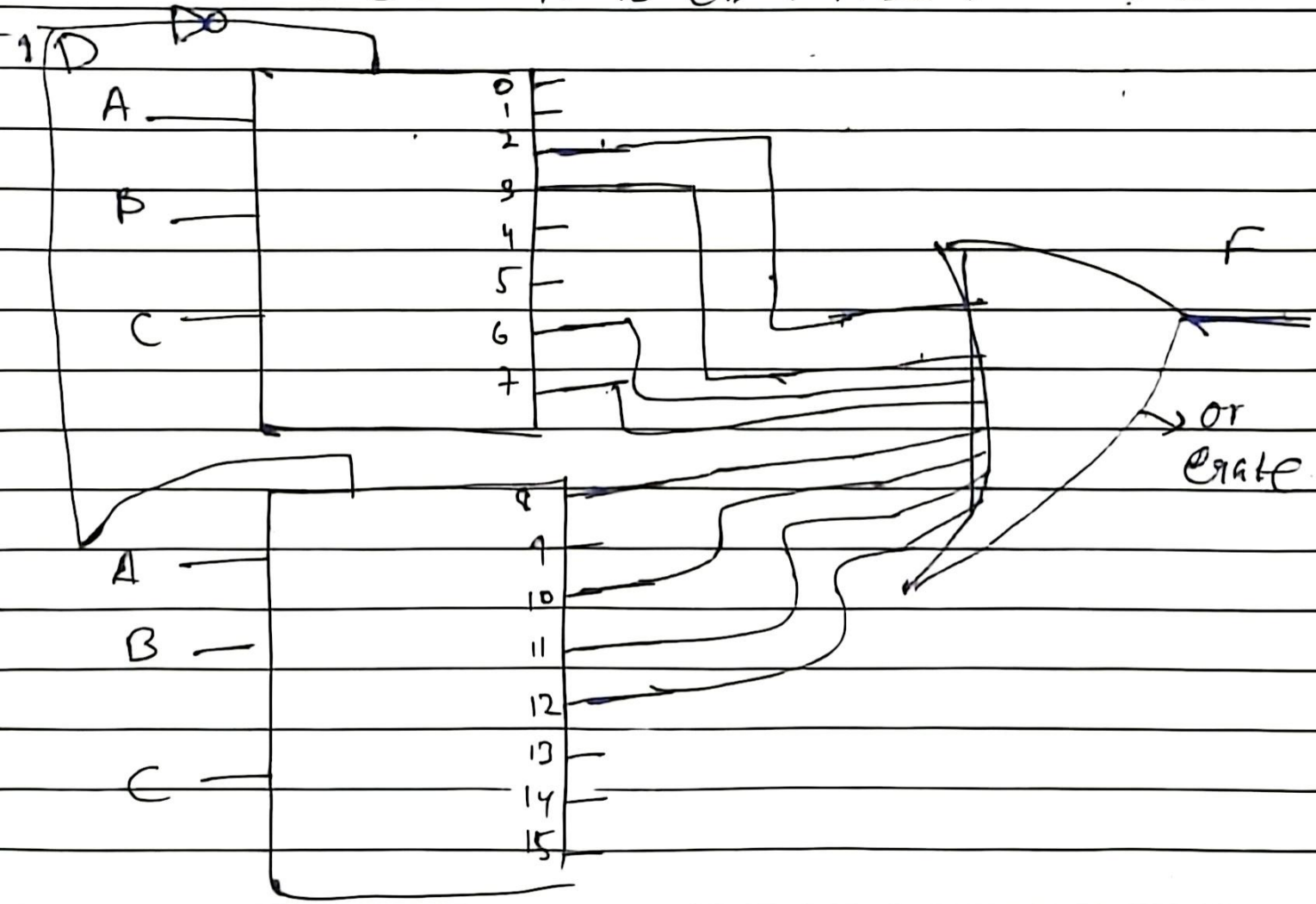

DECENT

Teacher's Signature: