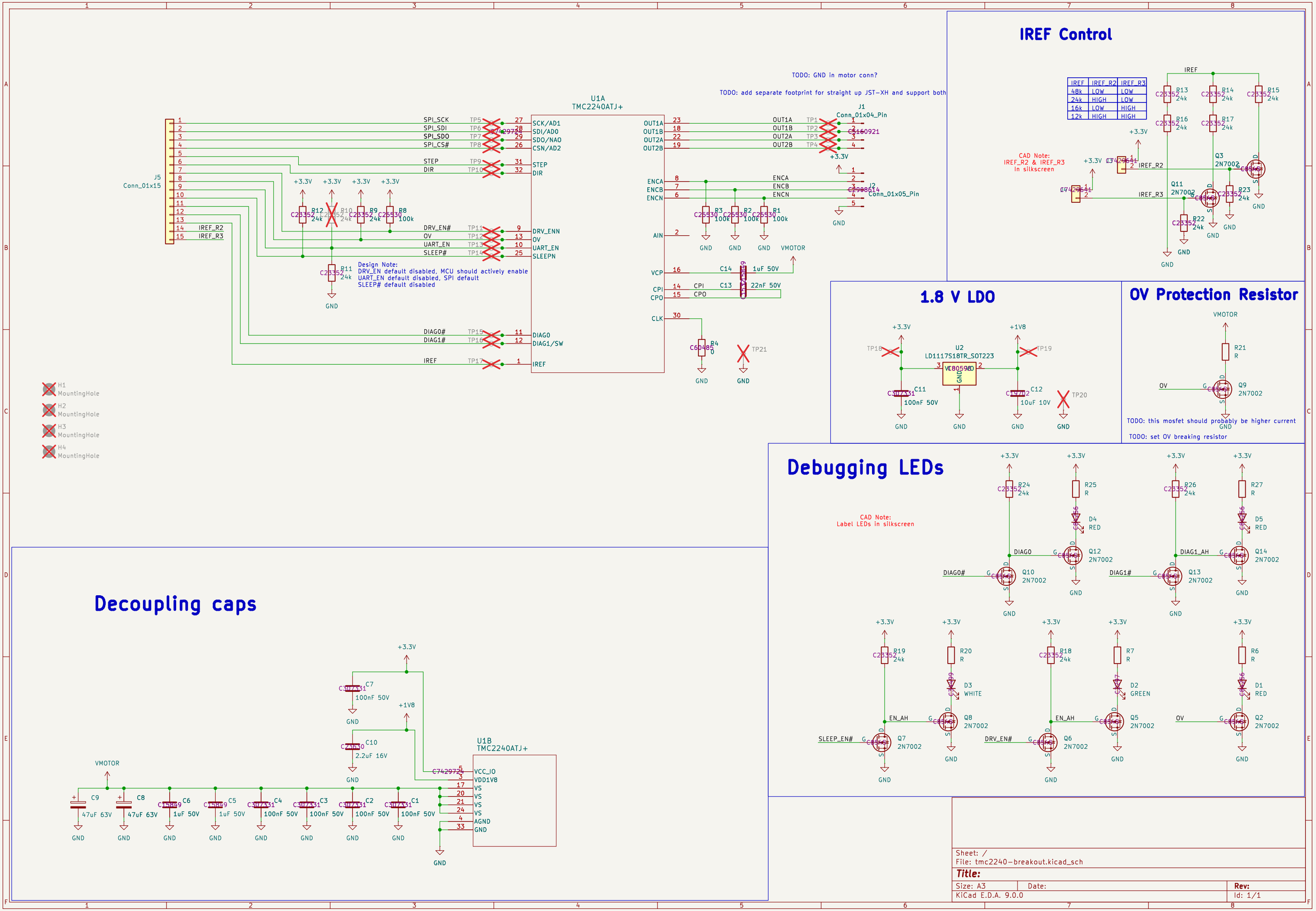
IREF Control
1.8 V LDO
OV Protection Resistor
Debugging LEDs
Decoupling caps
U1A
TMC2240ATJ+
U1B
TMC2240ATJ+
J5
Conn_01x15
J1
Conn_01x04_Pin
J2
Conn_01x05_Pin
U2
LD1117S18TR_SOT223
TODO: GND in motor conn?
TODO: add separate footprint for straight up JST-XH and support both
Design Note:
DRV_EN default disabled, MCU should actively enable
UART_EN default disabled, SPI default
SLEEP# default disabled
CAD Note:
IREF_R2 & IREF_R3
In silkscreen
CAD Note:
Label LEDs in silkscreen
TODO: this mosfet should probably be higher current
TODO: set OV breaking resistor
Sheet: /
File: tmc2240-breakout.kicad_sch
Title:
Size: A3
Date:
Rev:
KiCad E.D.A. 9.0.0
Id: 1/1