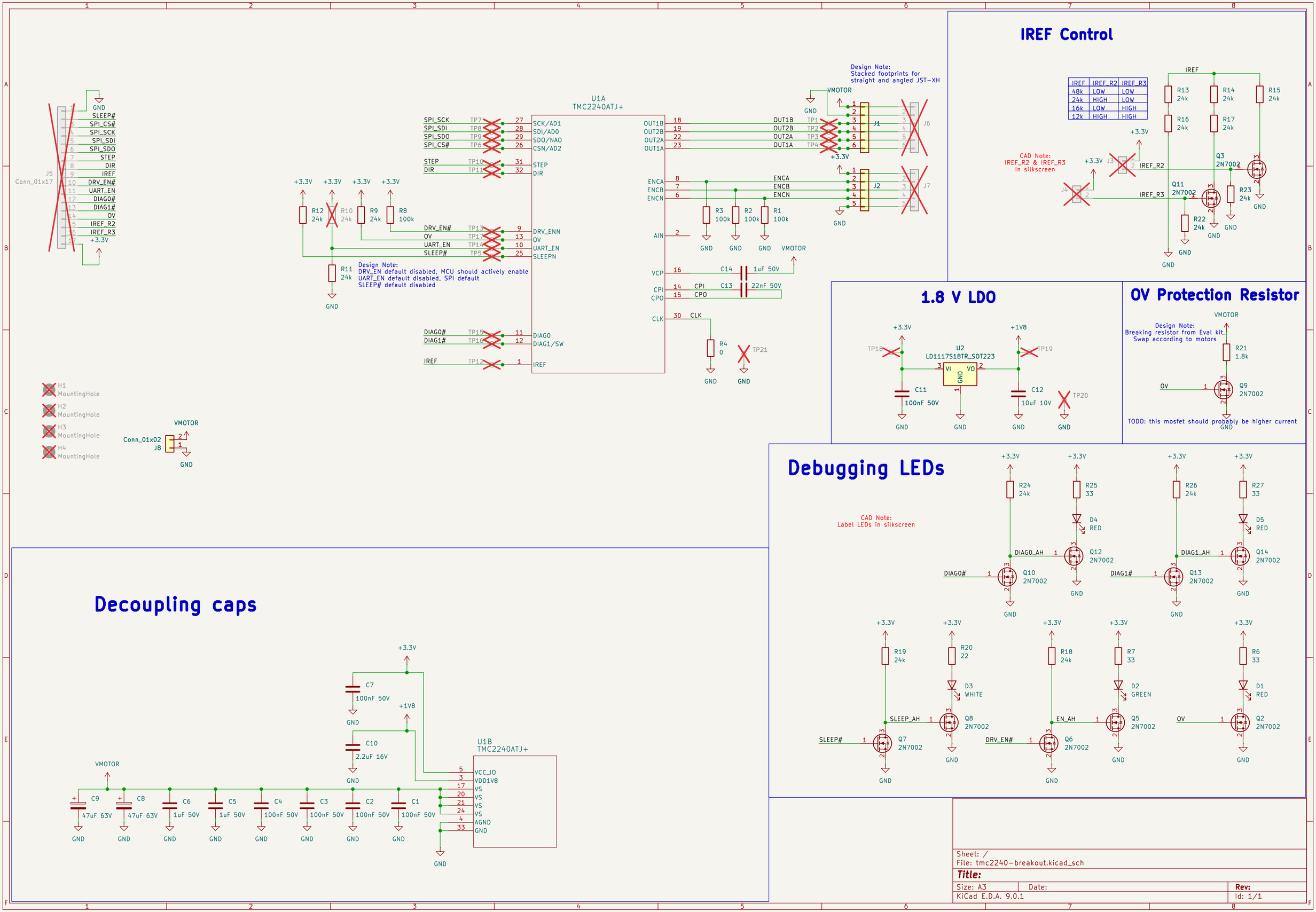
IREF Control
IREF | IREF_R2 | IREF_R3
48k | LOW | LOW
24k | HIGH | LOW
16k | LOW | HIGH
12k | HIGH | HIGH
CAD Note: IREF_R2 & IREF_R3 In silkscreen
1.8 V LDO
U2 LD1117S18TR_SOT223
OV Protection Resistor
Design Note: Breaking resistor from Eval kit, Swap according to motors
TODO: this mosfet should probably be higher current
Debugging LEDs
CAD Note: Label LEDs in silkscreen
Decoupling caps
U1A TMC2240ATJ+
U1B TMC2240ATJ+
Design Note: Stacked footprints for straight and angled JST-XH
Design Note: DRV_EN default disabled, MCU should actively enable UART_EN default disabled, SPI default SLEEP# default disabled
Sheet: /
File: tmc2240-breakout.kicad_sch
Title:
Size: A3
Date:
Rev:
KiCad E.D.A. 9.0.1
Id: 1/1