EK-SCU35-PP-G-05204

SCU35 EVAL BOARD

AECG-DCCG
2100 Logic Drive
San Jose, CA 95124

PAGE:	**01 TITLE BLOCK**
PAGE NUMBER:	**1** OF **33**
DOC NO:	**038-05204-01**
DATE: **Friday, March 28, 2025**	REV: **A4**
SKU: **BASE**	

CONFIDENTIAL AND PROPRIETARY TO ADVANCED MICRO DEVICES INC.

© 2024 Advanced Micro Devices

This AMD Board schematic and design is the exclusive property of AMD, and is provided only to entities under a non-disclosure agreement with AMD for evaluation purposes. Further distribution or disclosure is strictly prohibited. Use of this schematic and design for any purpose other than evaluation requires a Board Technology License Agreement with AMD. AMD makes no representations or warranties of any kind regarding this schematic and design, including, not limited to, any implied warranty of merchantability or fitness for a particular purpose, and disclaims responsibility for any consequences resulting from use of the information included herein.

TITLE: **EK-SCU35-PP-G**

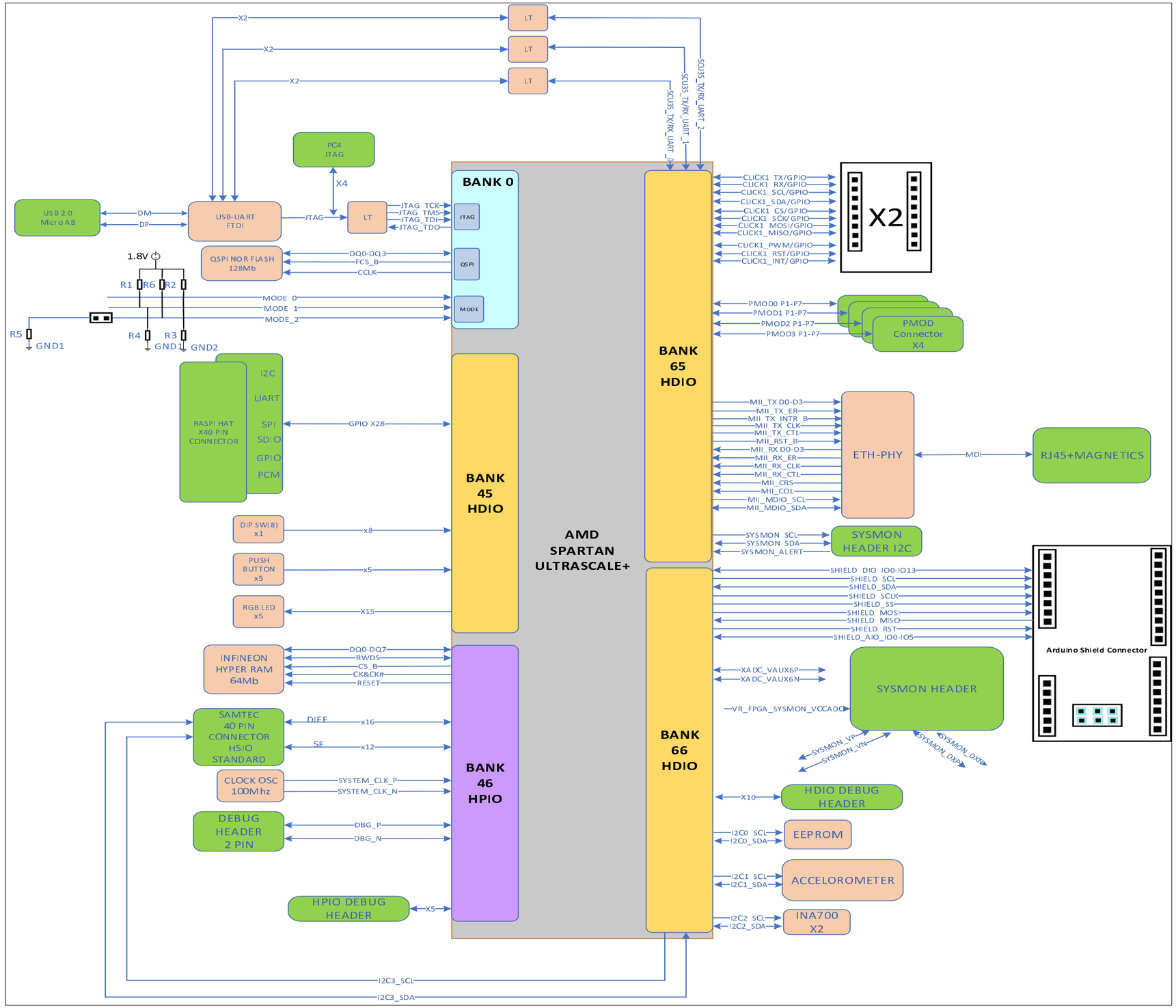

AMD

AECG-DCCG
2100 Logic Drive
San Jose, CA 95124

PAGE:	02 SYSTEM DIAGRAM
PAGE NUMBER:	2 OF 33
DOC NO:	038-05204-01
DATE: Friday, March 28, 2025	REV: A4
SKU: BASE	

CONFIDENTIAL AND PROPRIETARY TO ADVANCED MICRO DEVICES INC.
© 2024 Advanced Micro Devices
This AMD Board schematic and design is the exclusive property of AMD, and is provided only to entities under a non-disclosure agreement with AMD for evaluation purposes. Further distribution or disclosure is strictly prohibited. Use of this schematic and design for any purpose other than evaluation requires a Board Technology License Agreement with AMD. AMD makes no representations or warranties of any kind regarding this schematic and design, including, not limited to, any implied warranty of merchantability or fitness for a particular purpose, and disclaims responsibility for any consequences resulting from use of the information included herein.

TITLE: EK-SCU35-PP-G

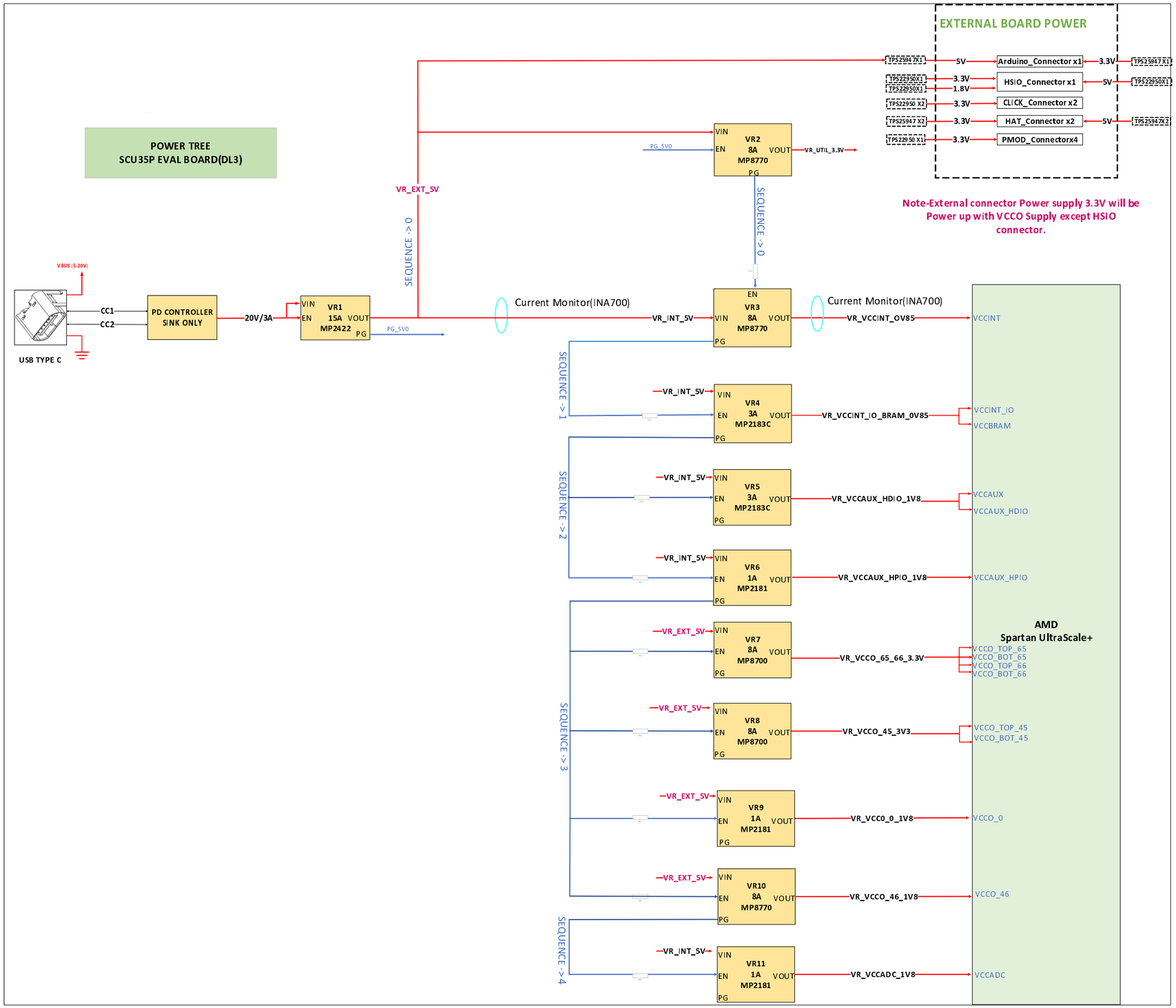

AMD

AECG-DCCG
2100 Logic Drive
San Jose, CA 95124

PAGE:	03_POWER TREE
PAGE NUMBER:	3 OF 33
DOC NO:	038-05204-01
DATE: Friday, March 28, 2025	REV: A4
SKU: BASE	

CONFIDENTIAL AND PROPRIETARY TO ADVANCED MICRO DEVICES INC.
© 2024 Advanced Micro Devices
This AMD Board schematic and design is the exclusive property of AMD, and is provided only to entities under a non-disclosure agreement with AMD for evaluation purposes. Further distribution or disclosure is strictly prohibited. Use of this schematic and design for any purpose other than evaluation requires a Board Technology License Agreement with AMD. AMD makes no representations or warranties of any kind regarding this schematic and design, including, not limited to, any implied warranty of merchantability or fitness for a particular purpose, and disclaims responsibility for any consequences resulting from use of the information included herein.

TITLE: EK-SCU35-PP-G

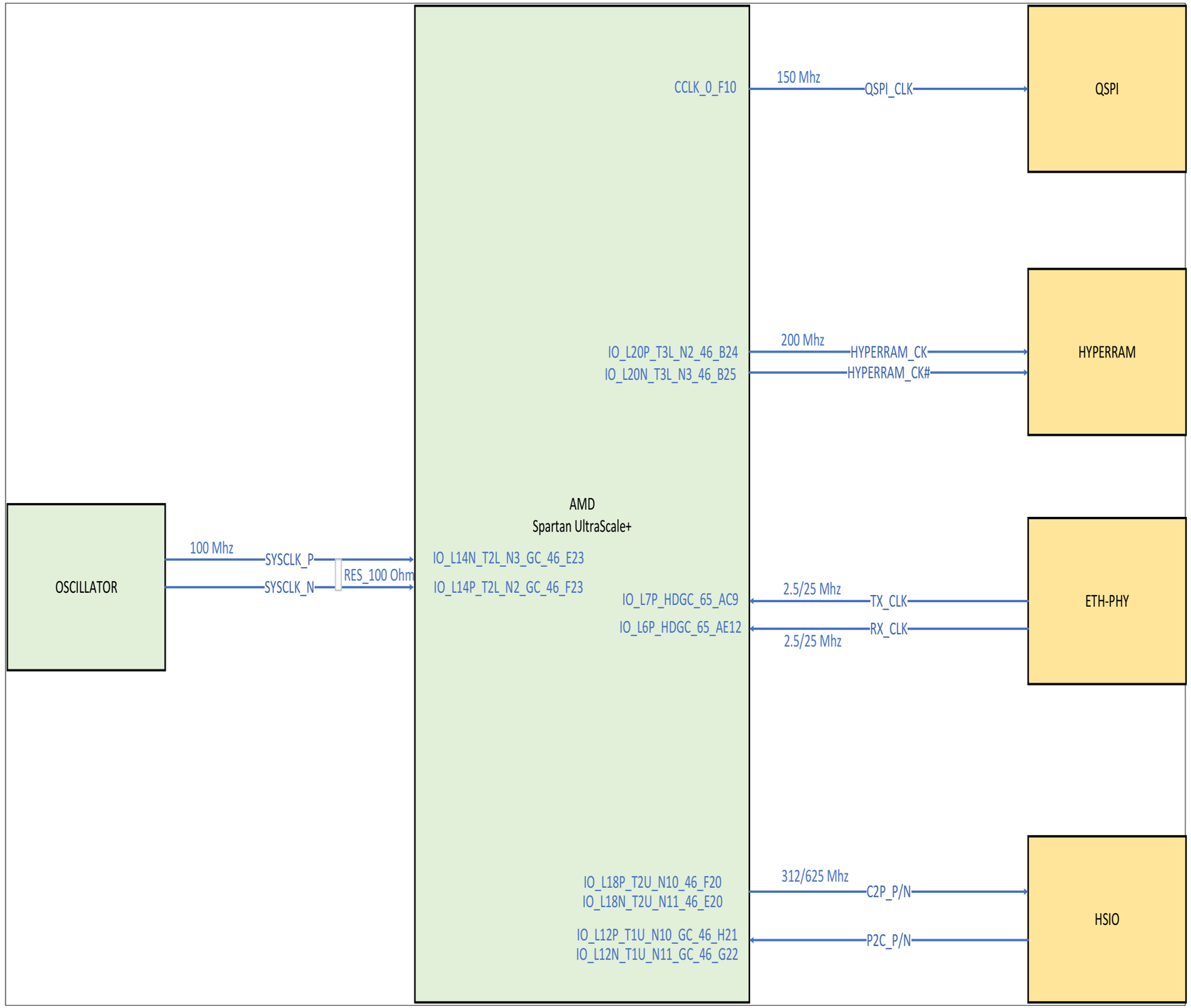

AECG-DCCG
2100 Logic Drive
San Jose, CA 95124

PAGE:	04_CLOCK TREE
PAGE NUMBER:	4 OF 33
DOC NO:	038-05204-01
DATE: Friday, March 28, 2025	REV: A4
SKU: BASE	

CONFIDENTIAL AND PROPRIETARY TO ADVANCED MICRO DEVICES INC.
© 2024 Advanced Micro Devices
This AMD Board schematic and design is the exclusive property of AMD, and is provided only to entities under a non-disclosure agreement with AMD for evaluation purposes. Further distribution or disclosure is strictly prohibited. Use of this schematic and design for any purpose other than evaluation requires a Board Technology License Agreement with AMD. AMD makes no representations or warranties of any kind regarding this schematic and design, including, not limited to, any implied warranty of merchantability or fitness for a particular purpose, and disclaims responsibility for any consequences resulting from use of the information included herein.

TITLE: EK-SCU35-PP-G

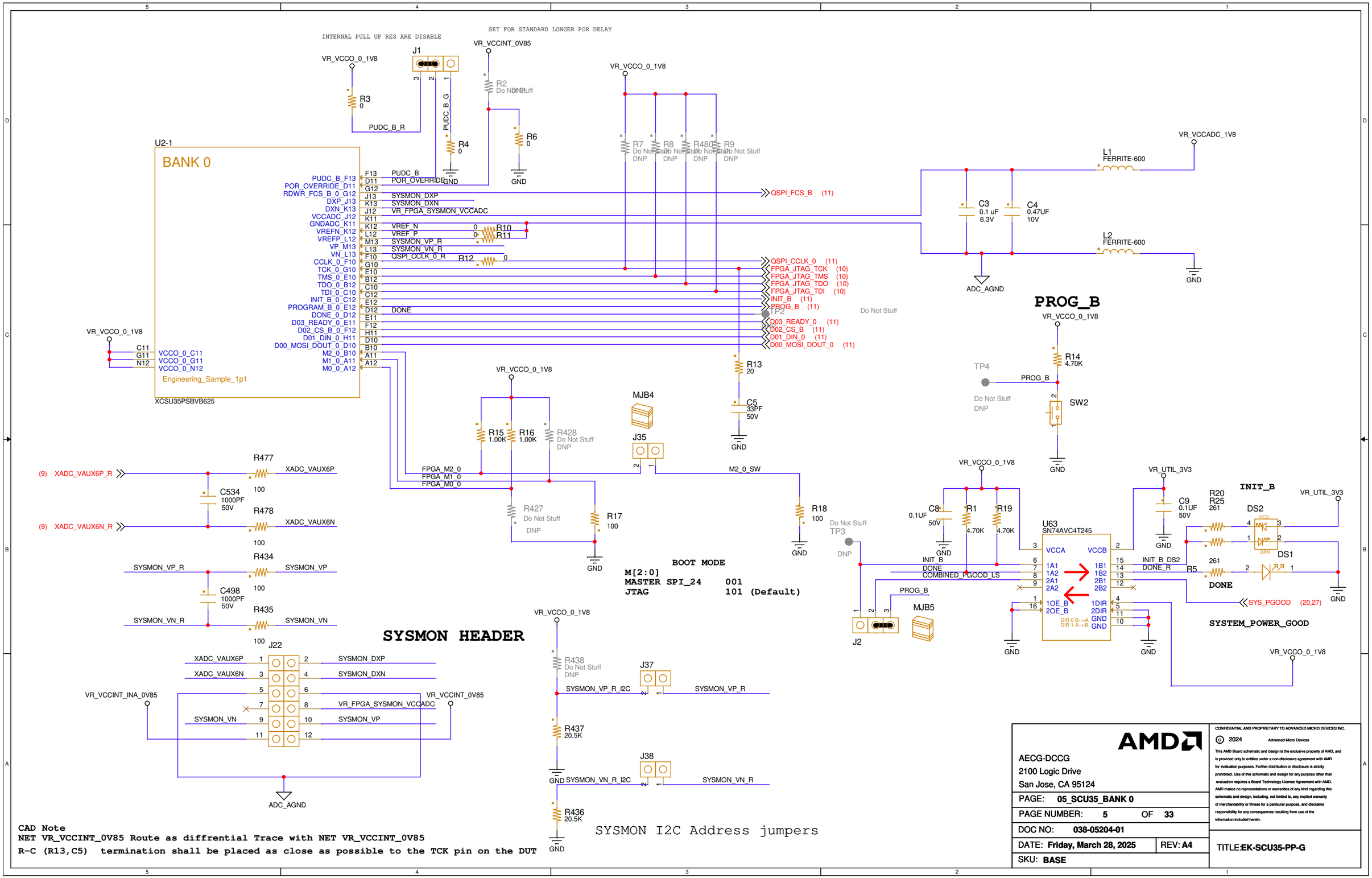
INTERNAL PULL UP RES ARE DISABLE
SET FOR STANDARD LONGER POR DELAY
U2-1
BANK 0
Engineering_Sample_1p1
XCSU35PSBVB625
PUDC_B_F13
POR_OVERRIDE_D11
RDWR_FCS_B_0_G12
DXP_J13
DXN_K13
VCCADC_J12
GNDADC_K11
VREFN_K12
VREFP_L12
VP_M13
VN_L13
CCLK_0_F10
TCK_0_G10
TMS_0_E10
TDO_0_B12
TDI_0_C10
INIT_B_0_C12
PROGRAM_B_0_E12
DONE_0_D12
D03_READY_0_E11
D02_CS_B_0_F12
D01_DIN_0_H11
D00_MOSI_DOUT_0_D10
M2_0_B10
M1_0_A11
M0_0_A12
VCCO_0_C11
VCCO_0_G11
VCCO_0_N12
PUDC_B
POR_OVERRIDE
SYSMON_DXP
SYSMON_DXN
VR_FPGA_SYSMON_VCCADC
VREF_N
VREF_P
SYSMON_VP_R
SYSMON_VN_R
QSPI_CCLK_0_R
DONE
QSPI_FCS_B (11)
QSPI_CCLK_0 (11)
FPGA_JTAG_TCK (10)
FPGA_JTAG_TMS (10)
FPGA_JTAG_TDO (10)
FPGA_JTAG_TDI (10)
INIT_B (11)
PROG_B (11)
D03_READY_0 (11)
D02_CS_B (11)
D01_DIN_0 (11)
D00_MOSI_DOUT_0 (11)
VR_VCCO_0_1V8
VR_VCCINT_0V85
VR_VCCADC_1V8
J1
R3 0
R2 Do Not Stuff DNP
R4 0
R6 0
R7 Do Not Stuff DNP
R8 Do Not Stuff DNP
R480 Do Not Stuff DNP
R9 Do Not Stuff DNP
R10 0
R11 0
R12 0
R13 20
C5 33PF 50V
L1 FERRITE-600
L2 FERRITE-600
C3 0.1 uF 6.3V
C4 0.47UF 10V
ADC_AGND
GND
PUDC_B_R
PUDC_B_G
PROG_B
R14 4.70K
TP4
Do Not Stuff DNP
SW2
TP2
Do Not Stuff
R15 1.00K
R16 1.00K
R428 Do Not Stuff DNP
R427 Do Not Stuff DNP
R17 100
R18 100
MJB4
J35
FPGA_M2_0
FPGA_M1_0
FPGA_M0_0
M2_0_SW
BOOT MODE
M[2:0]
MASTER SPI_24 001
JTAG 101 (Default)
R477 100
R478 100
C534 1000PF 50V
XADC_VAUX6P
XADC_VAUX6N
(9) XADC_VAUX6P_R
(9) XADC_VAUX6N_R
R434 100
R435 100
C498 1000PF 50V
SYSMON_VP_R
SYSMON_VN_R
SYSMON_VP
SYSMON_VN
SYSMON HEADER
J22
VR_VCCINT_INA_0V85
VR_VCCINT_0V85
VR_FPGA_SYSMON_VCCADC
R438 Do Not Stuff DNP
R437 20.5K
R436 20.5K
J37
J38
SYSMON_VP_R_I2C
SYSMON_VN_R_I2C
SYSMON_VN_R
SYSMON I2C Address jumpers
C8 0.1UF 50V
R1 4.70K
R19 4.70K
U63
SN74AVC4T245
VCCA
VCCB
1A1
1A2
2A1
2A2
1B1
1B2
2B1
2B2
1OE_B
2OE_B
1DIR
2DIR
DIR 0 B-->A
DIR 1 A-->B
INIT_B
DONE
COMBINED_PGOOD_LS
PROG_B
TP3
DNP
MJB5
J2
VR_UTIL_3V3
C9 0.1UF 50V
R20 261
R25 261
R5 261
INIT_B
DS2
DS1
RED
GRN
INIT_B_DS2
DONE_R
DONE
SYS_PGOOD (20,27)
SYSTEM_POWER_GOOD
CAD Note
NET VR_VCCINT_0V85 Route as diffrential Trace with NET VR_VCCINT_0V85
R-C (R13,C5) termination shall be placed as close as possible to the TCK pin on the DUT
AMD
AECG-DCCG
2100 Logic Drive
San Jose, CA 95124
PAGE: 05_SCU35_BANK 0
PAGE NUMBER: 5 OF 33
DOC NO: 038-05204-01
DATE: Friday, March 28, 2025
REV: A4
SKU: BASE
CONFIDENTIAL AND PROPRIETARY TO ADVANCED MICRO DEVICES INC.
© 2024 Advanced Micro Devices
This AMD Board schematic and design is the exclusive property of AMD, and is provided only to entities under a non-disclosure agreement with AMD for evaluation purposes. Further distribution or disclosure is strictly prohibited. Use of this schematic and design for any purpose other than evaluation requires a Board Technology License Agreement with AMD. AMD makes no representations or warranties of any kind regarding this schematic and design, including, not limited to, any implied warranty of merchantability or fitness for a particular purpose, and disclaims responsibility for any consequences resulting from use of the information included herein.
TITLE: EK-SCU35-PP-G

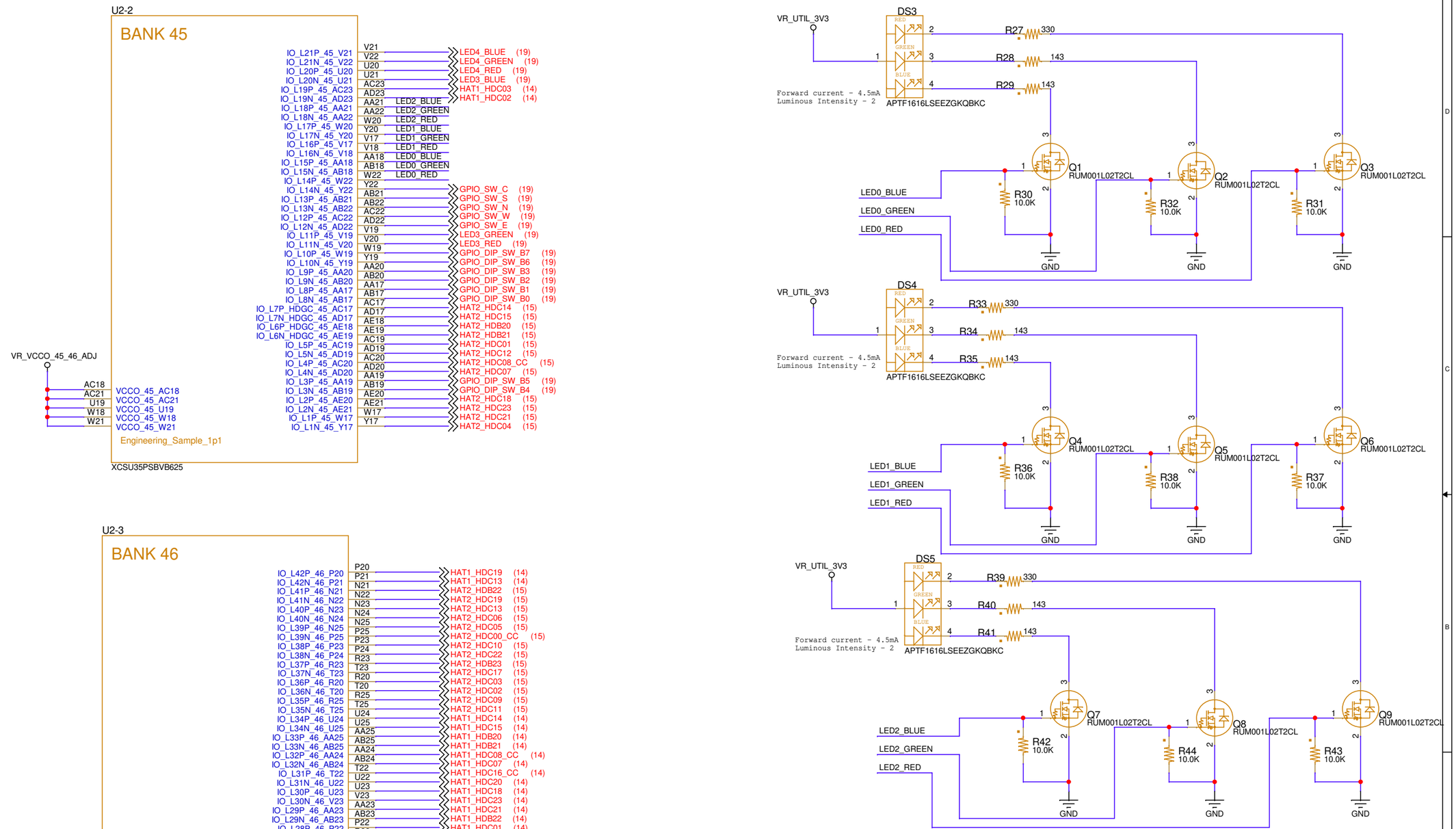

AMD

AECG-DCCG
2100 Logic Drive
San Jose, CA 95124

PAGE: 06_SCU35_BANK 45 & 46	
PAGE NUMBER: 6 OF 33	
DOC NO: 038-05204-01	
DATE: Friday, March 28, 2025	REV: A4
SKU: BASE	

CONFIDENTIAL AND PROPRIETARY TO ADVANCED MICRO DEVICES INC.
© 2024 Advanced Micro Devices
This AMD Board schematic and design is the exclusive property of AMD, and is provided only to entities under a non-disclosure agreement with AMD for evaluation purposes. Further distribution or disclosure is strictly prohibited. Use of this schematic and design for any purpose other than evaluation requires a Board Technology License Agreement with AMD. AMD makes no representations or warranties of any kind regarding this schematic and design, including, not limited to, any implied warranty of merchantability or fitness for a particular purpose, and disclaims responsibility for any consequences resulting from use of the information included herein.

TITLE: EK-SCU35-PP-G

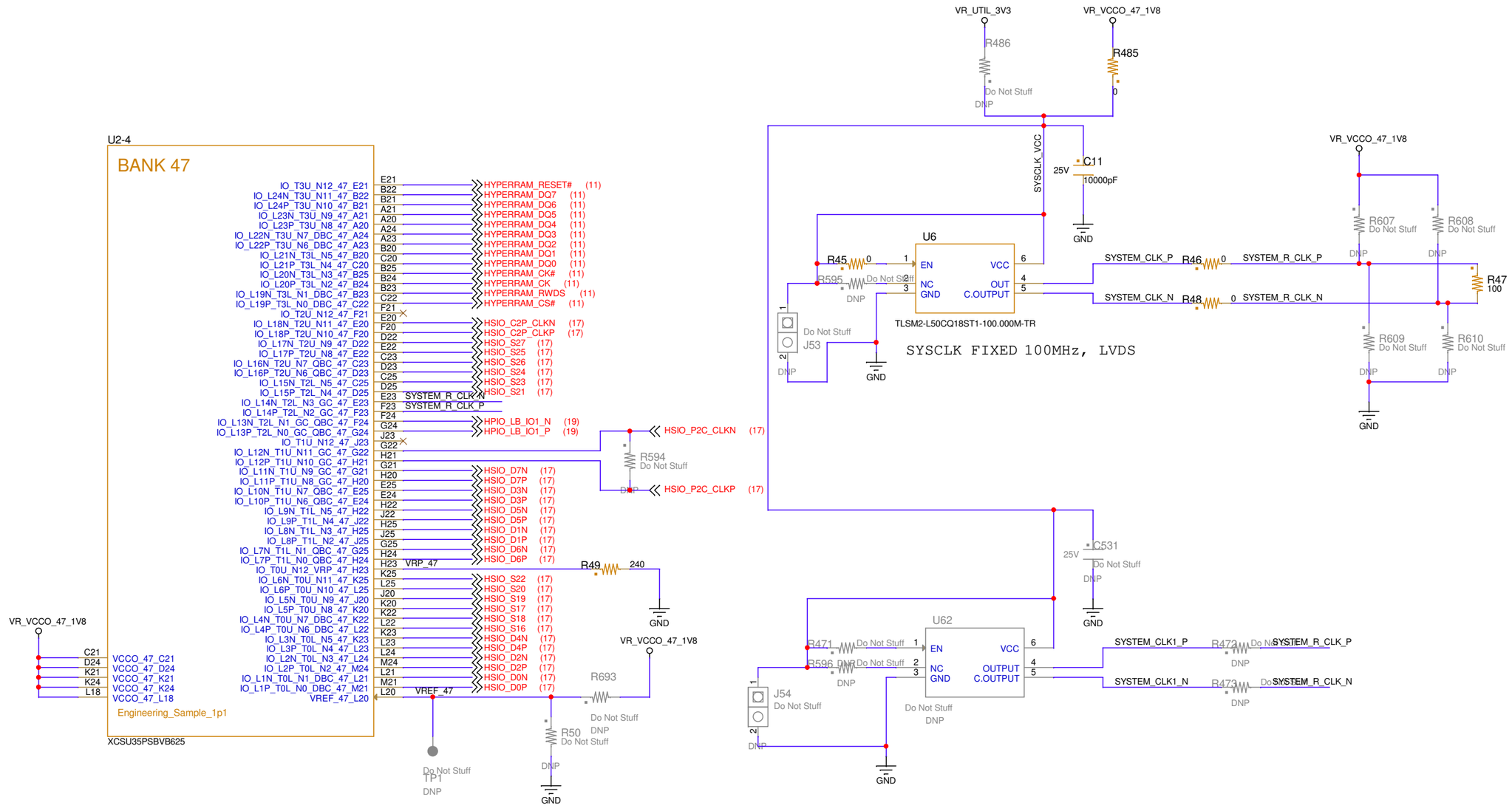

CAD NOTE: PAD SHARE
R472-R46 , R473-R48
Place C11 coupling capcitors near to OSC (U6)
Place C531 coupling capcitors near to OSC (U62)
R594 Keep the Termination After the FPGA BGA Ball

AMD

AECG-DCCG
2100 Logic Drive
San Jose, CA 95124

PAGE:	07_SCU35_BANK 47
PAGE NUMBER:	7 OF 33
DOC NO:	038-05204-01
DATE: Friday, March 28, 2025	REV: A4
SKU: BASE	

CONFIDENTIAL AND PROPRIETARY TO ADVANCED MICRO DEVICES INC.
© 2024 Advanced Micro Devices
This AMD Board schematic and design is the exclusive property of AMD, and is provided only to entities under a non-disclosure agreement with AMD for evaluation purposes. Further distribution or disclosure is strictly prohibited. Use of this schematic and design for any purpose other than evaluation requires a Board Technology License Agreement with AMD. AMD makes no representations or warranties of any kind regarding this schematic and design, including, not limited to, any implied warranty of merchantability or fitness for a particular purpose, and disclaims responsibility for any consequences resulting from use of the information included herein.

TITLE: EK-SCU35-PP-G

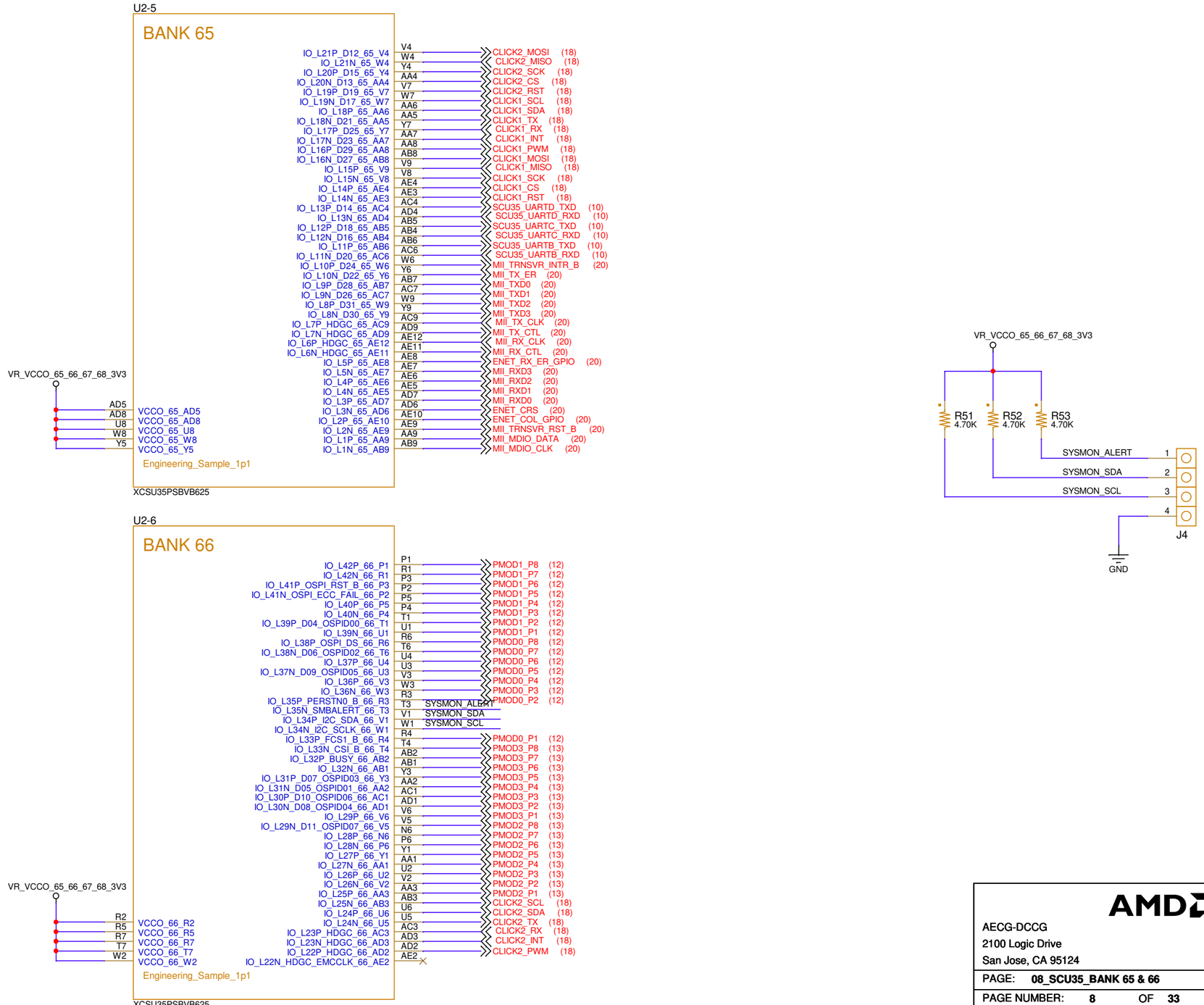

AECG-DCCG
2100 Logic Drive
San Jose, CA 95124

PAGE:	08_SCU35_BANK 65 & 66
PAGE NUMBER:	8 OF 33
DOC NO:	038-05204-01
DATE: Friday, March 28, 2025	REV: A4
SKU: BASE	

CONFIDENTIAL AND PROPRIETARY TO ADVANCED MICRO DEVICES INC.
© 2024 Advanced Micro Devices
This AMD Board schematic and design is the exclusive property of AMD, and is provided only to entities under a non-disclosure agreement with AMD for evaluation purposes. Further distribution or disclosure is strictly prohibited. Use of this schematic and design for any purpose other than evaluation requires a Board Technology License Agreement with AMD. AMD makes no representations or warranties of any kind regarding this schematic and design, including, not limited to, any implied warranty of merchantability or fitness for a particular purpose, and disclaims responsibility for any consequences resulting from use of the information included herein.

TITLE: EK-SCU35-PP-G

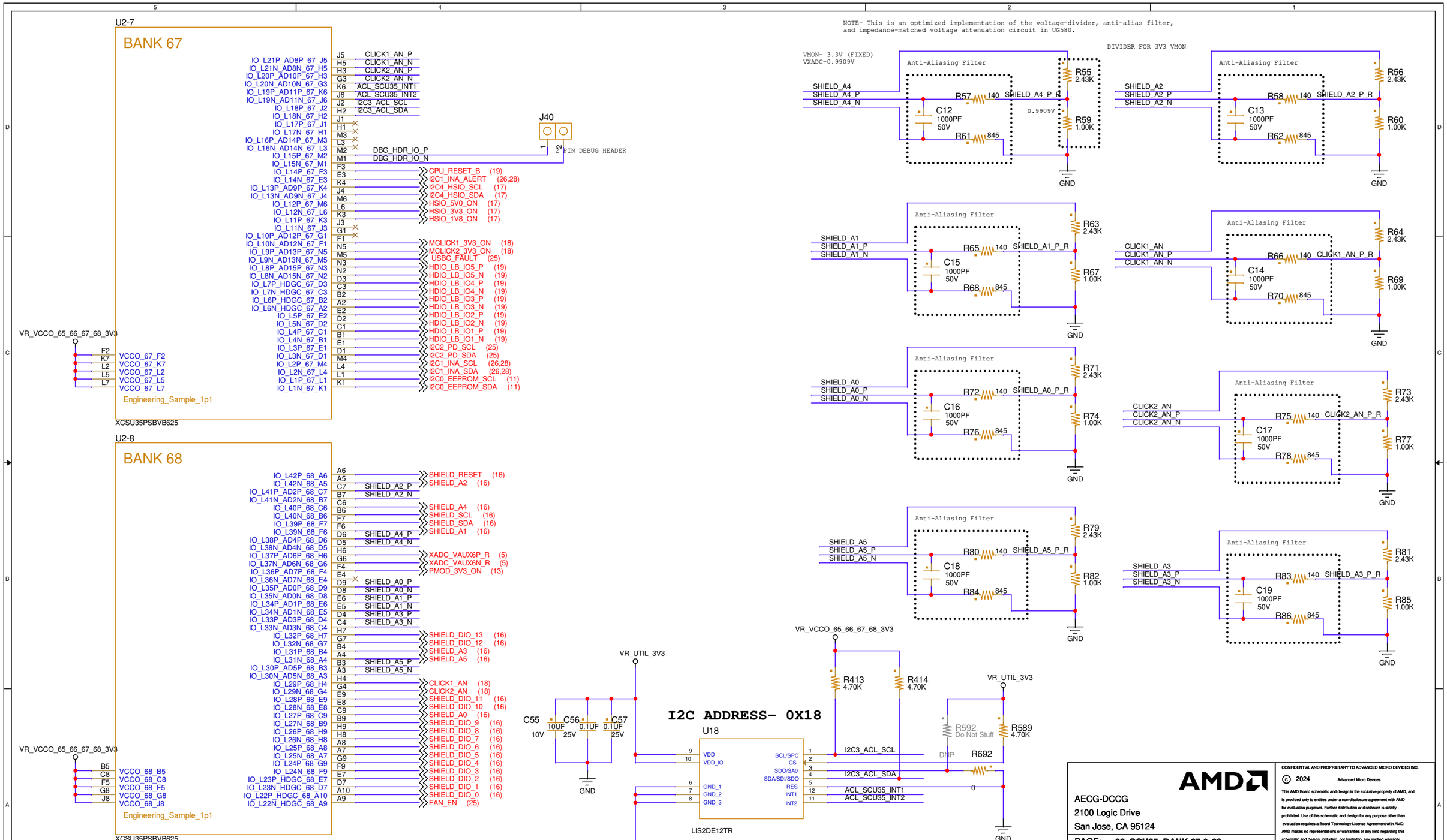

CAD Note

Place anti-alias filters for analog inputs close to the FPGA.
Place 560pF/1nF decoupling for VREFP and VCCADC close to the FPGA PIN
Analog-input traces (SHIELD_A*_P/N) on the PCB should also be routed as tightly coupled differential pairs.

AMD

AECG-DCCG
2100 Logic Drive
San Jose, CA 95124

PAGE:	09_SCU35_BANK 67 & 68	
PAGE NUMBER:	9 OF 33	
DOC NO:	038-05204-01	
DATE: Friday, March 28, 2025		REV: A4
SKU: BASE		

CONFIDENTIAL AND PROPRIETARY TO ADVANCED MICRO DEVICES INC.
© 2024 Advanced Micro Devices
This AMD Board schematic and design is the exclusive property of AMD, and is provided only to entities under a non-disclosure agreement with AMD for evaluation purposes. Further distribution or disclosure is strictly prohibited. Use of this schematic and design for any purpose other than evaluation requires a Board Technology License Agreement with AMD. AMD makes no representations or warranties of any kind regarding this schematic and design, including, not limited to, any implied warranty of merchantability or fitness for a particular purpose, and disclaims responsibility for any consequences resulting from use of the information included herein.

TITLE: EK-SCU35-PP-G

FTDI JTAG/UART

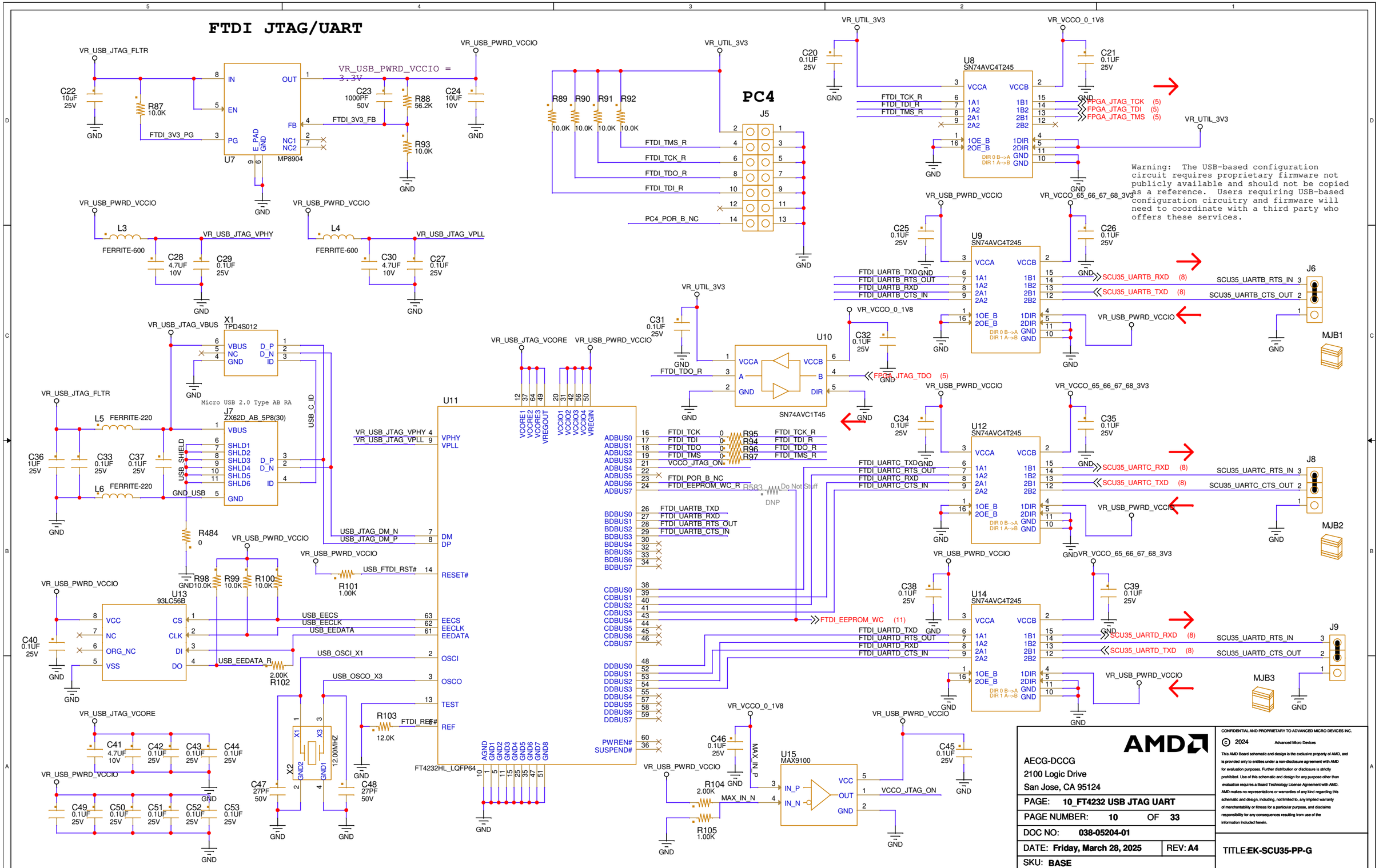

AMD

AECG-DCCG
2100 Logic Drive
San Jose, CA 95124

PAGE:	10_FT4232 USB JTAG UART
PAGE NUMBER:	10 OF 33
DOC NO:	038-05204-01
DATE: Friday, March 28, 2025	REV: A4
SKU: BASE	

CONFIDENTIAL AND PROPRIETARY TO ADVANCED MICRO DEVICES INC.

© 2024 Advanced Micro Devices

This AMD Board schematic and design is the exclusive property of AMD, and is provided only to entities under a non-disclosure agreement with AMD for evaluation purposes. Further distribution or disclosure is strictly prohibited. Use of this schematic and design for any purpose other than evaluation requires a Board Technology License Agreement with AMD. AMD makes no representations or warranties of any kind regarding this schematic and design, including, not limited to, any implied warranty of merchantability or fitness for a particular purpose, and disclaims responsibility for any consequences resulting from use of the information included herein.

TITLE: EK-SCU35-PP-G

HYPERRAM

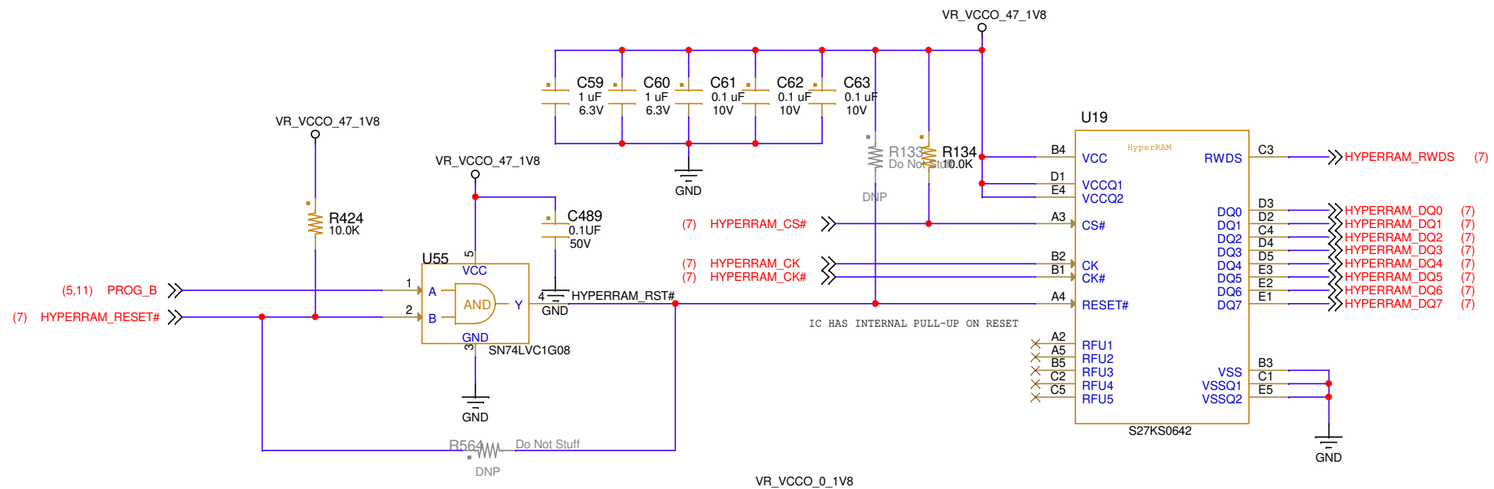

QSPI

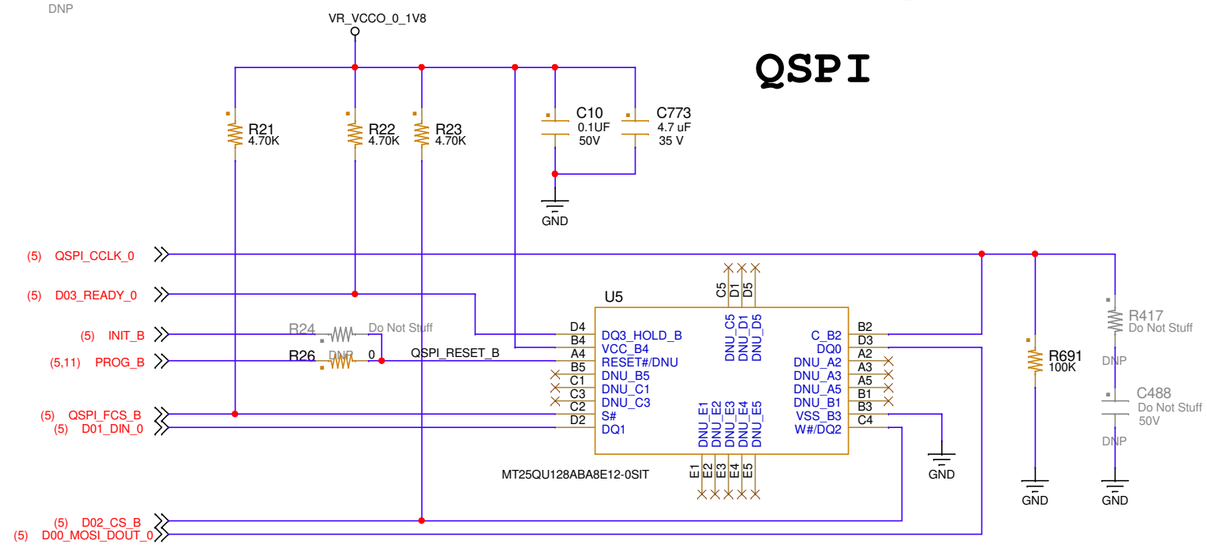

EEPROM

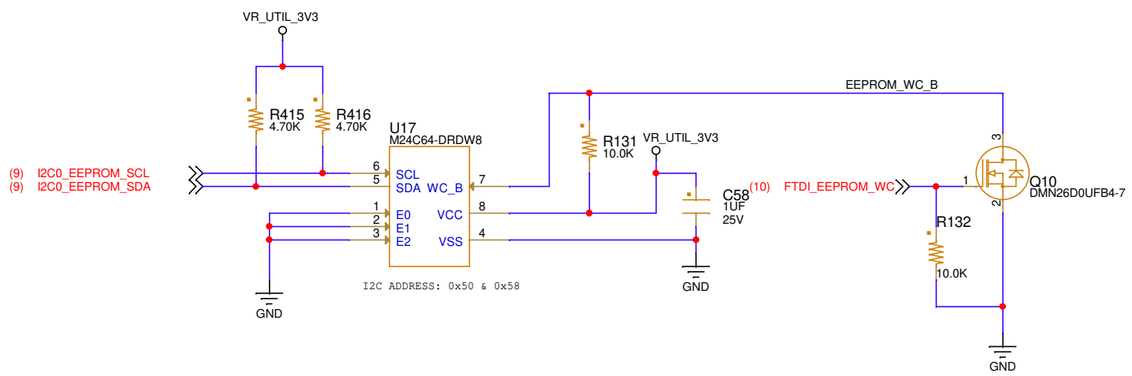

AECG-DCCG
2100 Logic Drive
San Jose, CA 95124

PAGE:	11_QSPI_HYPERRAM_EEPROM
PAGE NUMBER:	11 OF 33
DOC NO:	038-05204-01
DATE: Friday, March 28, 2025	REV: A4
SKU: BASE	

CONFIDENTIAL AND PROPRIETARY TO ADVANCED MICRO DEVICES INC.
© 2024 Advanced Micro Devices
This AMD Board schematic and design is the exclusive property of AMD, and is provided only to entities under a non-disclosure agreement with AMD for evaluation purposes. Further distribution or disclosure is strictly prohibited. Use of this schematic and design for any purpose other than evaluation requires a Board Technology License Agreement with AMD. AMD makes no representations or warranties of any kind regarding this schematic and design, including, not limited to, any implied warranty of merchantability or fitness for a particular purpose, and disclaims responsibility for any consequences resulting from use of the information included herein.

TITLE: EK-SCU35-PP-G

PMOD0

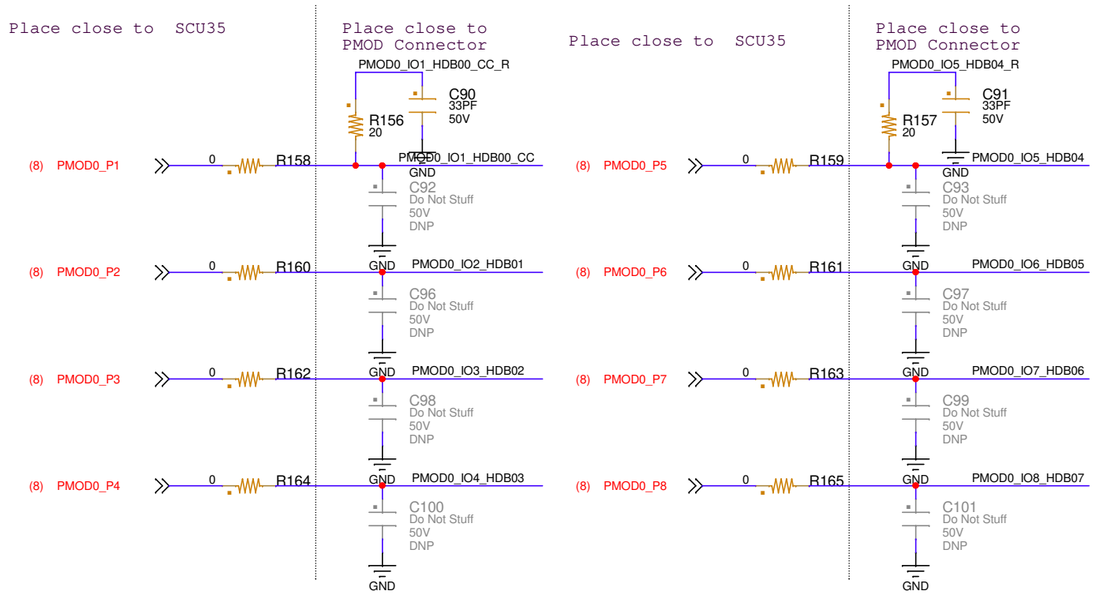

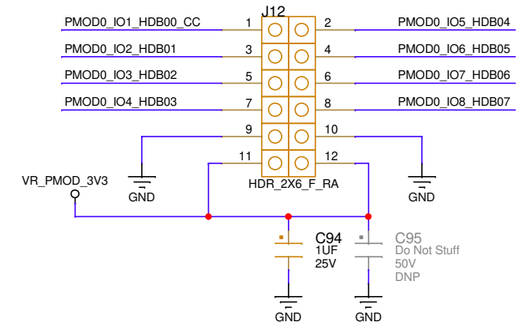

PMOD1

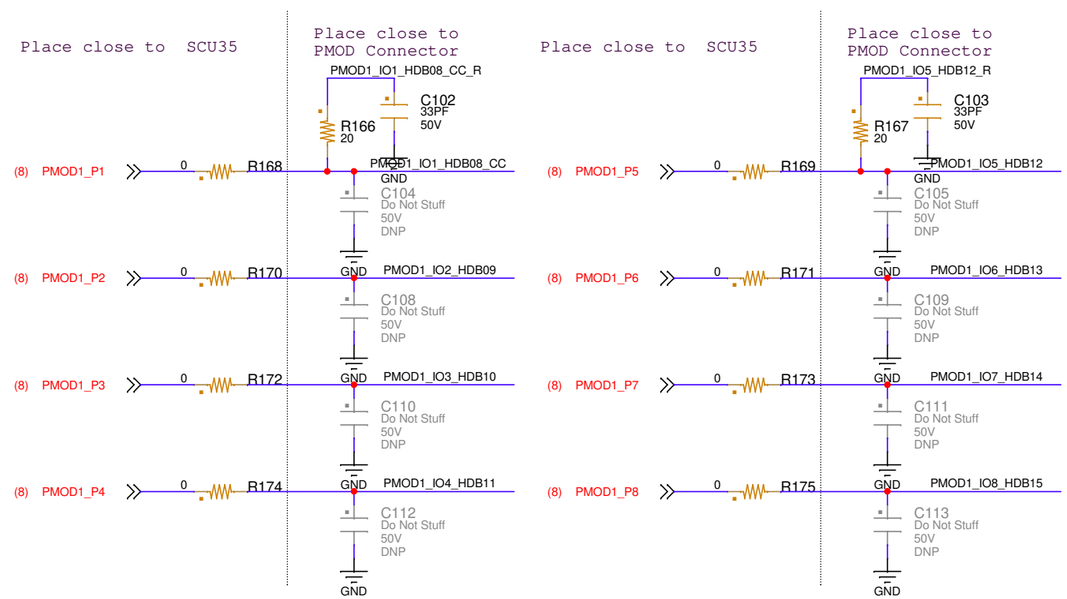

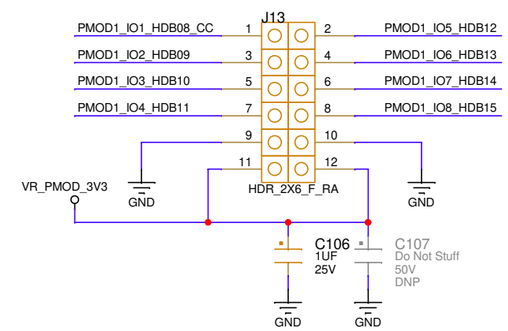

SCU35 is not compatible with PMODs that output 5V signals.

AMD

AECG-DCCG
2100 Logic Drive
San Jose, CA 95124

PAGE: 12_PMOD 0&1	
PAGE NUMBER: 12 OF 33	
DOC NO: 038-05204-01	
DATE: Friday, March 28, 2025	REV: A4
SKU: BASE	

CONFIDENTIAL AND PROPRIETARY TO ADVANCED MICRO DEVICES INC.
© 2024 Advanced Micro Devices
This AMD Board schematic and design is the exclusive property of AMD, and is provided only to entities under a non-disclosure agreement with AMD for evaluation purposes. Further distribution or disclosure is strictly prohibited. Use of this schematic and design for any purpose other than evaluation requires a Board Technology License Agreement with AMD. AMD makes no representations or warranties of any kind regarding this schematic and design, including, not limited to, any implied warranty of merchantability or fitness for a particular purpose, and disclaims responsibility for any consequences resulting from use of the information included herein.

TITLE: EK-SCU35-PP-G

PMOD2

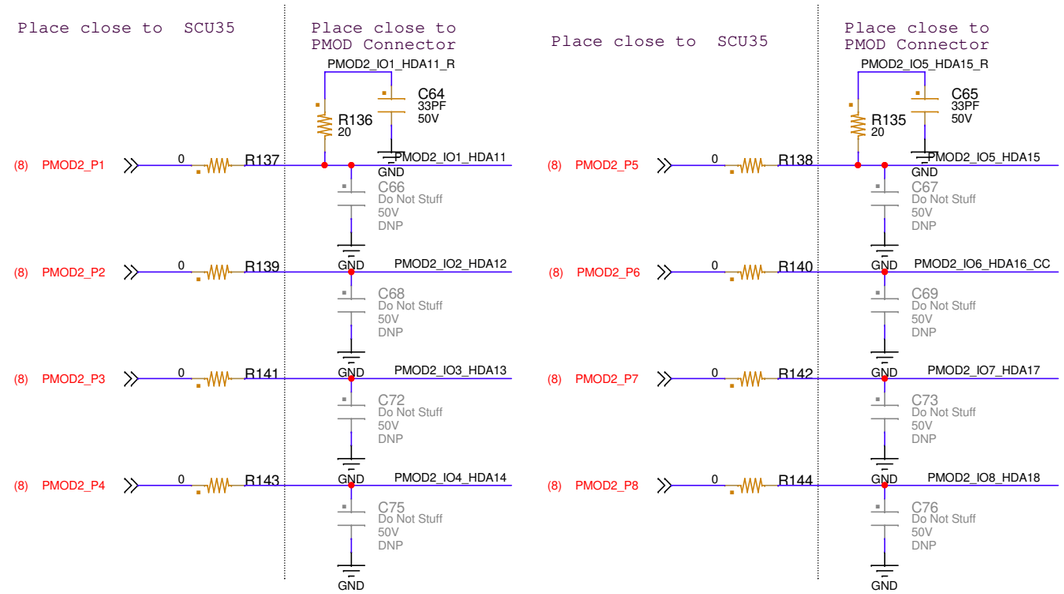

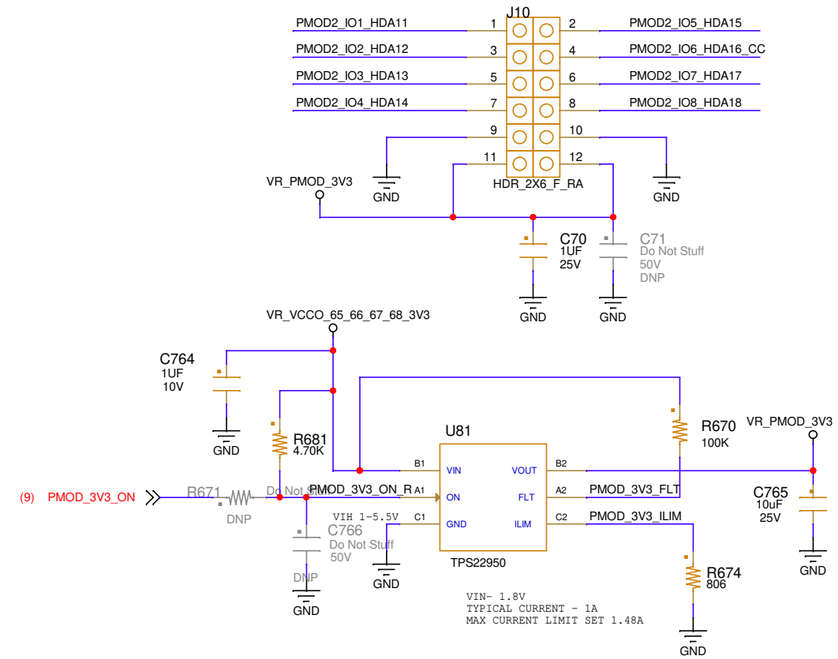

PMOD3

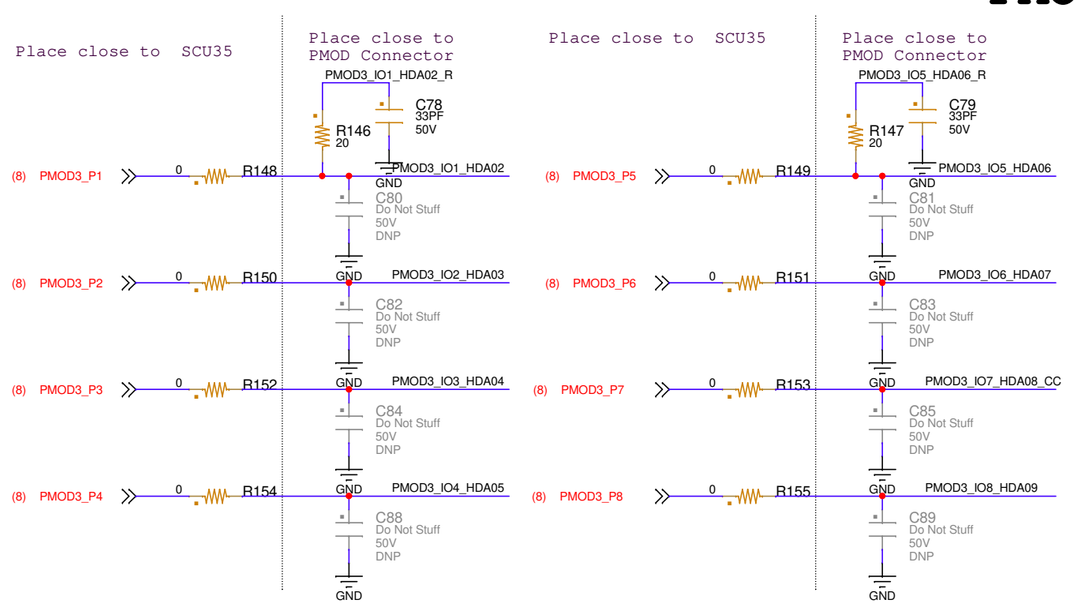

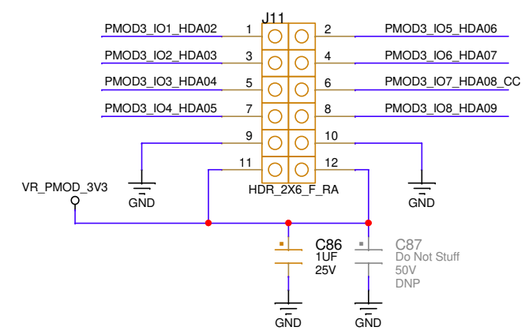

SCU35 is not compatible with PMODs that output 5V signals.

AECG-DCCG
2100 Logic Drive
San Jose, CA 95124

PAGE:	13_PMOD 2&3
PAGE NUMBER:	13 OF 33
DOC NO:	038-05204-01
DATE: Friday, March 28, 2025	REV: A4
SKU: BASE	

CONFIDENTIAL AND PROPRIETARY TO ADVANCED MICRO DEVICES INC.
© 2024 Advanced Micro Devices
This AMD Board schematic and design is the exclusive property of AMD, and is provided only to entities under a non-disclosure agreement with AMD for evaluation purposes. Further distribution or disclosure is strictly prohibited. Use of this schematic and design for any purpose other than evaluation requires a Board Technology License Agreement with AMD. AMD makes no representations or warranties of any kind regarding this schematic and design, including, not limited to, any implied warranty of merchantability or fitness for a particular purpose, and disclaims responsibility for any consequences resulting from use of the information included herein.

TITLE: EK-SCU35-PP-G

RASPBERRY PI EXPANSION HEADER -1

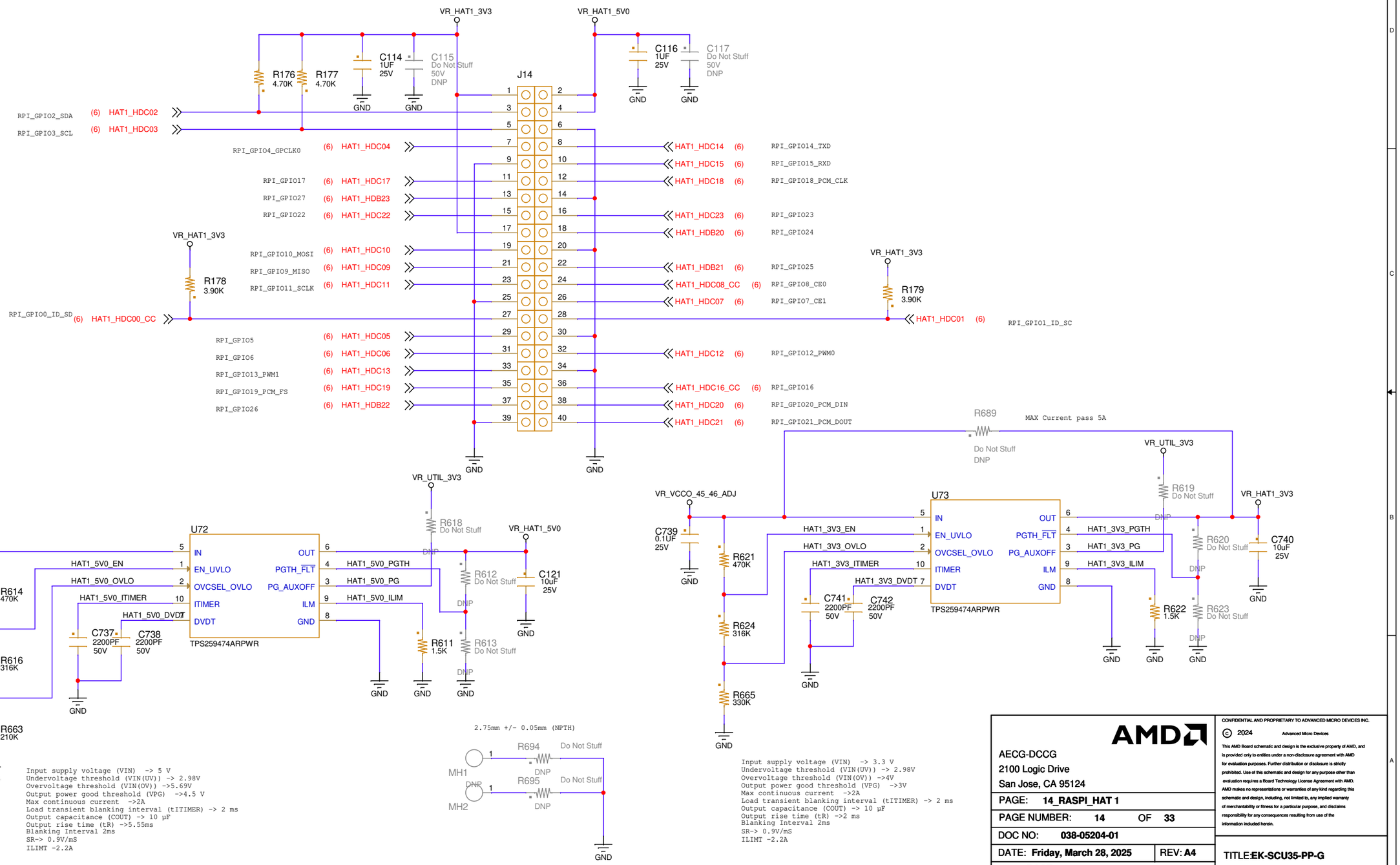

AMD

AECG-DCCG
2100 Logic Drive
San Jose, CA 95124

PAGE: 14_RASPI_HAT 1	
PAGE NUMBER: 14 OF 33	
DOC NO: 038-05204-01	
DATE: Friday, March 28, 2025	REV: A4
SKU: BASE	

CONFIDENTIAL AND PROPRIETARY TO ADVANCED MICRO DEVICES INC.

© 2024 Advanced Micro Devices

This AMD Board schematic and design is the exclusive property of AMD, and is provided only to entities under a non-disclosure agreement with AMD for evaluation purposes. Further distribution or disclosure is strictly prohibited. Use of this schematic and design for any purpose other than evaluation requires a Board Technology License Agreement with AMD. AMD makes no representations or warranties of any kind regarding this schematic and design, including, not limited to, any implied warranty of merchantability or fitness for a particular purpose, and disclaims responsibility for any consequences resulting from use of the information included herein.

TITLE: EK-SCU35-PP-G

RASPBERRY PI EXPANSION HEADER -2

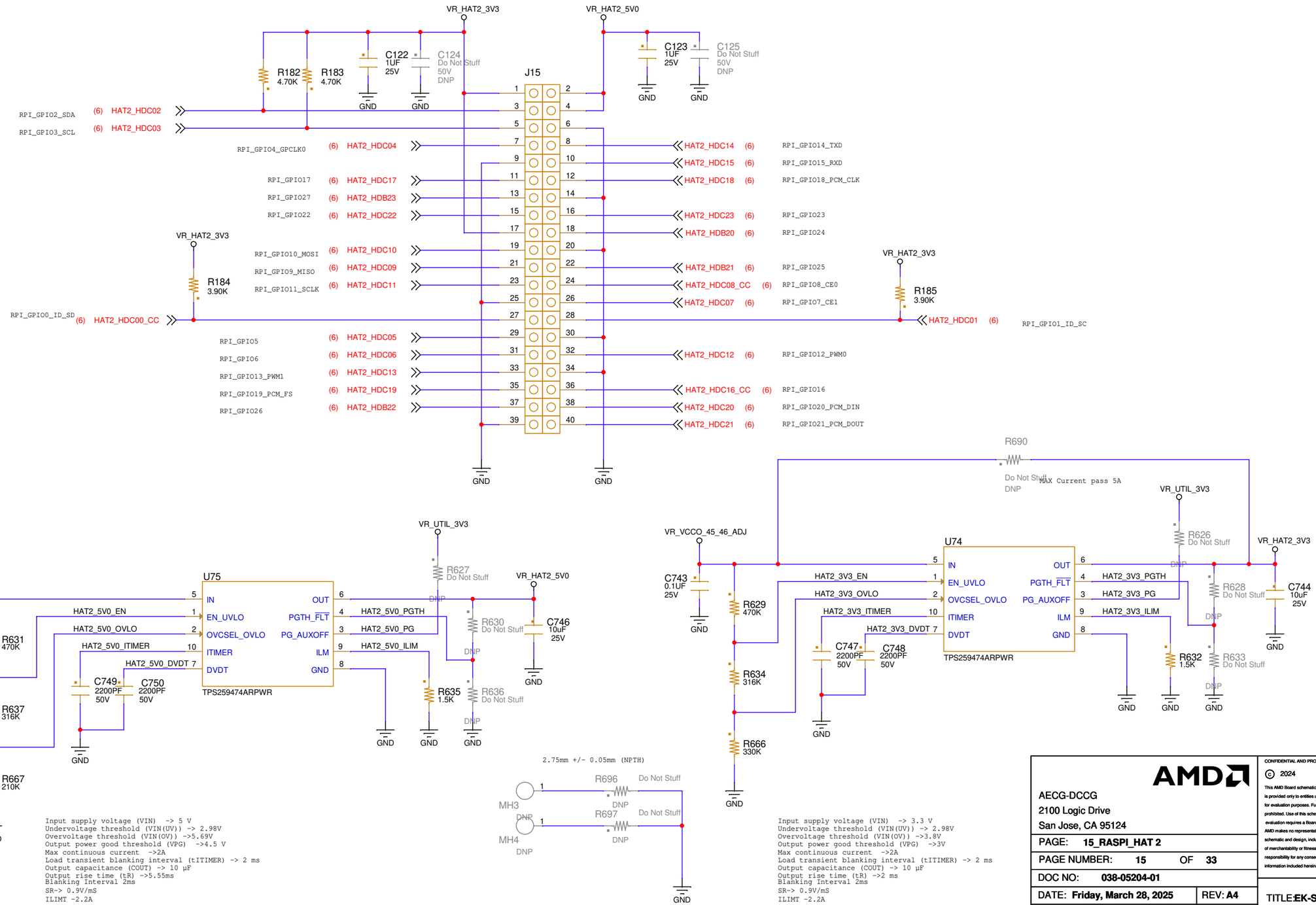

AMD

AECG-DCCG
2100 Logic Drive
San Jose, CA 95124

PAGE:	15_RASPI_HAT 2
PAGE NUMBER:	15 OF 33
DOC NO:	038-05204-01
DATE: Friday, March 28, 2025	REV: A4
SKU: BASE	

CONFIDENTIAL AND PROPRIETARY TO ADVANCED MICRO DEVICES INC.

© 2024 Advanced Micro Devices

This AMD Board schematic and design is the exclusive property of AMD, and is provided only to entities under a non-disclosure agreement with AMD for evaluation purposes. Further distribution or disclosure is strictly prohibited. Use of this schematic and design for any purpose other than evaluation requires a Board Technology License Agreement with AMD. AMD makes no representations or warranties of any kind regarding this schematic and design, including, not limited to, any implied warranty of merchantability or fitness for a particular purpose, and disclaims responsibility for any consequences resulting from use of the information included herein.

TITLE: EK-SCU35-PP-G

ARDUINO SHIELD CONNECTOR

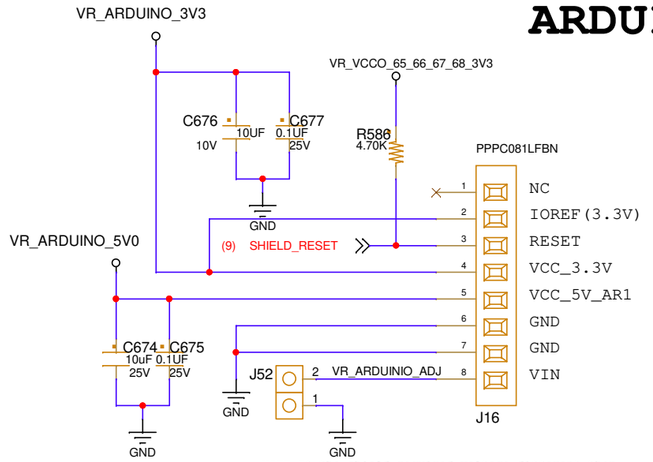

NOTE-If the shield required voltage different then 5V then apply the desired voltage on connector J52

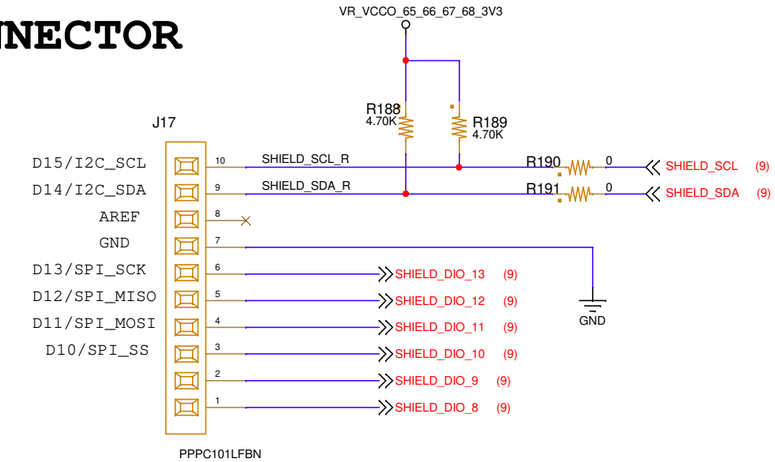

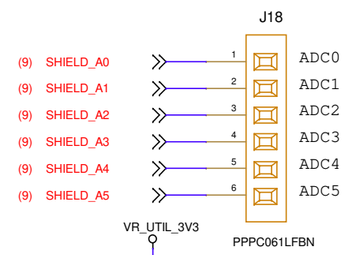

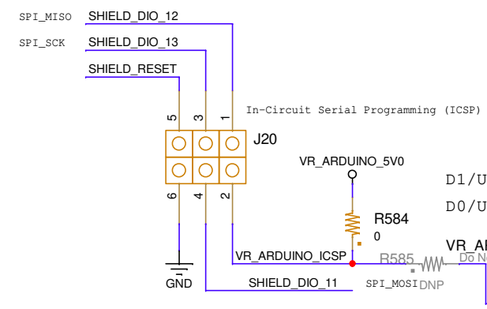

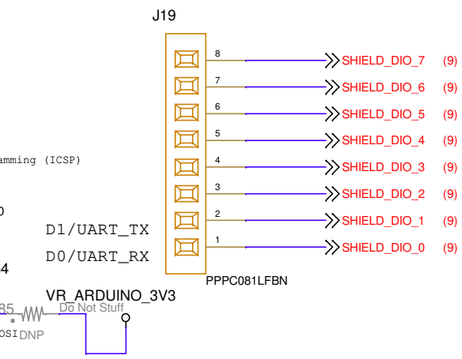

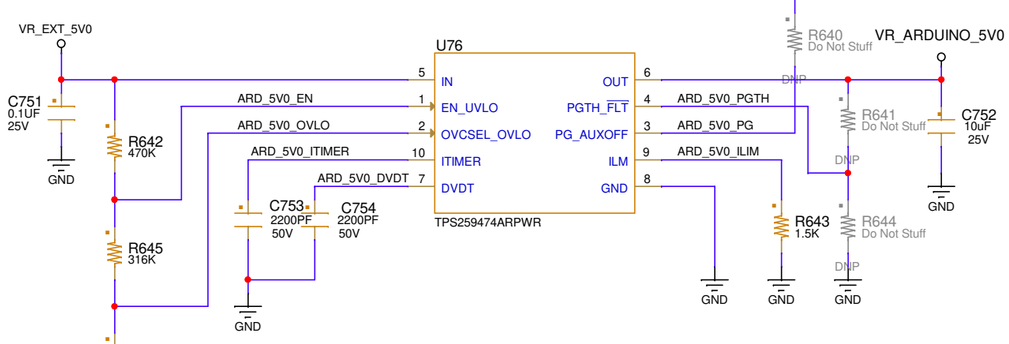

Input supply voltage (VIN) -> 5 V
Undervoltage threshold (VIN(UV)) -> 2.98V
Overvoltage threshold (VIN(OV)) ->5.69V
Output power good threshold (VPG) ->4.5 V
Max continuous current ->2A
Load transient blanking interval (tITIMER) -> 2 ms
Output capacitance (COUT) -> 10 µF
Output rise time (tR) ->5.55ms
Blanking Interval 2ms
SR-> 0.9V/mS
ILIMT -2.21A

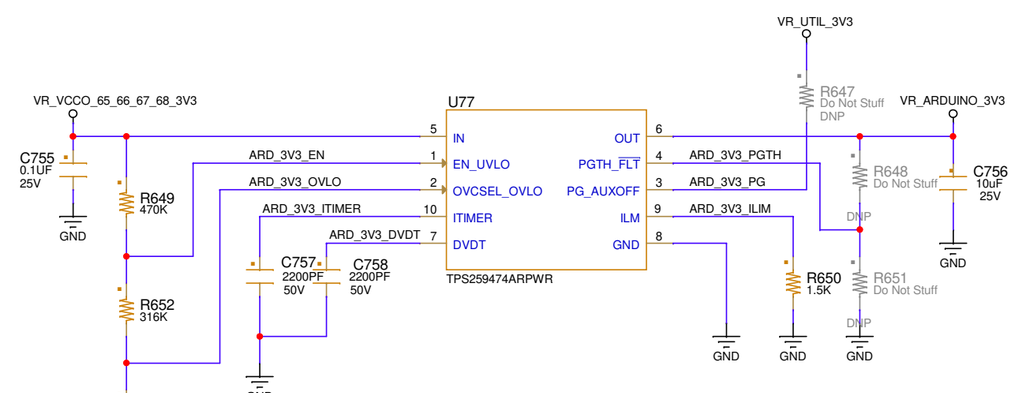

Input supply voltage (VIN) -> 3.3 V
Undervoltage threshold (VIN(UV)) -> 2.98V
Overvoltage threshold (VIN(OV)) ->3.8V
Output power good threshold (VPG) ->3V
Max continuous current ->2A
Load transient blanking interval (tITIMER) -> 2 ms
Output capacitance (COUT) -> 10 µF
Output rise time (tR) ->2 ms
Blanking Interval 2ms
SR-> 0.9V/mS
ILIMT -2.2A

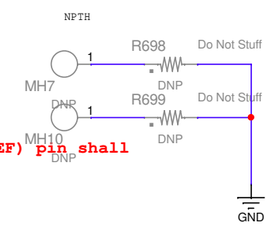

NOTE-
SCU35 shall not support Power Shield. VIN (VCC_5V(RESERVED))shall be left unconnected.
SU35P will be using internal reference voltage for ADC operation. Analog reference (AREF) pin shall be left unconnected.

CAD Note- Keep J52 Nearby to the J16. Make Plan for ARDUINO_ADJ@3A
C676 C677 KEEP NEARBY TO CONNECTOR PIN
C674,C675 KEEP NEARBY TO CONNECTOR PIN

AMD
AECG-DCCG
2100 Logic Drive
San Jose, CA 95124

PAGE:	16_ARDUINO SHIELD
PAGE NUMBER:	16 OF 33
DOC NO:	038-05204-01
DATE: Friday, March 28, 2025	REV: A4
SKU: BASE	

CONFIDENTIAL AND PROPRIETARY TO ADVANCED MICRO DEVICES INC.
© 2024 Advanced Micro Devices
This AMD Board schematic and design is the exclusive property of AMD, and is provided only to entities under a non-disclosure agreement with AMD for evaluation purposes. Further distribution or disclosure is strictly prohibited. Use of this schematic and design for any purpose other than evaluation requires a Board Technology License Agreement with AMD. AMD makes no representations or warranties of any kind regarding this schematic and design, including, not limited to, any implied warranty of merchantability or fitness for a particular purpose, and disclaims responsibility for any consequences resulting from use of the information included herein.

TITLE:EK-SCU35-PP-G

HSIO CONNECTOR

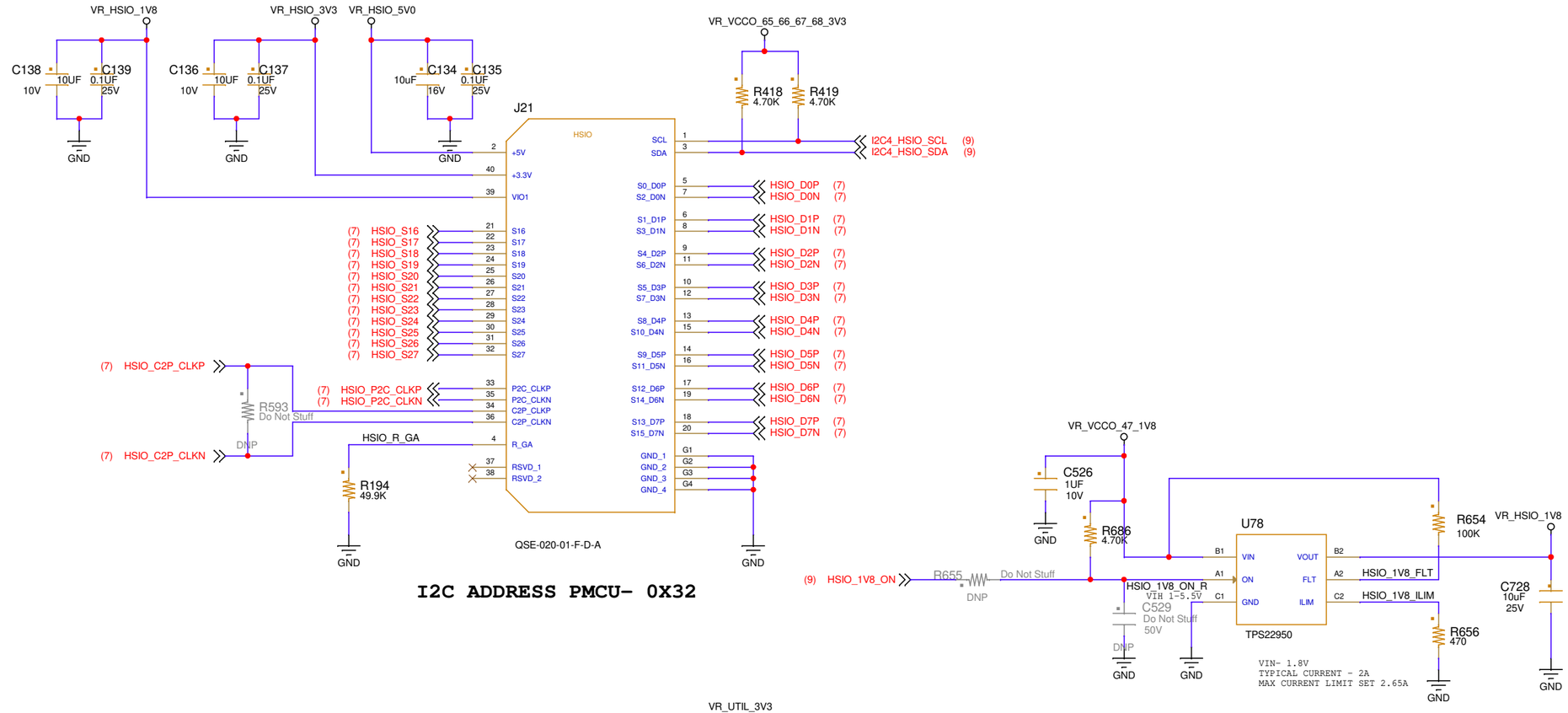

I2C ADDRESS PMCU– 0X32

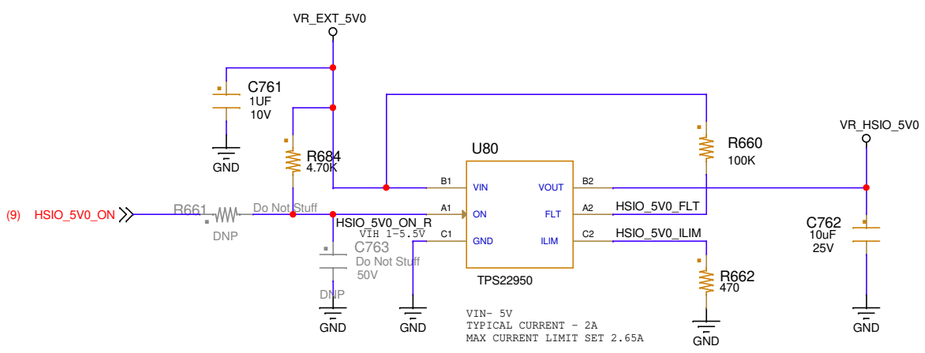

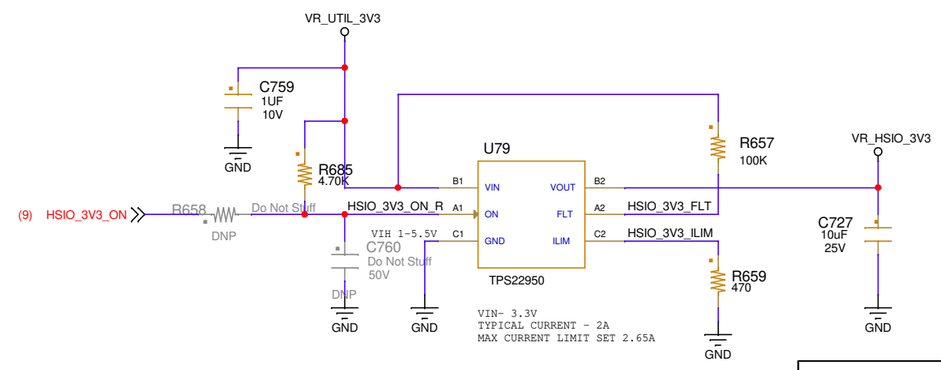

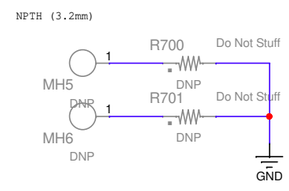

SCU35 shall support a single voltage of 1.8V on the VIO
HSIO interface supports Only Standard POD interconnect

CAD NOTE–
R593 Keep at the connector PIN

AMD

AECG-DCCG
2100 Logic Drive
San Jose, CA 95124

PAGE:	17_HSIO
PAGE NUMBER:	17 OF 33
DOC NO:	038-05204-01
DATE: Friday, March 28, 2025	REV: A4
SKU: BASE	

CONFIDENTIAL AND PROPRIETARY TO ADVANCED MICRO DEVICES INC.
© 2024 Advanced Micro Devices
This AMD Board schematic and design is the exclusive property of AMD, and is provided only to entities under a non-disclosure agreement with AMD for evaluation purposes. Further distribution or disclosure is strictly prohibited. Use of this schematic and design for any purpose other than evaluation requires a Board Technology License Agreement with AMD. AMD makes no representations or warranties of any kind regarding this schematic and design, including, not limited to, any implied warranty of merchantability or fitness for a particular purpose, and disclaims responsibility for any consequences resulting from use of the information included herein.

TITLE: EK-SCU35-PP-G

MIKROE CLICK 1 & 2

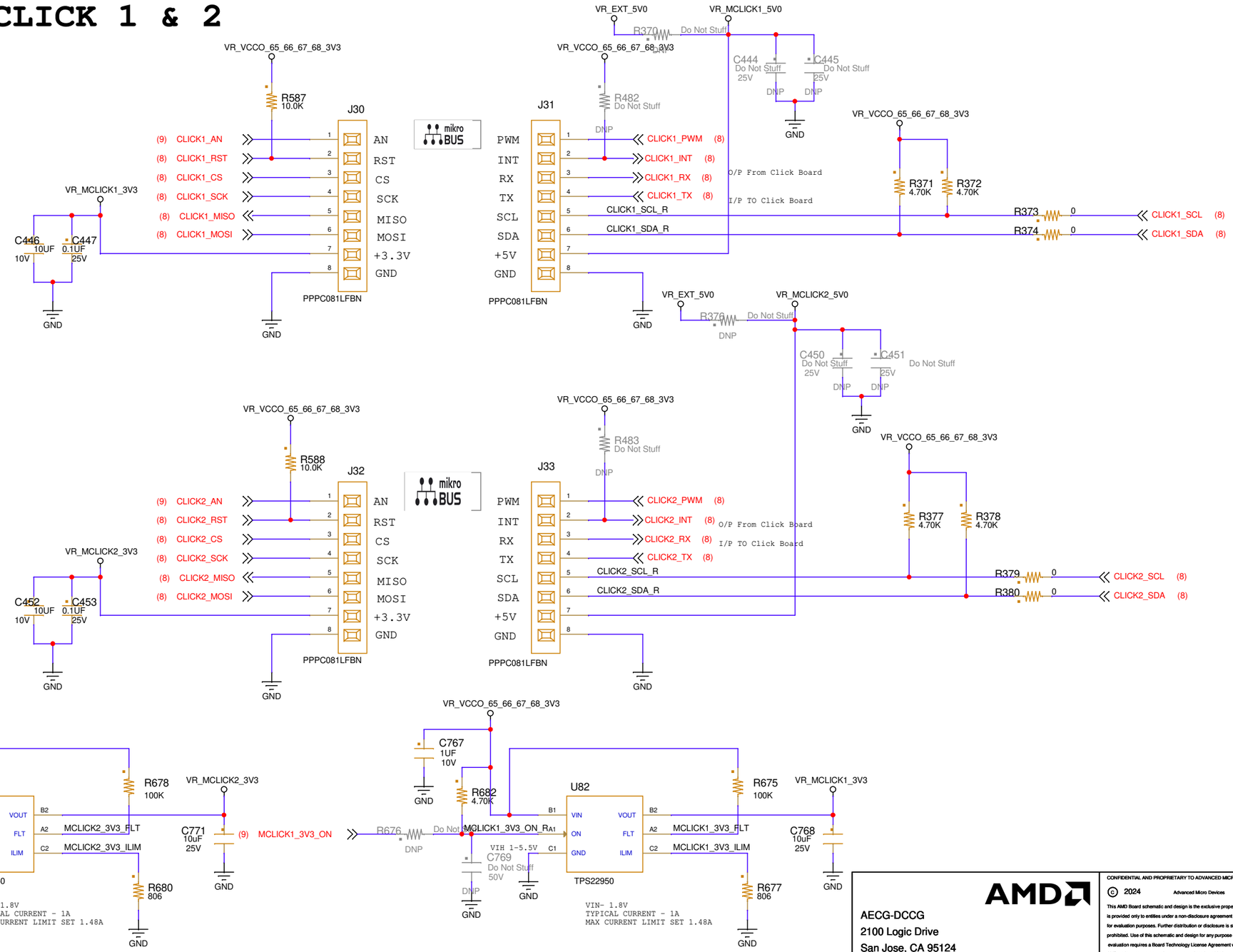

To prevent damage of EK-SCU35 Board. 5V Clicks is not supported

AMD

AECG-DCCG
2100 Logic Drive
San Jose, CA 95124

PAGE:	18_MIKROE_CLICK_1&2
PAGE NUMBER:	18 OF 33
DOC NO:	038-05204-01
DATE: Friday, March 28, 2025	REV: A4
SKU: BASE	

CONFIDENTIAL AND PROPRIETARY TO ADVANCED MICRO DEVICES INC.

© 2024 Advanced Micro Devices

This AMD Board schematic and design is the exclusive property of AMD, and is provided only to entities under a non-disclosure agreement with AMD for evaluation purposes. Further distribution or disclosure is strictly prohibited. Use of this schematic and design for any purpose other than evaluation requires a Board Technology License Agreement with AMD. AMD makes no representations or warranties of any kind regarding this schematic and design, including, not limited to, any implied warranty of merchantability or fitness for a particular purpose, and disclaims responsibility for any consequences resulting from use of the information included herein.

TITLE: EK-SCU35-PP-G

DEBUG HEADER LOOPBACK HD

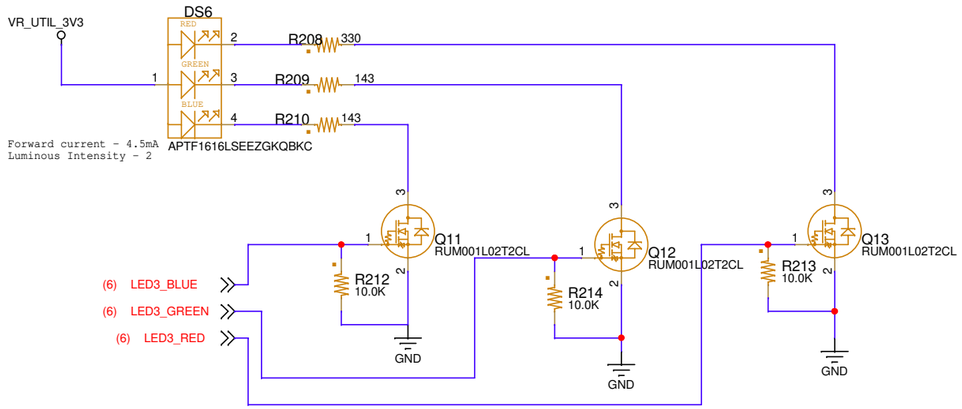

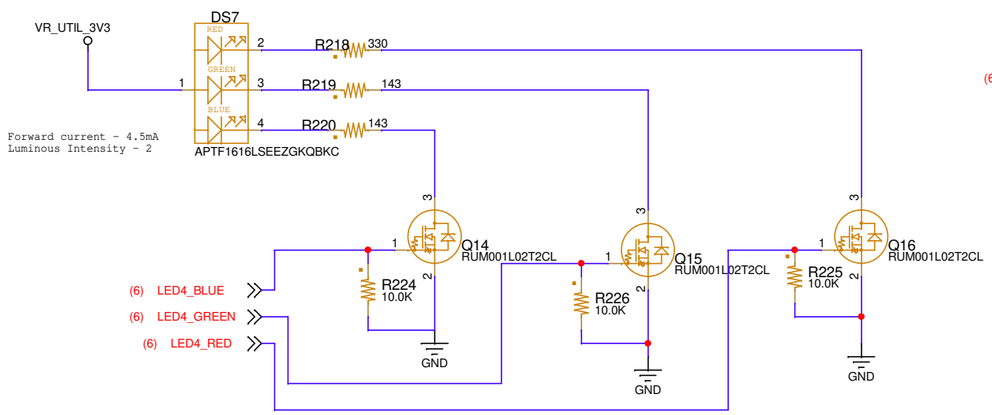

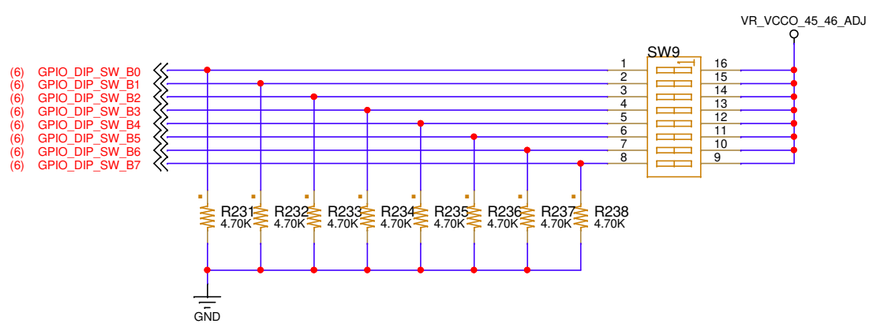

DEBUG HEADER LOOPBACK HP

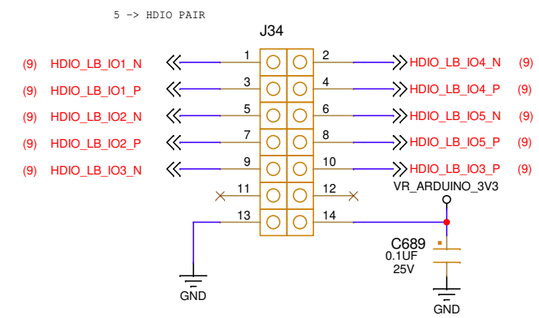

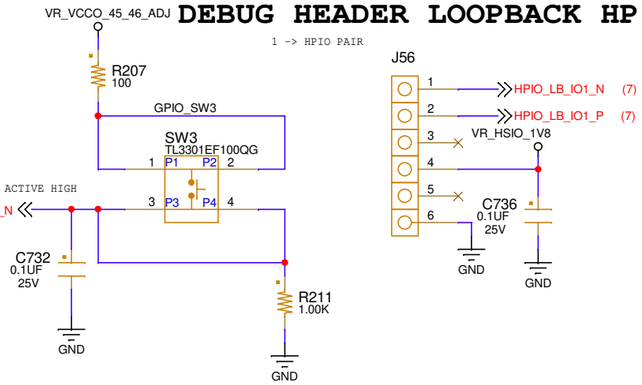

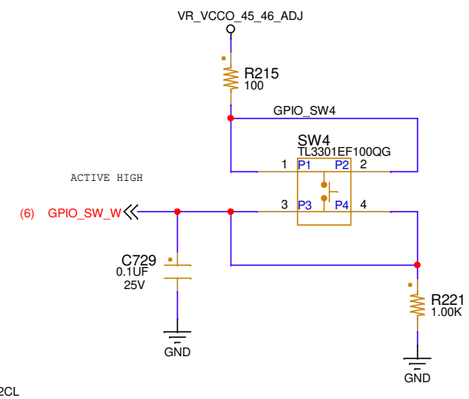

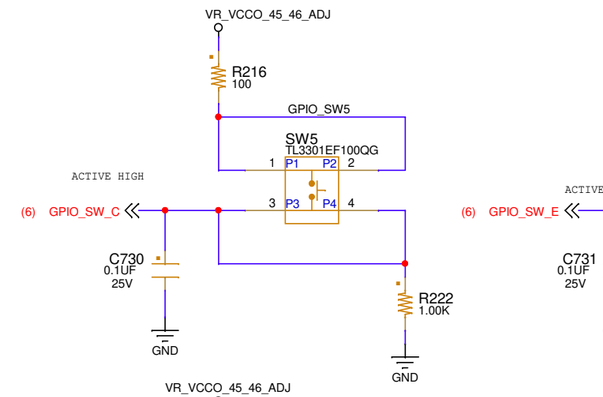

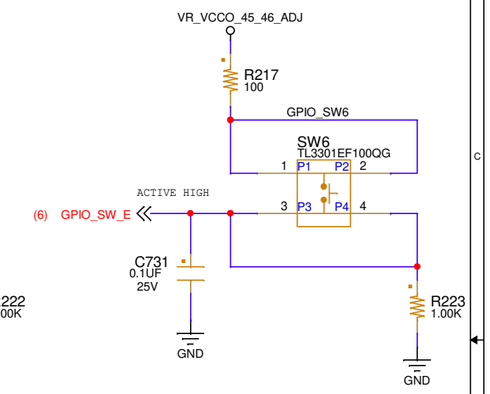

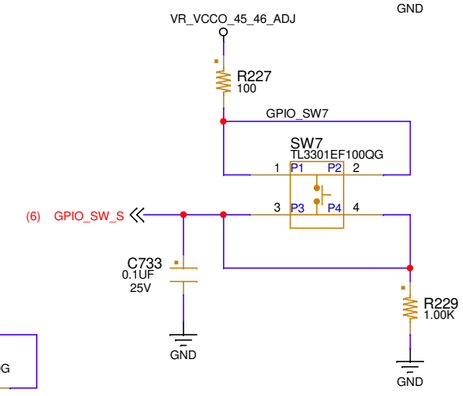

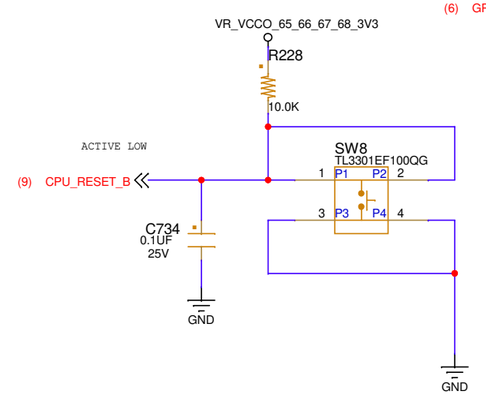

AMD

AECG-DCCG
2100 Logic Drive
San Jose, CA 95124

PAGE:	19_LED_DIP SW_PUSH BUTTON
PAGE NUMBER:	19 OF 33
DOC NO:	038-05204-01
DATE: Friday, March 28, 2025	REV: A4
SKU: BASE	

CONFIDENTIAL AND PROPRIETARY TO ADVANCED MICRO DEVICES INC.

© 2024 Advanced Micro Devices

This AMD Board schematic and design is the exclusive property of AMD, and is provided only to entities under a non-disclosure agreement with AMD for evaluation purposes. Further distribution or disclosure is strictly prohibited. Use of this schematic and design for any purpose other than evaluation requires a Board Technology License Agreement with AMD. AMD makes no representations or warranties of any kind regarding this schematic and design, including, not limited to, any implied warranty of merchantability or fitness for a particular purpose, and disclaims responsibility for any consequences resulting from use of the information included herein.

TITLE: EK-SCU35-PP-G

MII PHY & CONNECTOR

TOP & BOTTOM DNP Will be completely Remove after fianl review of schematic.(If not required)

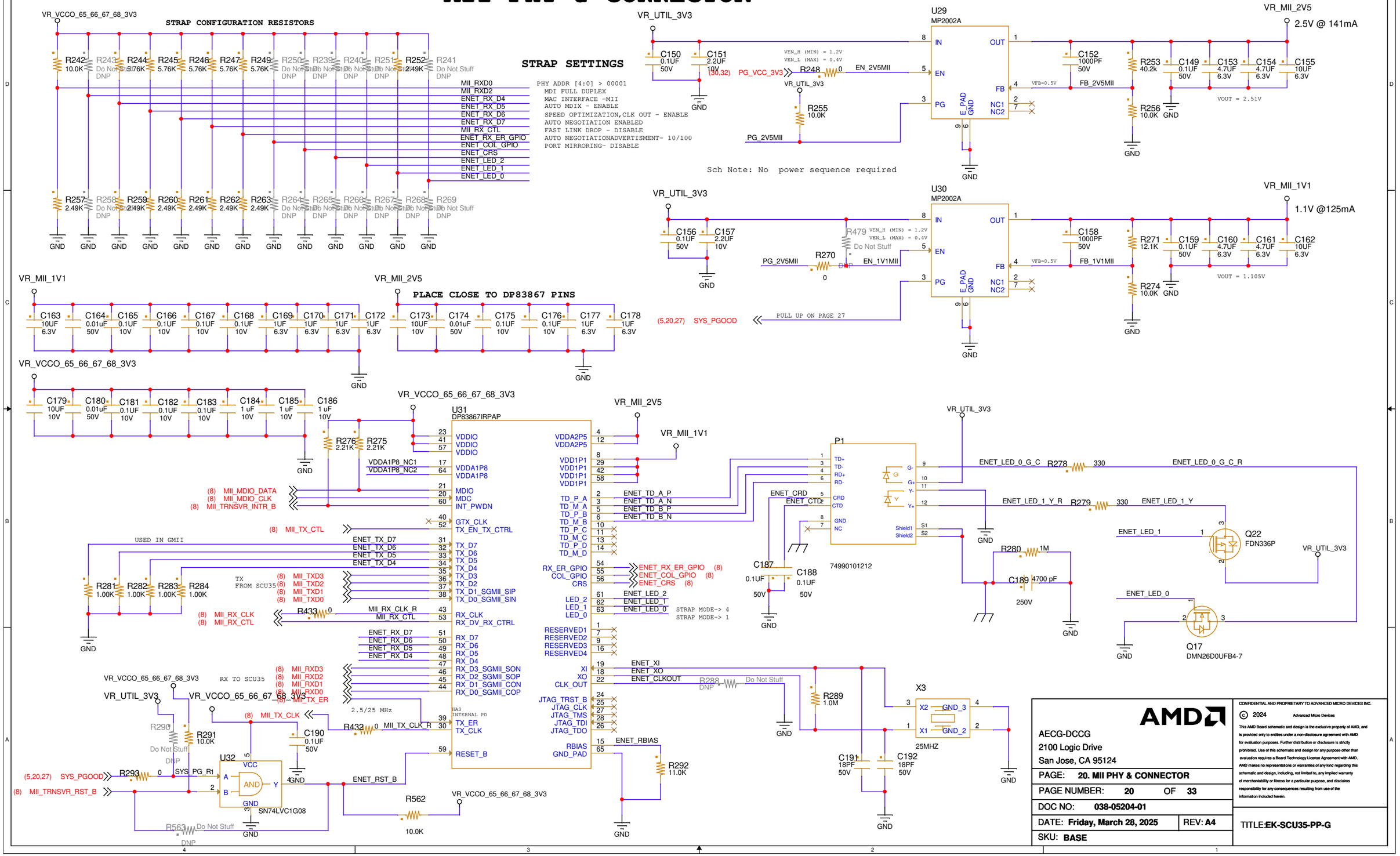

AECG-DCCG
2100 Logic Drive
San Jose, CA 95124

PAGE: 20. MII PHY & CONNECTOR
PAGE NUMBER: 20 OF 33
DOC NO: 038-05204-01
DATE: Friday, March 28, 2025 REV: A4
SKU: BASE

CONFIDENTIAL AND PROPRIETARY TO ADVANCED MICRO DEVICES INC.
© 2024 Advanced Micro Devices
This AMD Board schematic and design is the exclusive property of AMD, and is provided only to entities under a non-disclosure agreement with AMD for evaluation purposes. Further distribution or disclosure is strictly prohibited. Use of this schematic and design for any purpose other than evaluation requires a Board Technology License Agreement with AMD. AMD makes no representations or warranties of any kind regarding this schematic and design, including, not limited to, any implied warranty of merchantability or fitness for a particular purpose, and disclaims responsibility for any consequences resulting from use of the information included herein.

TITLE: EK-SCU35-PP-G

AECG-DCCG
2100 Logic Drive
San Jose, CA 95124

PAGE: **21_SCU35_POWER 1**

PAGE NUMBER: **21** OF **33**

DOC NO: **038-05204-01**

DATE: **Friday, March 28, 2025** REV: **A4**

SKU: **BASE**

CONFIDENTIAL AND PROPRIETARY TO ADVANCED MICRO DEVICES INC.

© 2024 Advanced Micro Devices

This AMD Board schematic and design is the exclusive property of AMD, and is provided only to entities under a non-disclosure agreement with AMD for evaluation purposes. Further distribution or disclosure is strictly prohibited. Use of this schematic and design for any purpose other than evaluation requires a Board Technology License Agreement with AMD. AMD makes no representations or warranties of any kind regarding this schematic and design, including, not limited to, any implied warranty of merchantability or fitness for a particular purpose, and disclaims responsibility for any consequences resulting from use of the information included herein.

TITLE: **EK-SCU35-PP-G**

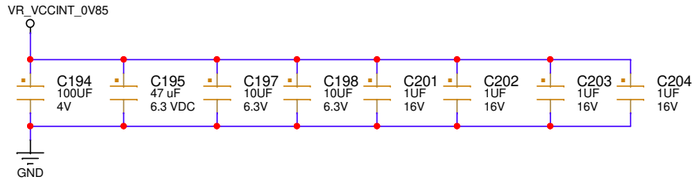


```
VR_VCCINT_0V85:
330uF:  0
100uF:  1
47uF:  1
22uF: 0
10uF:  2
1uF: 4
```

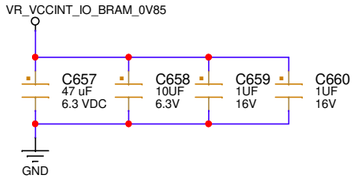


```
VR_VCCINT_IO_BRAM_0V85:
330uF:  0
100uF:  0
47uF:  1
22uF: 0
10uF:  1
1uF: 2
```

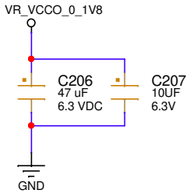


```
VR_VCCO_0_1V8:
330uF:  0
100uF:  0
47uF:  1
22uF: 0
10uF:  1
1uF: 0
```

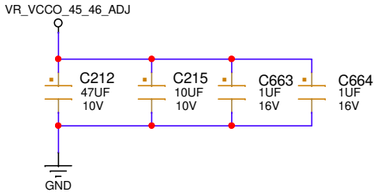


```
VR_VCCO_45_46_ADJ:
330uF:  0
100uF:  0
47uF:  1
22uF: 0
10uF:  1
1uF: 2
```

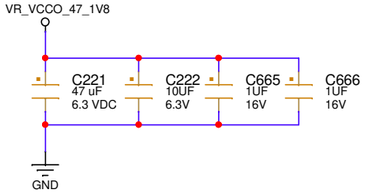


```
VR_VCCO_47_1V8:
330uF:  0
100uF:  0
47uF:  1
22uF: 0
10uF:  1
1uF: 2
```

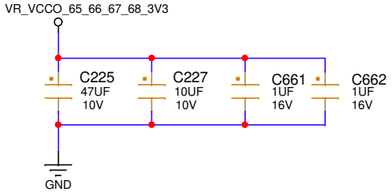


```
VR_VCCO_65_66_67_68_3V3:
330uF:  0
100uF:  0
47uF:  1
22uF: 0
10uF:  1
1uF: 2
```

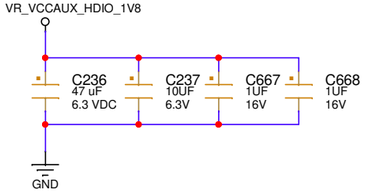


```
VR_VCCAUX_HDIO_1V8:
330uF:  0
100uF:  0
47uF:  1
22uF: 0
10uF:  1
1uF: 2
```

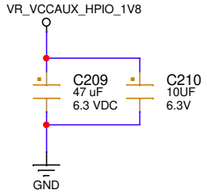


```
VR_VCCAUX_HDIO_1V8:
330uF:  0
100uF:  0
47uF:  1
10uF:  1
1uF: 0
```

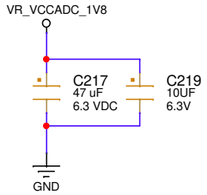


```
VR_VCCADC_1V8:
330uF:  0
100uF:  0
47uF:  1
10uF:  1
1uF: 0
```

AECG-DCCG
2100 Logic Drive
San Jose, CA 95124

PAGE:	22_SCU35_DECOUPLING-1
PAGE NUMBER:	22 OF 33
DOC NO:	038-05204-01
DATE: Friday, March 28, 2025	REV: A4
SKU: BASE	

CONFIDENTIAL AND PROPRIETARY TO ADVANCED MICRO DEVICES INC.
© 2024 Advanced Micro Devices
This AMD Board schematic and design is the exclusive property of AMD, and is provided only to entities under a non-disclosure agreement with AMD for evaluation purposes. Further distribution or disclosure is strictly prohibited. Use of this schematic and design for any purpose other than evaluation requires a Board Technology License Agreement with AMD. AMD makes no representations or warranties of any kind regarding this schematic and design, including, not limited to, any implied warranty of merchantability or fitness for a particular purpose, and disclaims responsibility for any consequences resulting from use of the information included herein.

TITLE: EK-SCU35-PP-G

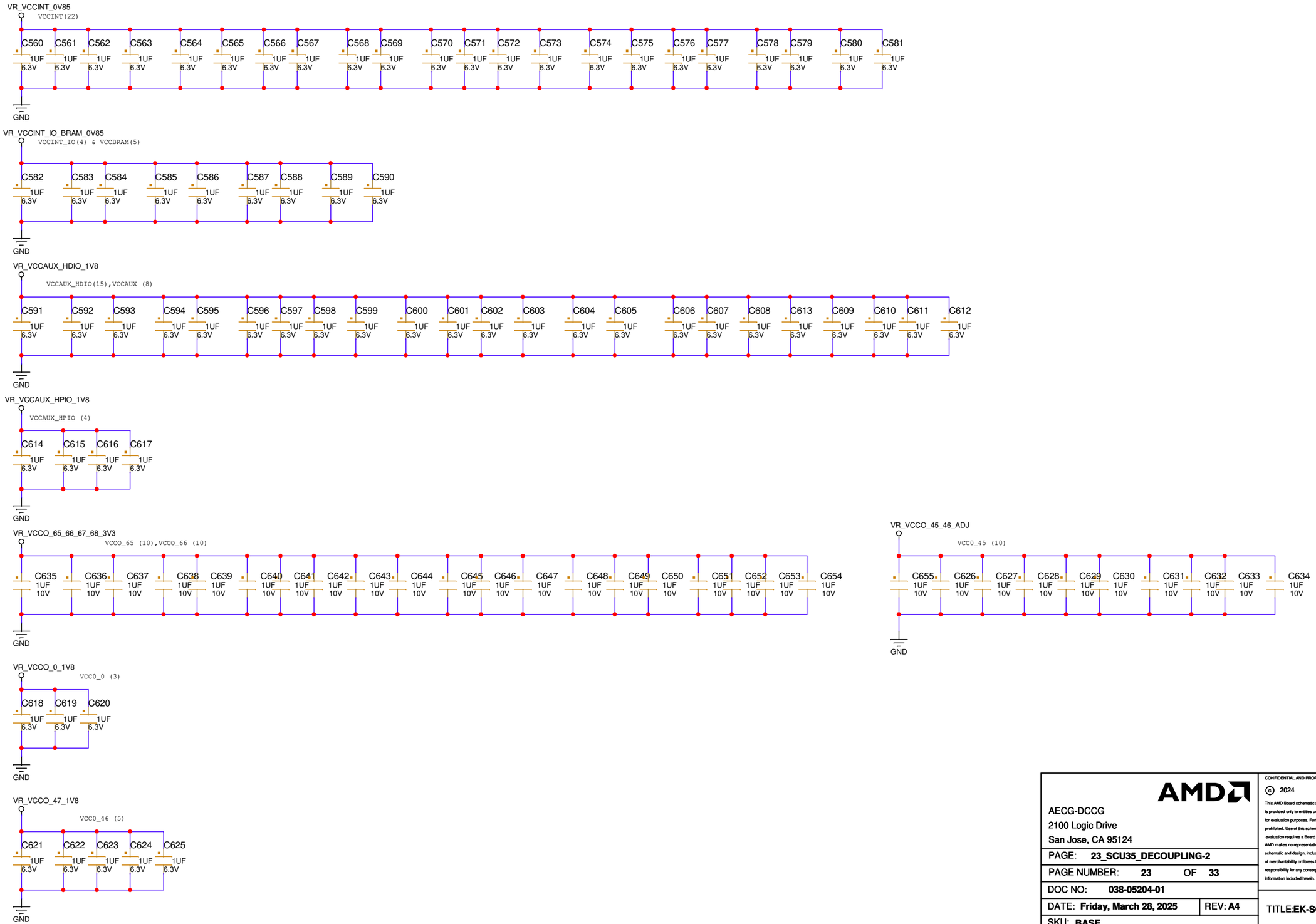

AECG-DCCG
2100 Logic Drive
San Jose, CA 95124

PAGE:	23_SCU35_DECOUPLING-2
PAGE NUMBER:	23 OF 33
DOC NO:	038-05204-01
DATE: Friday, March 28, 2025	REV: A4
SKU: BASE	

CONFIDENTIAL AND PROPRIETARY TO ADVANCED MICRO DEVICES INC.
© 2024 Advanced Micro Devices
This AMD Board schematic and design is the exclusive property of AMD, and is provided only to entities under a non-disclosure agreement with AMD for evaluation purposes. Further distribution or disclosure is strictly prohibited. Use of this schematic and design for any purpose other than evaluation requires a Board Technology License Agreement with AMD. AMD makes no representations or warranties of any kind regarding this schematic and design, including, not limited to, any implied warranty of merchantability or fitness for a particular purpose, and disclaims responsibility for any consequences resulting from use of the information included herein.

TITLE: EK-SCU35-PP-G

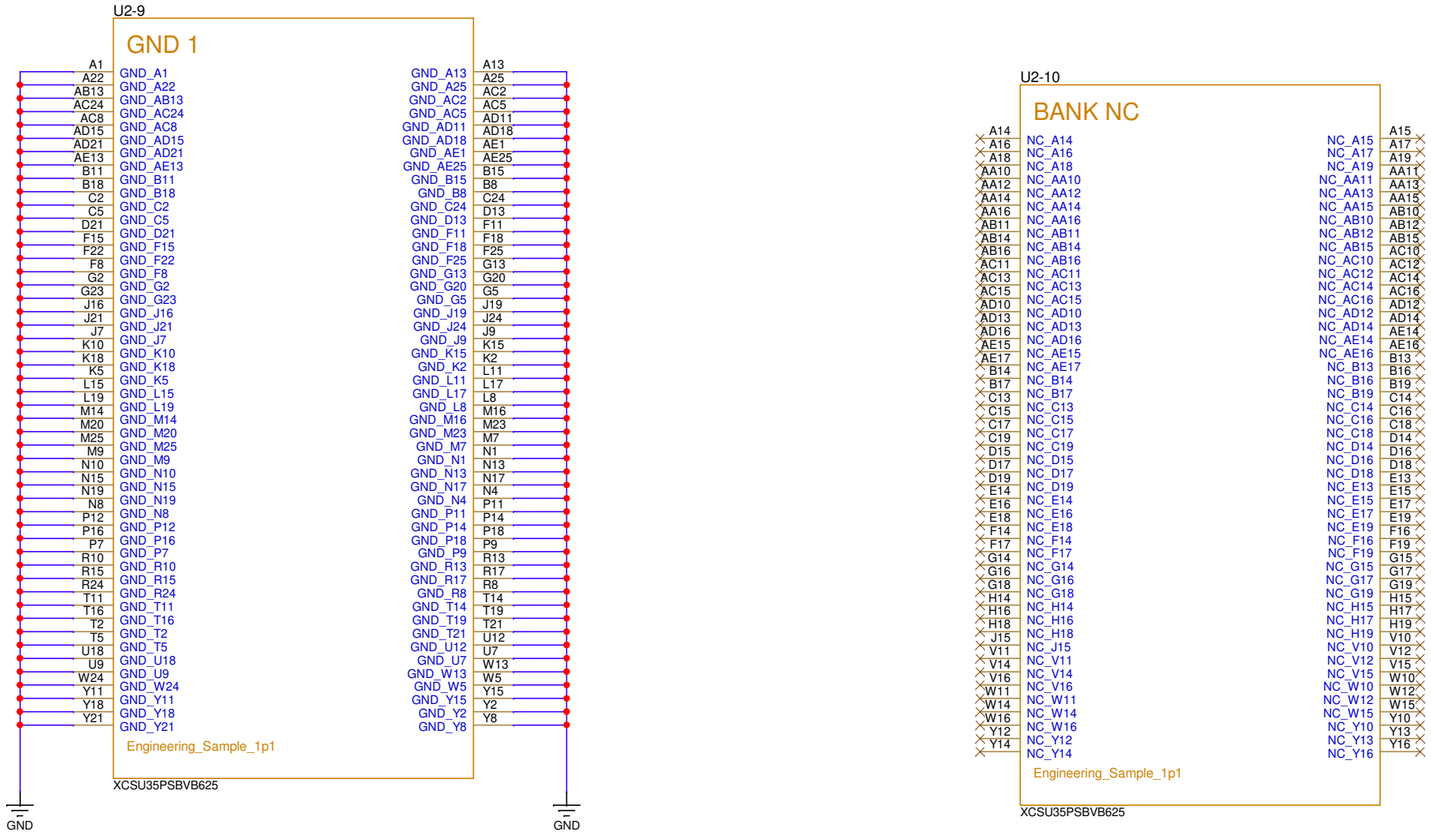

AECG-DCCG
2100 Logic Drive
San Jose, CA 95124

PAGE:	**24_SCU35_ BANK GND**
PAGE NUMBER:	**24** OF **33**
DOC NO:	**038-05204-01**
DATE: **Friday, March 28, 2025**	REV: **A4**
SKU: **BASE**	

CONFIDENTIAL AND PROPRIETARY TO ADVANCED MICRO DEVICES INC.
© 2024 Advanced Micro Devices
This AMD Board schematic and design is the exclusive property of AMD, and is provided only to entities under a non-disclosure agreement with AMD for evaluation purposes. Further distribution or disclosure is strictly prohibited. Use of this schematic and design for any purpose other than evaluation requires a Board Technology License Agreement with AMD. AMD makes no representations or warranties of any kind regarding this schematic and design, including, not limited to, any implied warranty of merchantability or fitness for a particular purpose, and disclaims responsibility for any consequences resulting from use of the information included herein.

TITLE: **EK-SCU35-PP-G**

PD 3.0 SINK CONTROLLER

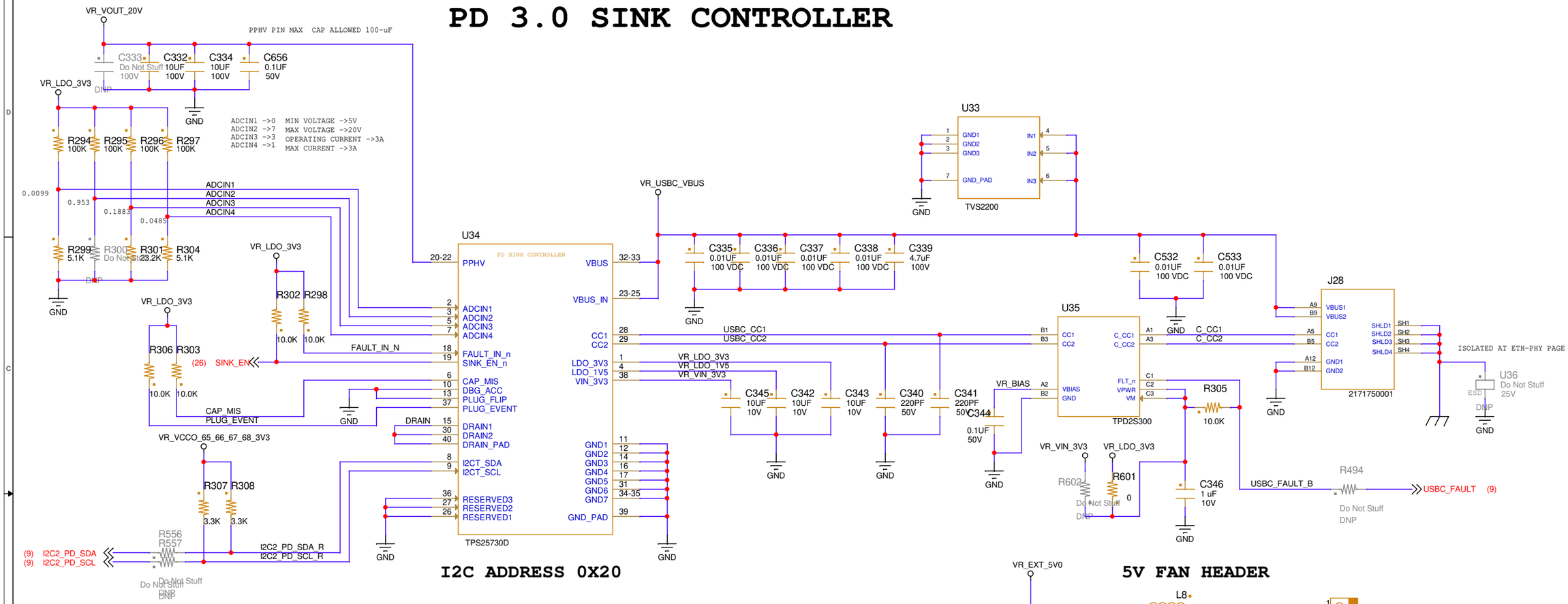

I2C ADDRESS 0X20

5V FAN HEADER

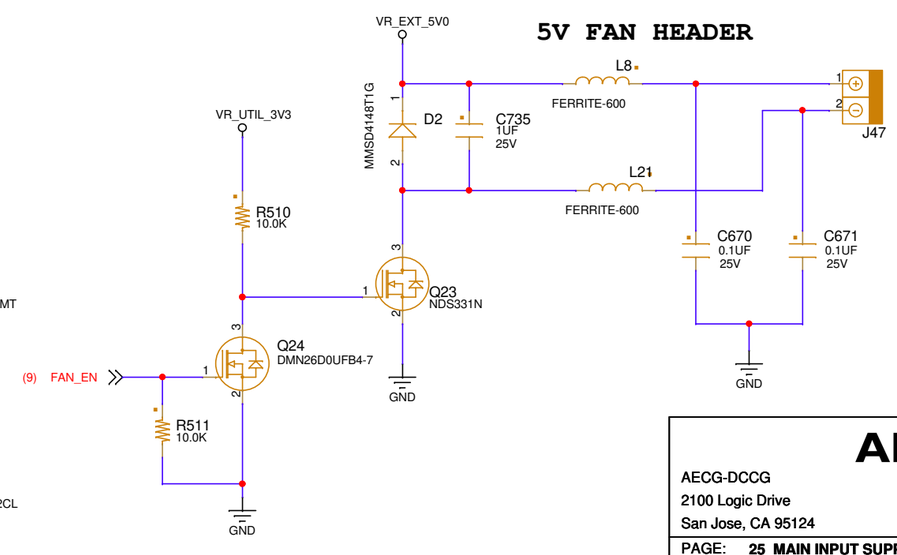

CAPABILITY_MISMATCH

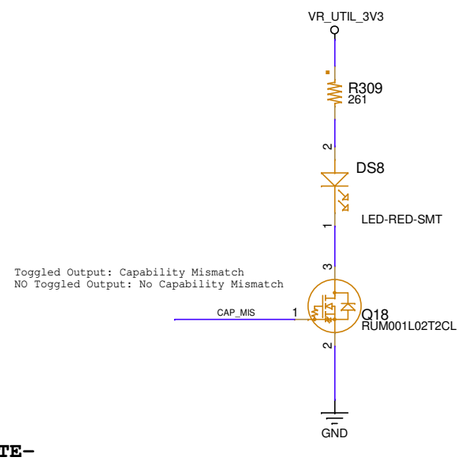

PLUG_EVENT

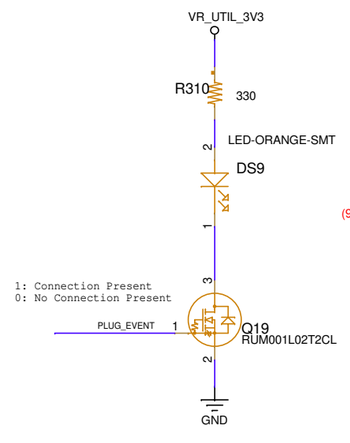

CAD NOTE-
optimum placement for the device TVS & TPD is as close to the connector as possible
Place C532,C533 nearby to the J28 connector
CC1,CC2 Route as straight as possible from J28 to U34

AMD

AECG-DCCG
2100 Logic Drive
San Jose, CA 95124

PAGE:	25_MAIN INPUT SUPPLY
PAGE NUMBER:	25 OF 33
DOC NO:	038-05204-01
DATE: Friday, March 28, 2025	REV: A4
SKU: BASE	

CONFIDENTIAL AND PROPRIETARY TO ADVANCED MICRO DEVICES INC.
© 2024 Advanced Micro Devices
This AMD Board schematic and design is the exclusive property of AMD, and is provided only to entities under a non-disclosure agreement with AMD for evaluation purposes. Further distribution or disclosure is strictly prohibited. Use of this schematic and design for any purpose other than evaluation requires a Board Technology License Agreement with AMD. AMD makes no representations or warranties of any kind regarding this schematic and design, including, not limited to, any implied warranty of merchantability or fitness for a particular purpose, and disclaims responsibility for any consequences resulting from use of the information included herein.

TITLE: EK-SCU35-PP-G

5V POWER SUPPLY

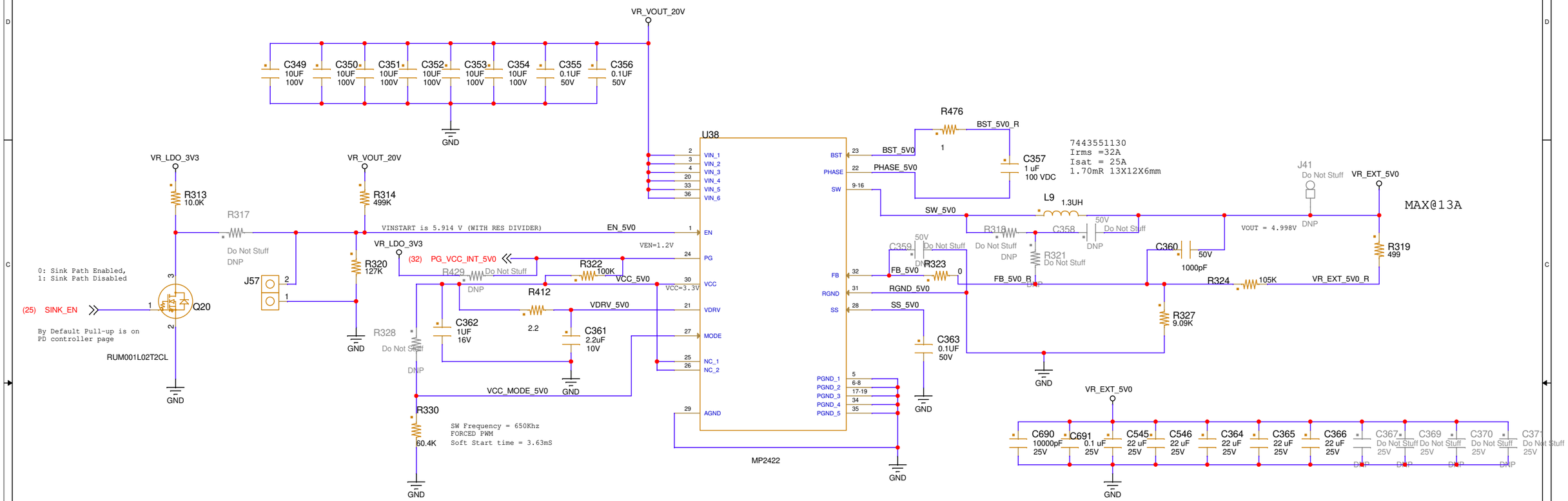

INA700_5V

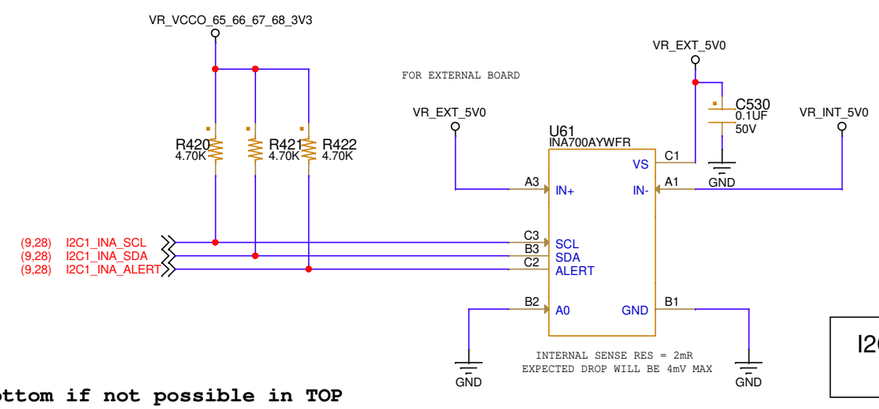

I2C ADDR
0X44

CAD NOTE
Please keep C367,C369,C370,C371 in Bottom if not possible in TOP

AMD

AECG-DCCG
2100 Logic Drive
San Jose, CA 95124

PAGE:	26_VR1_5V0	
PAGE NUMBER:	26 OF 33	
DOC NO:	038-05204-01	
DATE: Friday, March 28, 2025		REV: A4
SKU: BASE		

CONFIDENTIAL AND PROPRIETARY TO ADVANCED MICRO DEVICES INC.
© 2024 Advanced Micro Devices
This AMD Board schematic and design is the exclusive property of AMD, and is provided only to entities under a non-disclosure agreement with AMD for evaluation purposes. Further distribution or disclosure is strictly prohibited. Use of this schematic and design for any purpose other than evaluation requires a Board Technology License Agreement with AMD. AMD makes no representations or warranties of any kind regarding this schematic and design, including, not limited to, any implied warranty of merchantability or fitness for a particular purpose, and disclaims responsibility for any consequences resulting from use of the information included herein.

TITLE: EK-SCU35-PP-G

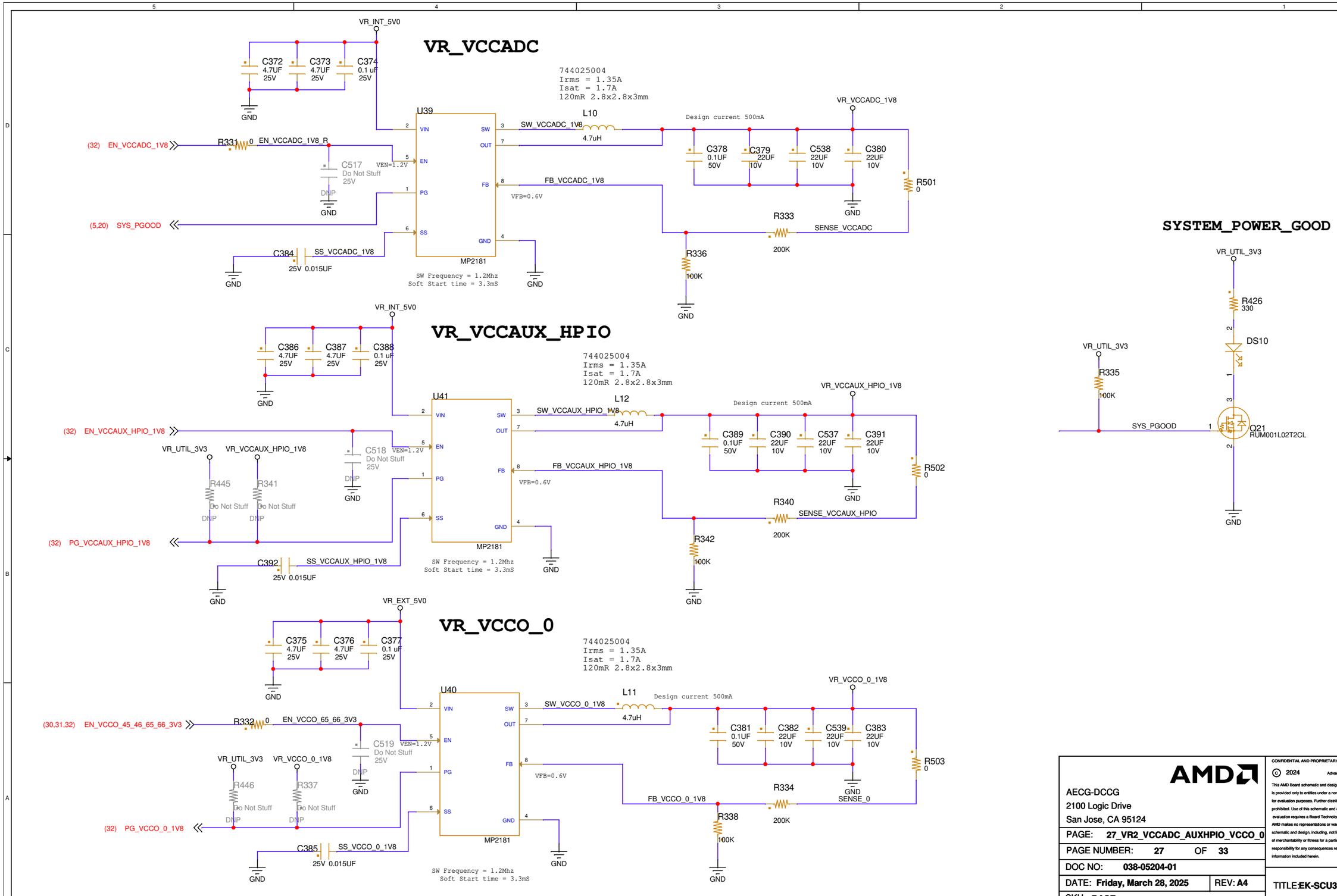

AMD

AECG-DCCG
2100 Logic Drive
San Jose, CA 95124

PAGE: 27_VR2_VCCADC_AUXHPIO_VCCO_0

PAGE NUMBER: 27 OF 33

DOC NO: 038-05204-01

DATE: Friday, March 28, 2025 REV: A4

SKU: BASE

CONFIDENTIAL AND PROPRIETARY TO ADVANCED MICRO DEVICES INC.

© 2024 Advanced Micro Devices

This AMD Board schematic and design is the exclusive property of AMD, and is provided only to entities under a non-disclosure agreement with AMD for evaluation purposes. Further distribution or disclosure is strictly prohibited. Use of this schematic and design for any purpose other than evaluation requires a Board Technology License Agreement with AMD. AMD makes no representations or warranties of any kind regarding this schematic and design, including, not limited to, any implied warranty of merchantability or fitness for a particular purpose, and disclaims responsibility for any consequences resulting from use of the information included herein.

TITLE: EK-SCU35-PP-G

VR_VCCINT

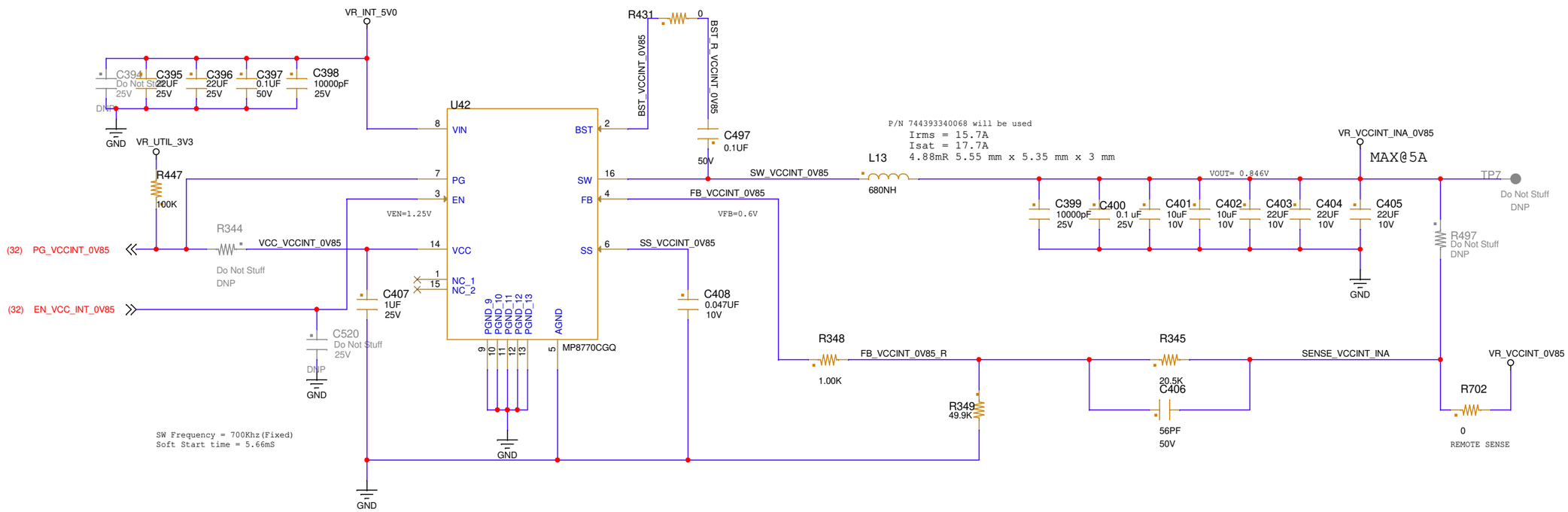

INA700_VCCINT

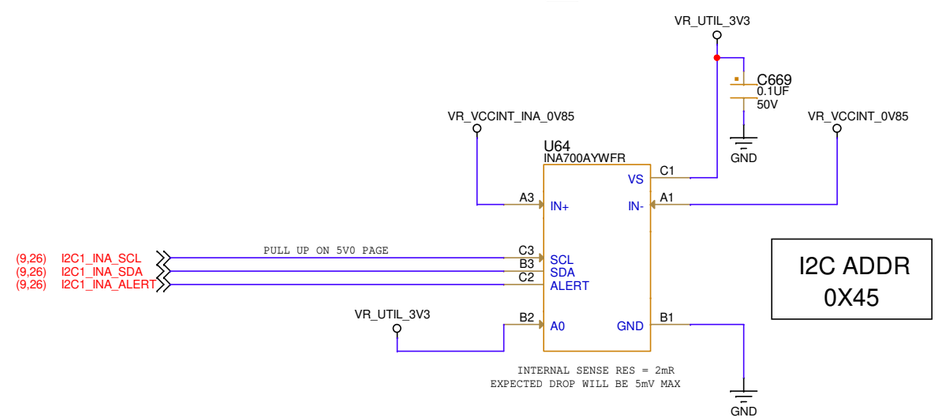

CAD Note:
Please connect SS cap GND, FB GND along with AGND to the VCC cap GND as per spec
Route IN+ (VR_VCCINT_INA_0V85) as diffrential Trace with IN- (VR_VCCINT_0V85)

AMD

AECG-DCCG
2100 Logic Drive
San Jose, CA 95124

PAGE:	28_VR3_VCCINT_0V85
PAGE NUMBER:	28 OF 33
DOC NO:	038-05204-01
DATE: Friday, March 28, 2025	REV: A4
SKU: BASE	

CONFIDENTIAL AND PROPRIETARY TO ADVANCED MICRO DEVICES INC.
© 2024 Advanced Micro Devices
This AMD Board schematic and design is the exclusive property of AMD, and is provided only to entities under a non-disclosure agreement with AMD for evaluation purposes. Further distribution or disclosure is strictly prohibited. Use of this schematic and design for any purpose other than evaluation requires a Board Technology License Agreement with AMD. AMD makes no representations or warranties of any kind regarding this schematic and design, including, not limited to, any implied warranty of merchantability or fitness for a particular purpose, and disclaims responsibility for any consequences resulting from use of the information included herein.

TITLE: EK-SCU35-PP-G

VR_VCCAUX_HDIO

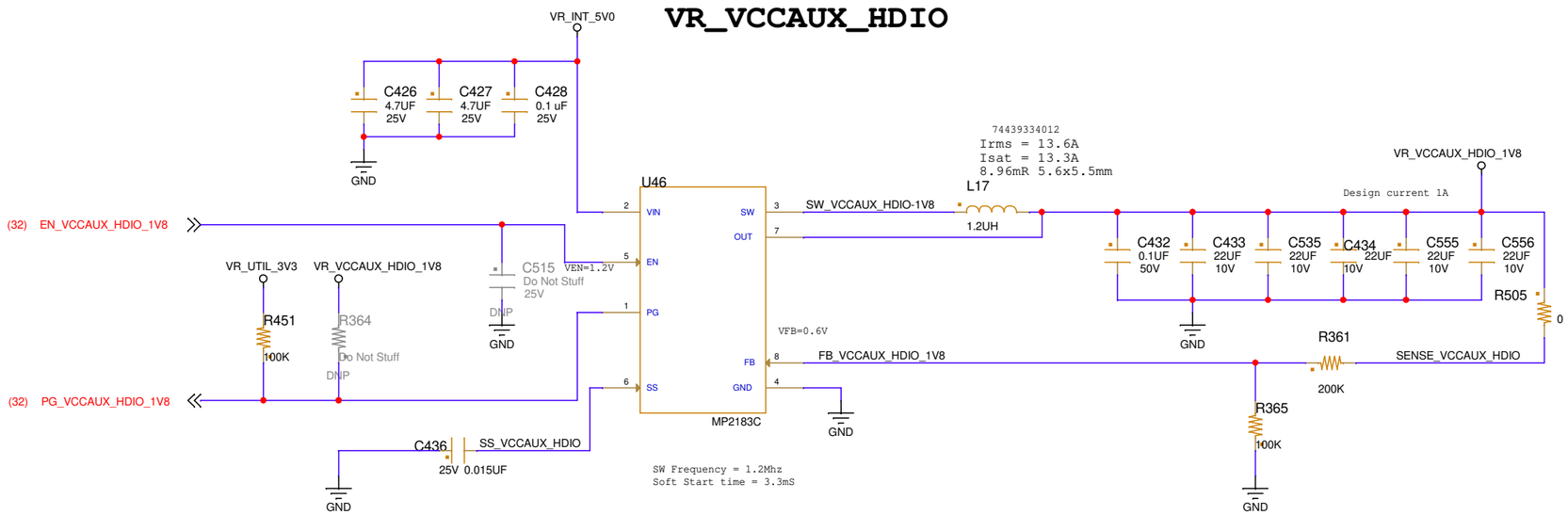

VR_VCCINT_IOBRAM

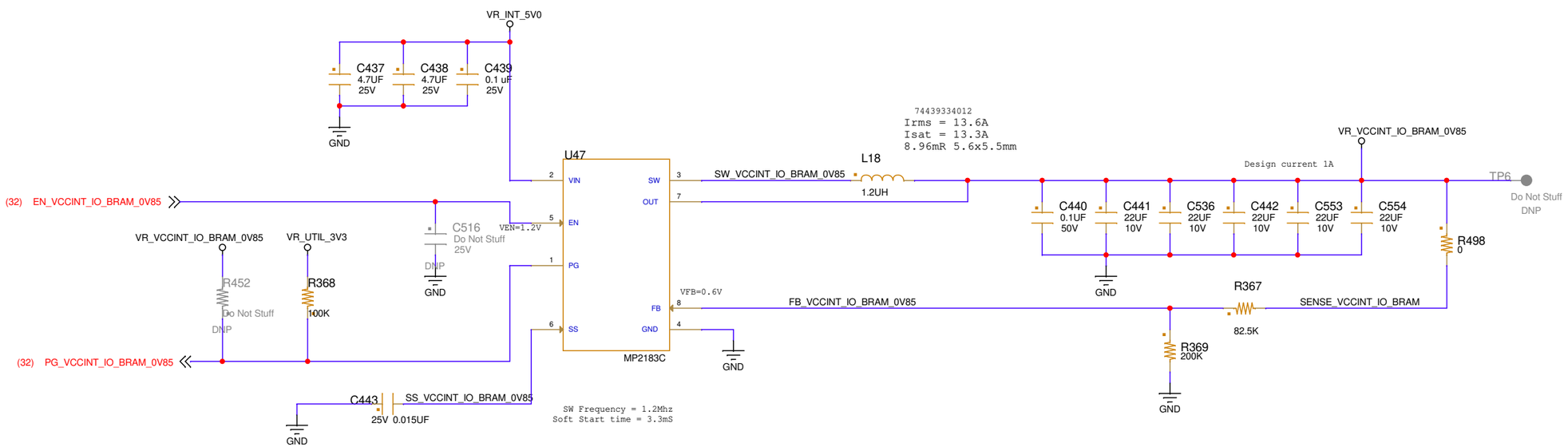

AECG-DCCG
2100 Logic Drive
San Jose, CA 95124

PAGE:	29_VR4_AUXHDIO_INTBRAM
PAGE NUMBER:	29 OF 33
DOC NO:	038-05204-01
DATE: Friday, March 28, 2025	REV: A4
SKU: BASE	

CONFIDENTIAL AND PROPRIETARY TO ADVANCED MICRO DEVICES INC.
© 2024 Advanced Micro Devices
This AMD Board schematic and design is the exclusive property of AMD, and is provided only to entities under a non-disclosure agreement with AMD for evaluation purposes. Further distribution or disclosure is strictly prohibited. Use of this schematic and design for any purpose other than evaluation requires a Board Technology License Agreement with AMD. AMD makes no representations or warranties of any kind regarding this schematic and design, including, not limited to, any implied warranty of merchantability or fitness for a particular purpose, and disclaims responsibility for any consequences resulting from use of the information included herein.

TITLE: EK-SCU35-PP-G

VR_UTIL_3V3

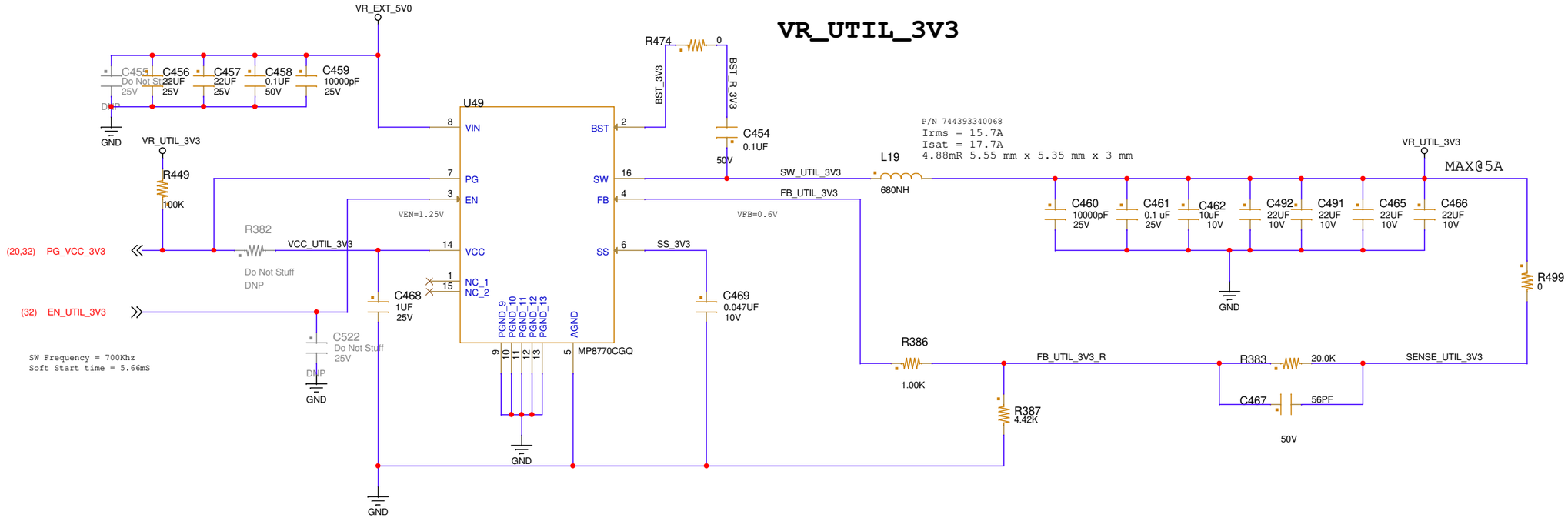

VR_VCCO_47

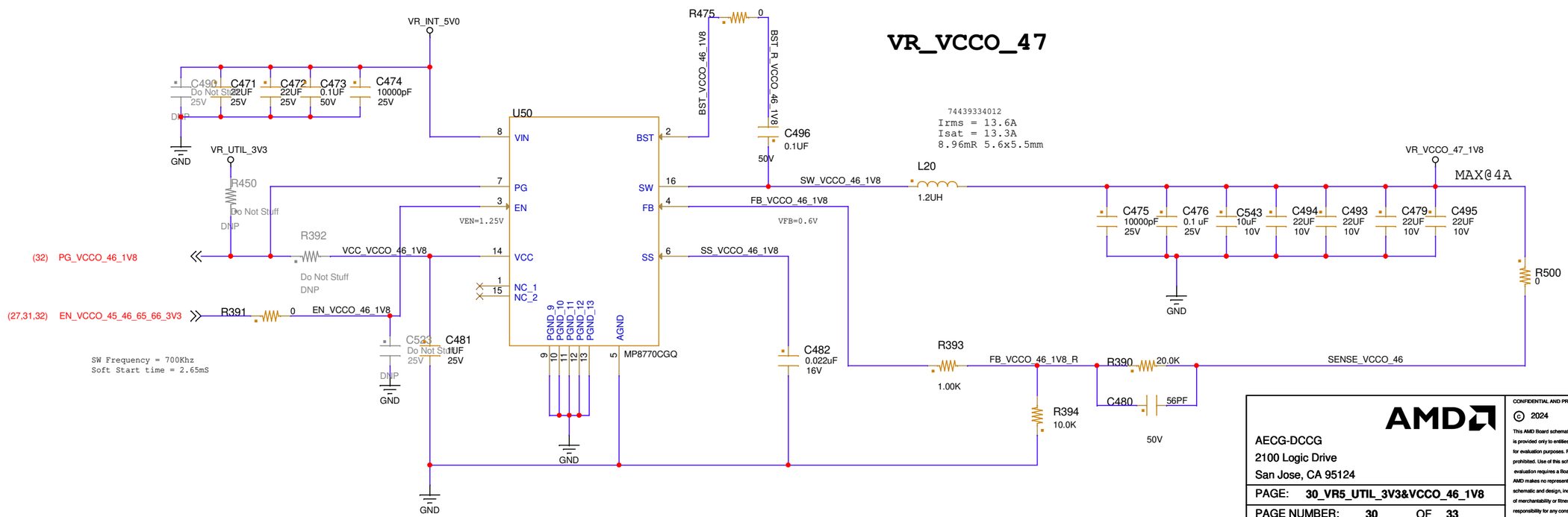

CAD Note: Please connect SS cap GND, FB GND along with AGND to the VCC cap GND as per spec

AMD

AECG-DCCG
2100 Logic Drive
San Jose, CA 95124

PAGE:	30_VR5_UTIL_3V3&VCCO_46_1V8
PAGE NUMBER:	30 OF 33
DOC NO:	038-05204-01
DATE: Friday, March 28, 2025	REV: A4
SKU: BASE	

CONFIDENTIAL AND PROPRIETARY TO ADVANCED MICRO DEVICES INC.

© 2024 Advanced Micro Devices

This AMD Board schematic and design is the exclusive property of AMD, and is provided only to entities under a non-disclosure agreement with AMD for evaluation purposes. Further distribution or disclosure is strictly prohibited. Use of this schematic and design for any purpose other than evaluation requires a Board Technology License Agreement with AMD. AMD makes no representations or warranties of any kind regarding this schematic and design, including, not limited to, any implied warranty of merchantability or fitness for a particular purpose, and disclaims responsibility for any consequences resulting from use of the information included herein.

TITLE: EK-SCU35-PP-G

VR_VCCO_65_66_67_68

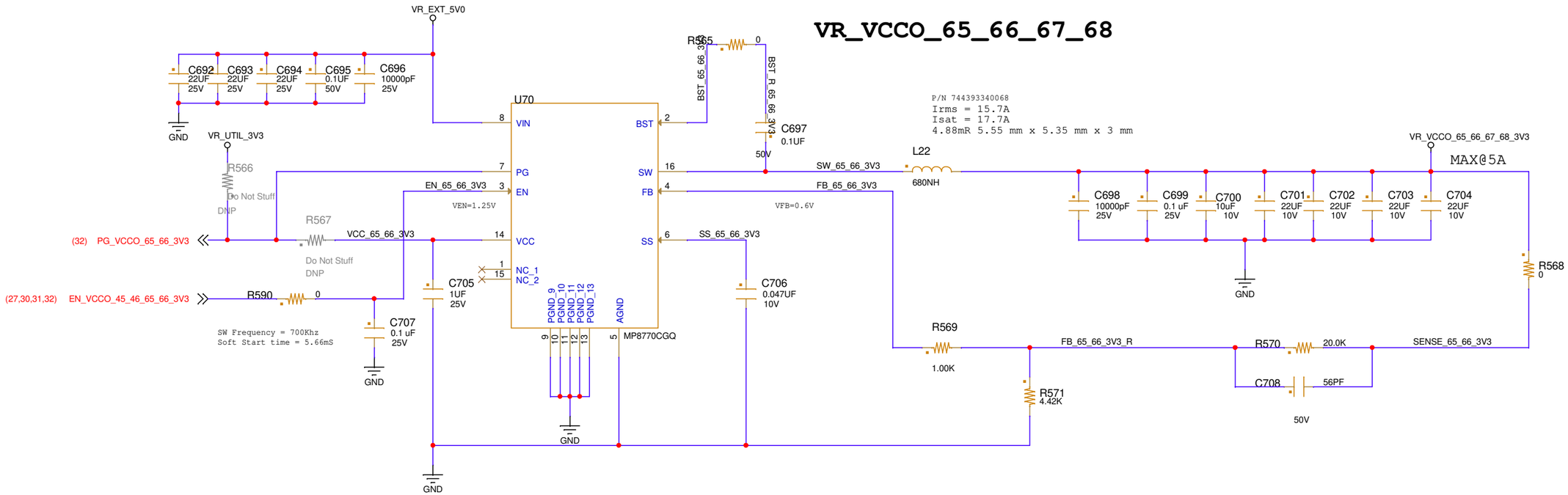

VR_VCCO_45_46_ADJ

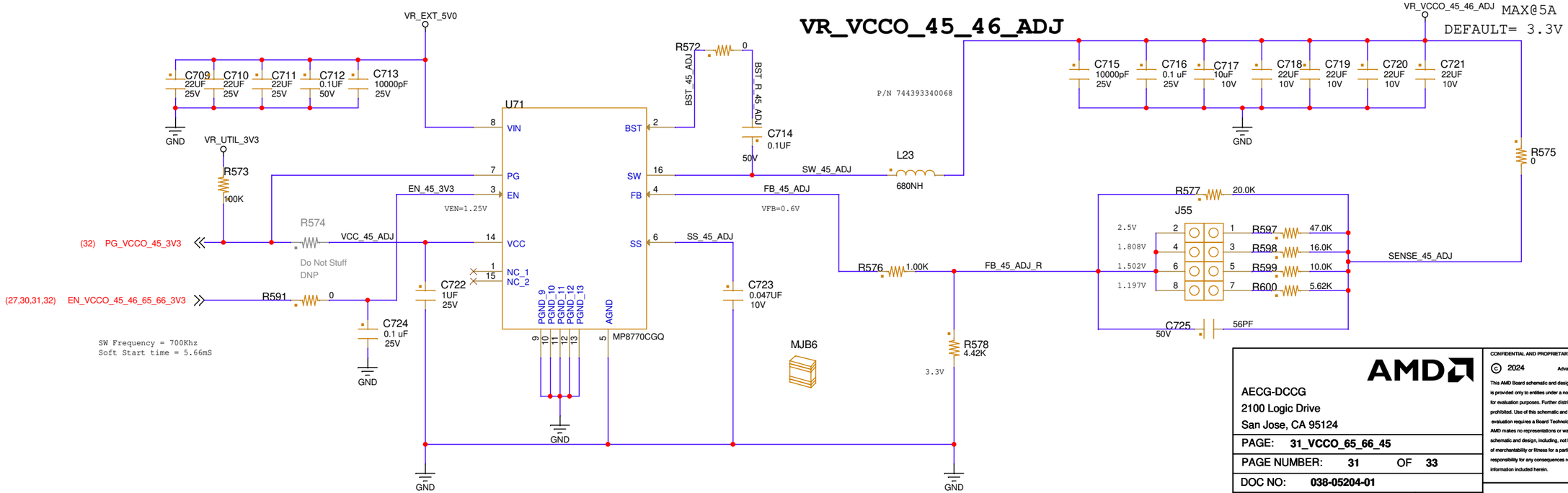

CAD Note: Please connect SS cap GND, FB GND along with AGND to the VCC cap GND as per spec

AMD

AECG-DCCG
2100 Logic Drive
San Jose, CA 95124

PAGE:	31_VCCO_65_66_45
PAGE NUMBER:	31 OF 33
DOC NO:	038-05204-01
DATE: Friday, March 28, 2025	REV: A4
SKU: BASE	

CONFIDENTIAL AND PROPRIETARY TO ADVANCED MICRO DEVICES INC.

© 2024 Advanced Micro Devices

This AMD Board schematic and design is the exclusive property of AMD, and is provided only to entities under a non-disclosure agreement with AMD for evaluation purposes. Further distribution or disclosure is strictly prohibited. Use of this schematic and design for any purpose other than evaluation requires a Board Technology License Agreement with AMD. AMD makes no representations or warranties of any kind regarding this schematic and design, including, not limited to, any implied warranty of merchantability or fitness for a particular purpose, and disclaims responsibility for any consequences resulting from use of the information included herein.

TITLE: EK-SCU35-PP-G

BOARD POWER ON SEQUENCING

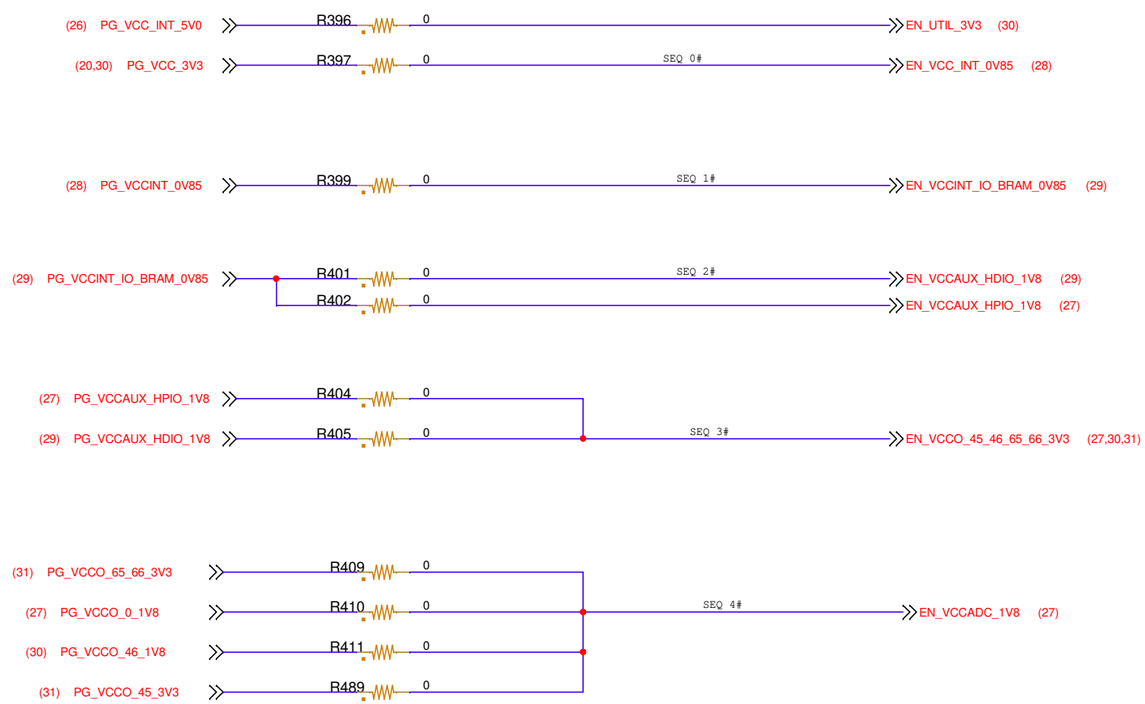

AECG-DCCG
2100 Logic Drive
San Jose, CA 95124

PAGE: **32_POWER SEQUENCING**

PAGE NUMBER: **32** OF **33**

DOC NO: **038-05204-01**

DATE: **Friday, March 28, 2025** REV: **A4**

SKU: **BASE**

CONFIDENTIAL AND PROPRIETARY TO ADVANCED MICRO DEVICES INC.

© 2024 Advanced Micro Devices

This AMD Board schematic and design is the exclusive property of AMD, and is provided only to entities under a non-disclosure agreement with AMD for evaluation purposes. Further distribution or disclosure is strictly prohibited. Use of this schematic and design for any purpose other than evaluation requires a Board Technology License Agreement with AMD. AMD makes no representations or warranties of any kind regarding this schematic and design, including, not limited to, any implied warranty of merchantability or fitness for a particular purpose, and disclaims responsibility for any consequences resulting from use of the information included herein.

TITLE: **EK-SCU35-PP-G**

FOUR RUBBER BUMPER

AECG-DCCG
2100 Logic Drive
San Jose, CA 95124

PAGE: **33_MECHANICAL**

PAGE NUMBER: **33** OF **33**

DOC NO: **038-05204-01**

DATE: **Friday, March 28, 2025** REV: **A4**

SKU: **BASE**

CONFIDENTIAL AND PROPRIETARY TO ADVANCED MICRO DEVICES INC.

© 2024 Advanced Micro Devices

This AMD Board schematic and design is the exclusive property of AMD, and is provided only to entities under a non-disclosure agreement with AMD for evaluation purposes. Further distribution or disclosure is strictly prohibited. Use of this schematic and design for any purpose other than evaluation requires a Board Technology License Agreement with AMD. AMD makes no representations or warranties of any kind regarding this schematic and design, including, not limited to, any implied warranty of merchantability or fitness for a particular purpose, and disclaims responsibility for any consequences resulting from use of the information included herein.

TITLE: **EK-SCU35-PP-G**