3Tanks_Level_ControlAuto [FC9]

3Tanks_Level_ControlAuto Properties							
General							
Name	3Tanks_Level_ControlAuto	**Number**	9	**Type**	FC	**Language**	LAD
Numbering	Automatic						
Information							
Title		**Author**		**Comment**		**Family**	
Version	0.1	**User-defined ID**					

Name	Data type	Default value	Comment
Input			
Output			
InOut			
Temp			
Constant			
Return			
3Tanks_Level_ControlAuto	Void		

Network 1: TANK 1: Next 3 Ranks control the levels of the 3 tanks

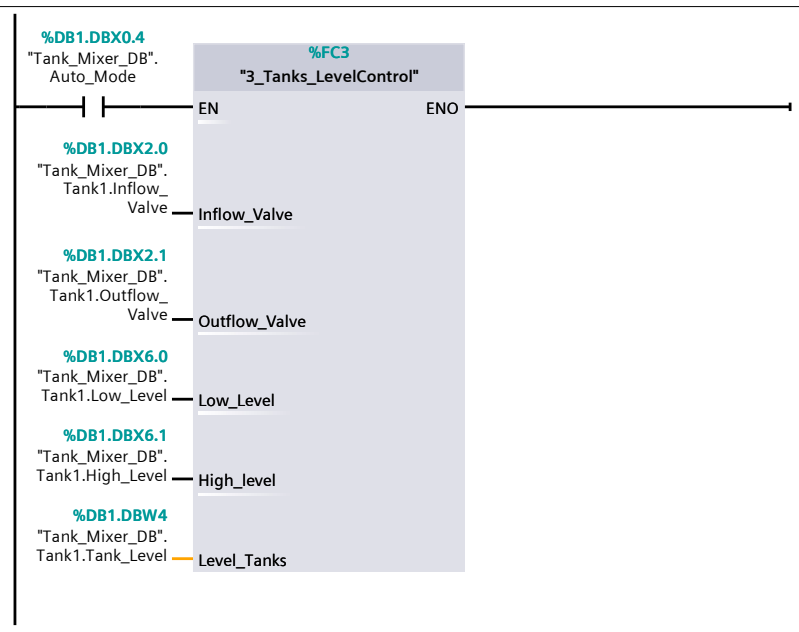

Network 2: TANK 2

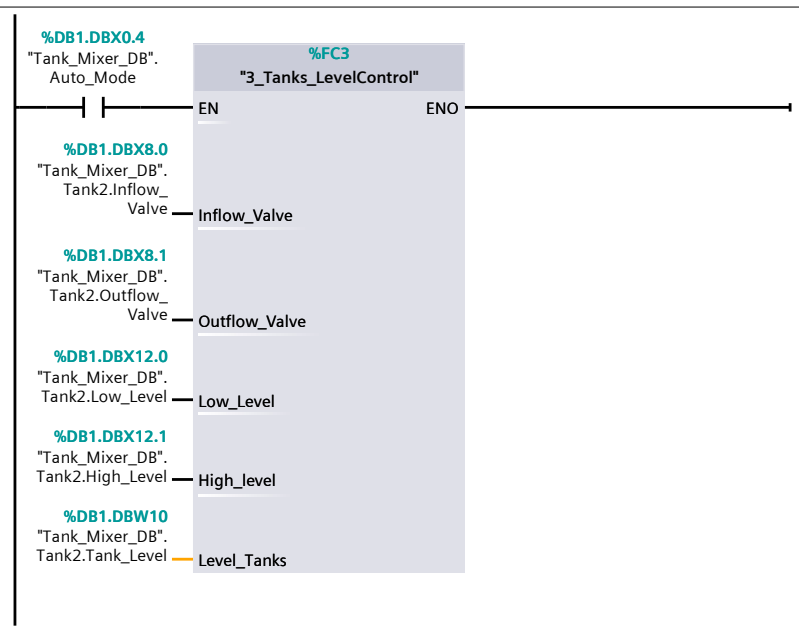

Network 3: TANK 3

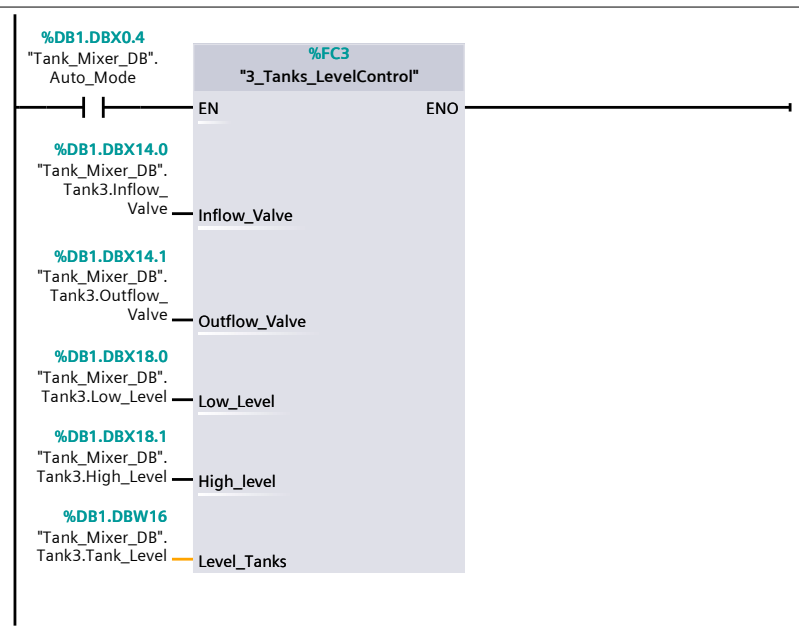
%DB1.DBX0.4
"Tank_Mixer_DB".
Auto_Mode
%FC3
"3_Tanks_LevelControl"
EN
ENO
%DB1.DBX14.0
"Tank_Mixer_DB".
Tank3.Inflow_
Valve
Inflow_Valve
%DB1.DBX14.1
"Tank_Mixer_DB".
Tank3.Outflow_
Valve
Outflow_Valve
%DB1.DBX18.0
"Tank_Mixer_DB".
Tank3.Low_Level
Low_Level
%DB1.DBX18.1
"Tank_Mixer_DB".
Tank3.High_Level
High_level
%DB1.DBW16
"Tank_Mixer_DB".
Tank3.Tank_Level
Level_Tanks