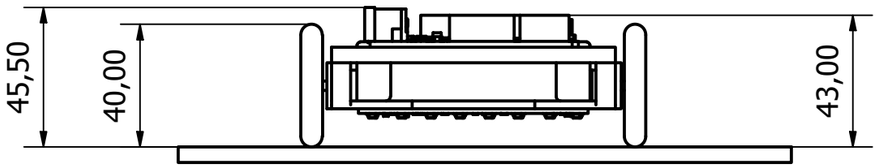

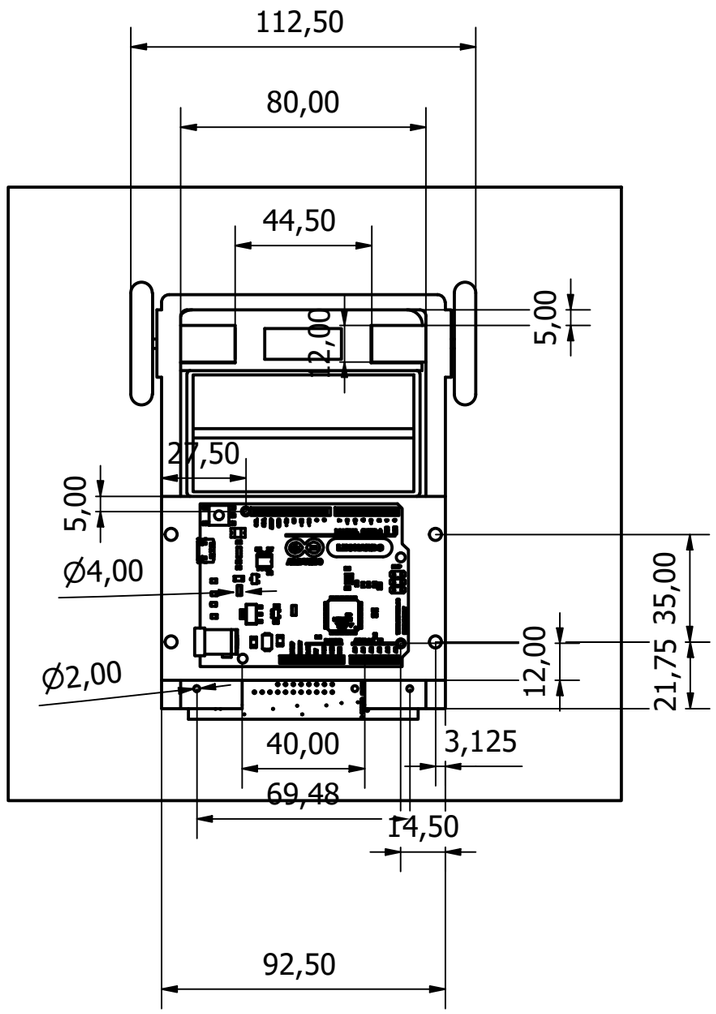

Designed by	Checked by	Approved by	Date		Date	
Robbe Malfroot					16/10/2022	

Hogent	Linefollower		
	Linefollower	Edition	Sheet 1 / 1