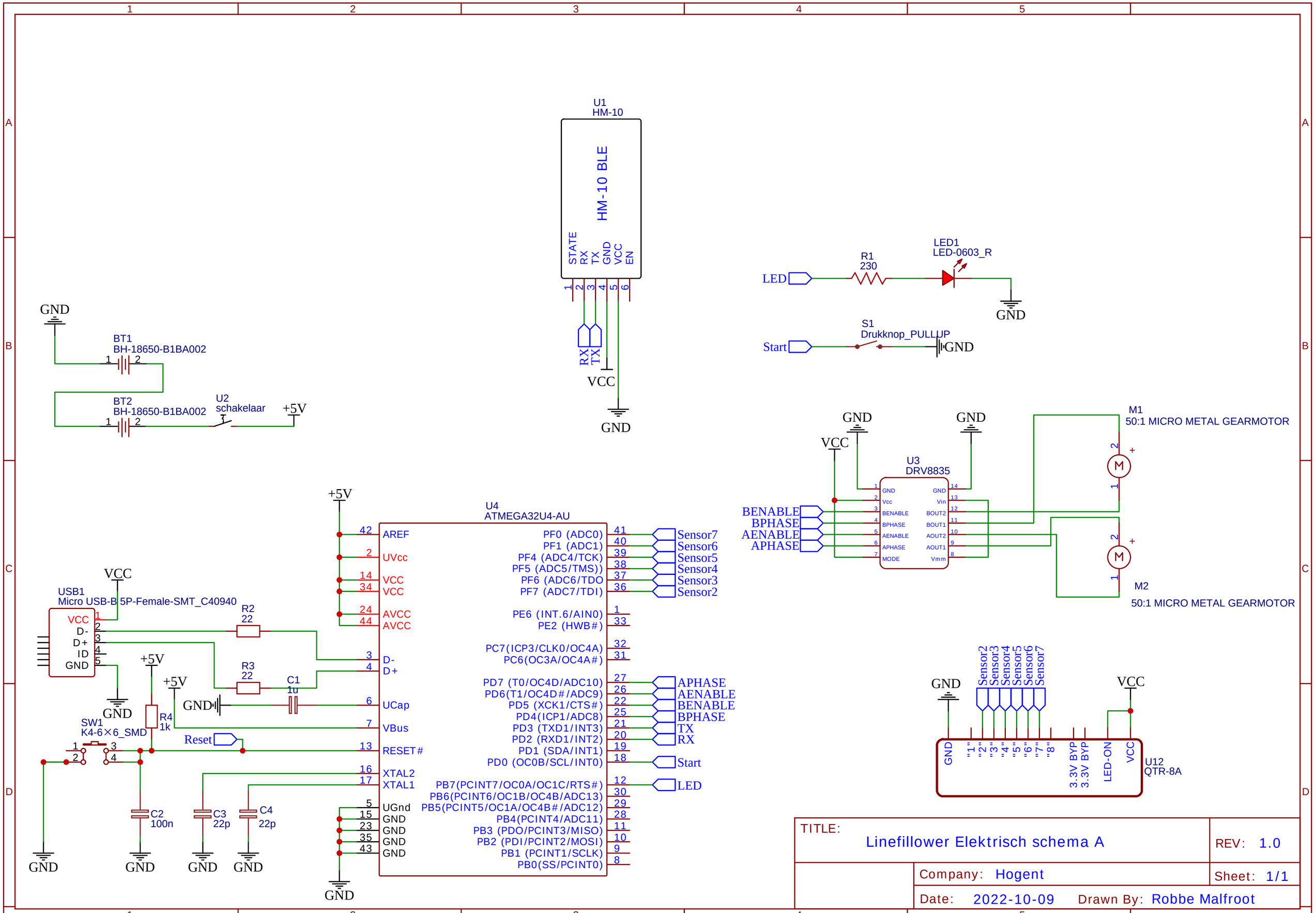
U1
HM-10
HM-10 BLE
STATE
RX
TX
GND
VCC
EN
RX
TX
VCC
GND
LED
R1
230
LED1
LED-0603_R
GND
Start
S1
Drukknop_PULLUP
GND
GND
BT1
BH-18650-B1BA002
BT2
BH-18650-B1BA002
U2
schakelaar
+5V
GND
VCC
U3
DRV8835
BENABLE
BPHASE
AENABLE
APHASE
M1
50:1 MICRO METAL GEARMOTOR
M2
50:1 MICRO METAL GEARMOTOR
+5V
U4
ATMEGA32U4-AU
AREF
UVcc
VCC
VCC
AVCC
AVCC
D-
D+
UCap
VBus
RESET#
XTAL2
XTAL1
UGnd
GND
GND
GND
GND
PF0 (ADC0)
PF1 (ADC1)
PF4 (ADC4/TCK)
PF5 (ADC5/TMS))
PF6 (ADC6/TDO
PF7 (ADC7/TDI)
PE6 (INT.6/AIN0)
PE2 (HWB#)
PC7(ICP3/CLK0/OC4A)
PC6(OC3A/OC4A#)
PD7 (T0/OC4D/ADC10)
PD6(T1/OC4D#/ADC9)
PD5 (XCK1/CTS#)
PD4(ICP1/ADC8)
PD3 (TXD1/INT3)
PD2 (RXD1/INT2)
PD1 (SDA/INT1)
PD0 (OC0B/SCL/INT0)
PB7(PCINT7/OC0A/OC1C/RTS#)
PB6(PCINT6/OC1B/OC4B/ADC13)
PB5(PCINT5/OC1A/OC4B#/ADC12)
PB4(PCINT4/ADC11)
PB3 (PDO/PCINT3/MISO)
PB2 (PDI/PCINT2/MOSI)
PB1 (PCINT1/SCLK)
PB0(SS/PCINT0)
Sensor7
Sensor6
Sensor5
Sensor4
Sensor3
Sensor2
APHASE
AENABLE
BENABLE
BPHASE
TX
RX
Start
LED
USB1
Micro USB-B 5P-Female-SMT_C40940
VCC
D-
D+
ID
GND
R2
22
R3
22
C1
1u
R4
1k
SW1
K4-6×6_SMD
Reset
C2
100n
C3
22p
C4
22p
GND
U12
QTR-8A
Sensor2
Sensor3
Sensor4
Sensor5
Sensor6
Sensor7
"1"
"2"
"3"
"4"
"5"
"6"
"7"
"8"
3.3V BYP
3.3V BYP
LED-ON
VCC
TITLE:
Linefillower Elektrisch schema A
REV: 1.0
Company: Hogent
Sheet: 1/1
Date: 2022-10-09
Drawn By: Robbe Malfroot