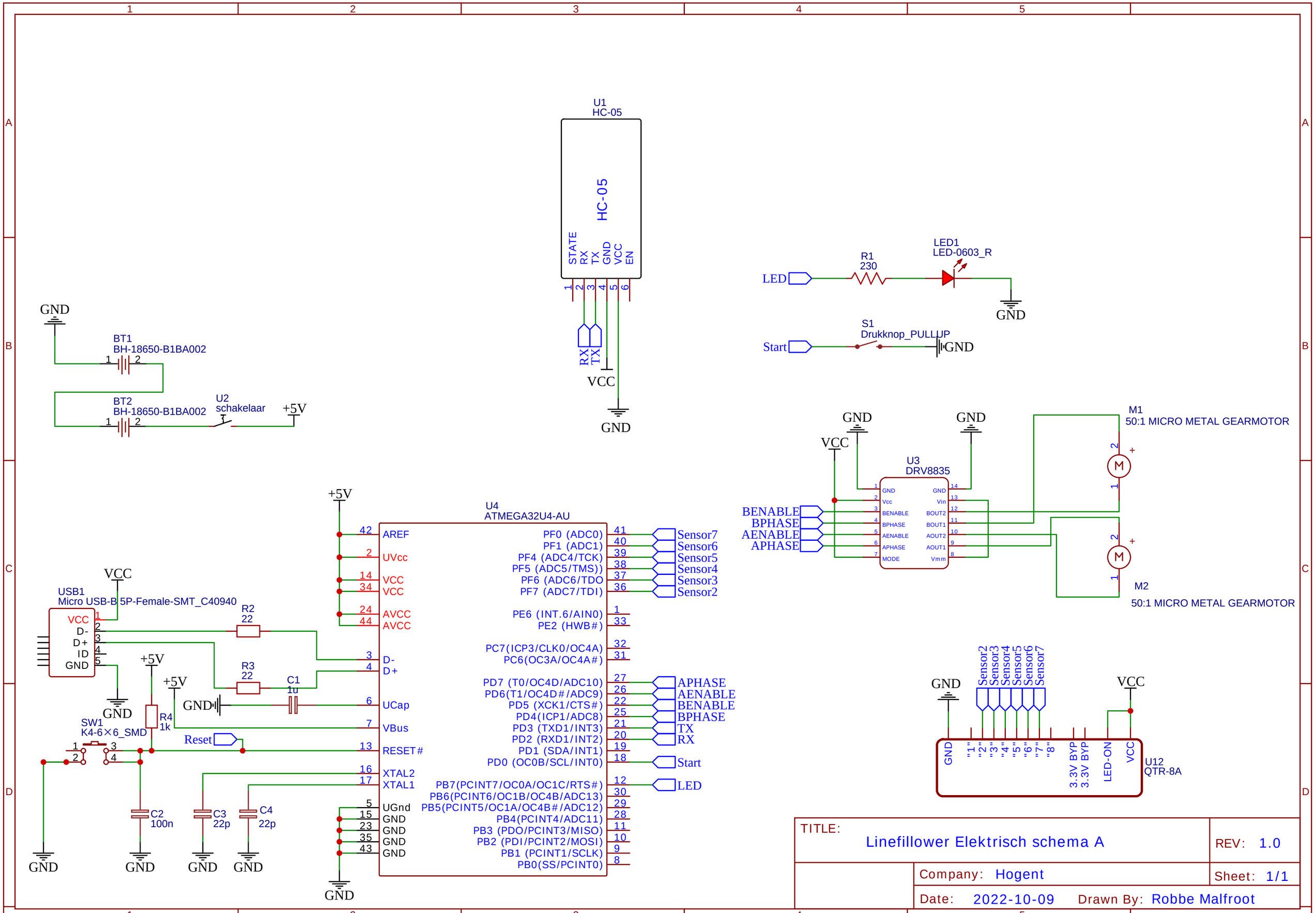

TITLE: Linefillower Elektrisch schema A		REV: 1.0
	Company: Hogent	Sheet: 1/1
	Date: 2022-10-09 Drawn By: Robbe Malfroot	