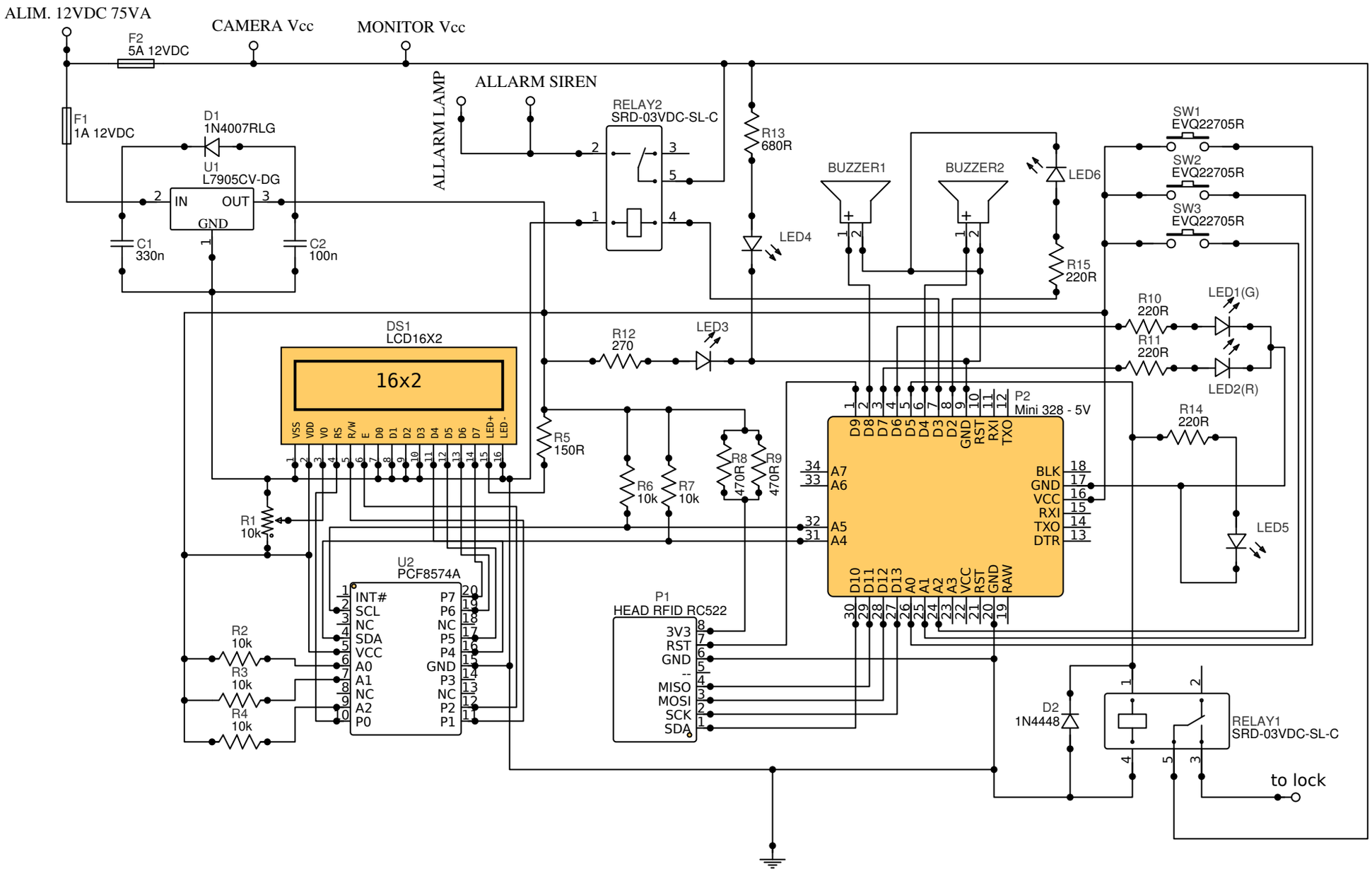

TITLE: Room Security System		REV: 1.0
EasyEDA	Company:	Sheet: 1/1
	Date: 2019-04-11 Drawn By: Gioele De Odorico	