US 20150193203A1

(19) United States

(12) Patent Application Publication

IYER et al.

(10) Pub. No.: US 2015/0193203 A1

(43) Pub. Date: Jul. 9, 2015

(54) **EFFICIENCY IN A FUSED FLOATING-POINT MULTIPLY-ADD UNIT**

(71) Applicant: **NVIDIA CORPORATION**, Santa Clara, CA (US)

(72) Inventors: **Srinivasan (Vasu) IYER**, Austin, TX (US); **David Conrad TANNENBAUM**, Austin, TX (US); **Stuart F. OBERMAN**, Sunnyvale, CA (US)

(73) Assignee: **NVIDIA CORPORATION**, Santa Clara, CA (US)

(21) Appl. No.: **14/149,647**

(22) Filed: **Jan. 7, 2014**

**Publication Classification**

(51) **Int. Cl.**

*G06F 7/544* (2006.01)

*G06F 7/50* (2006.01)

(52) **U.S. Cl.**

CPC ..... *G06F 7/5443* (2013.01); *G06F 7/50* (2013.01)

(57) **ABSTRACT**

A four cycle fused floating point multiply-add unit includes a radix 8 Booth encoder multiplier that is partitioned over two stages with the compression element allocated to the second stage. The unit further includes an improved shifter design. Processing logic analyzes the input operands, detects values of zero and one, and inhibits portions of the processing logic accordingly. When one of the multiplicand inputs has a value of zero or one, the required multiplication becomes trivial, and the unit inhibits the associated coding logic and data transfer to reduce power consumption. The unit then performs an add-only operation. When the addend input has a value of zero, the addition becomes trivial, and the unit inhibits the improved shifter and data transfer to further reduce power consumption. The unit then performs a multiply-only operation.

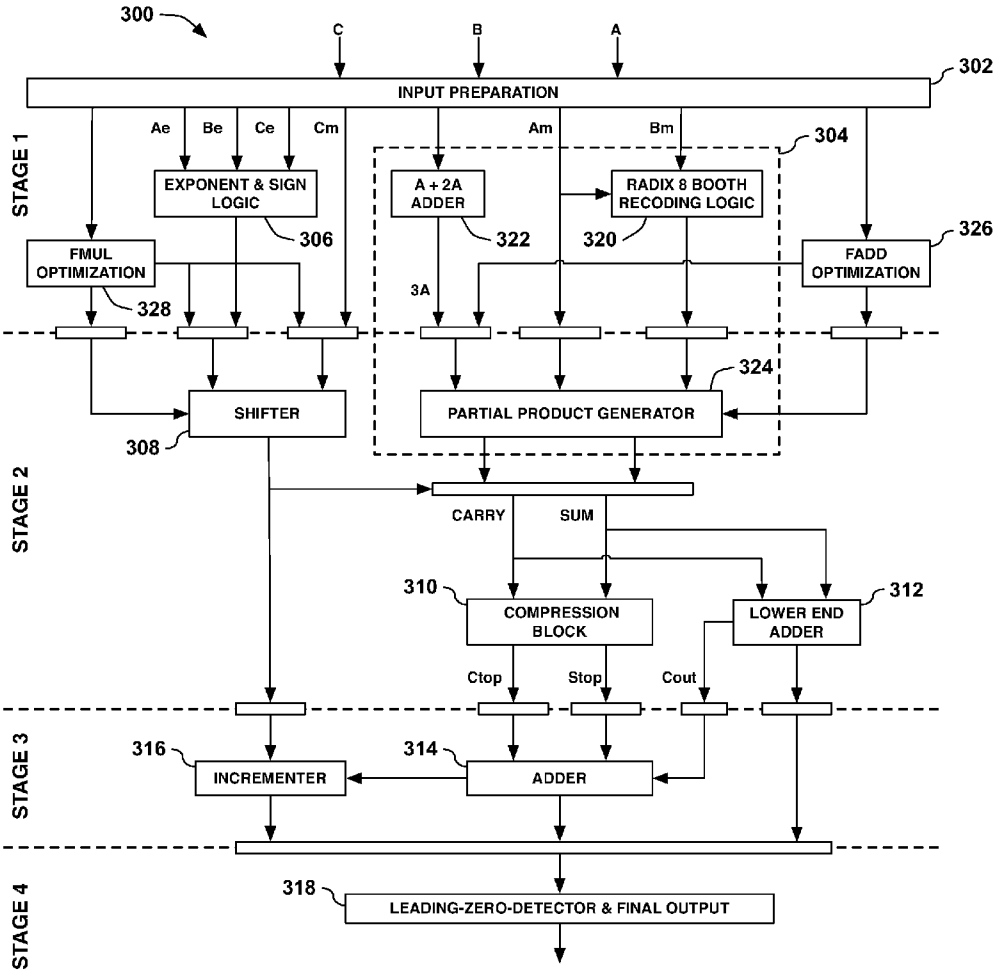

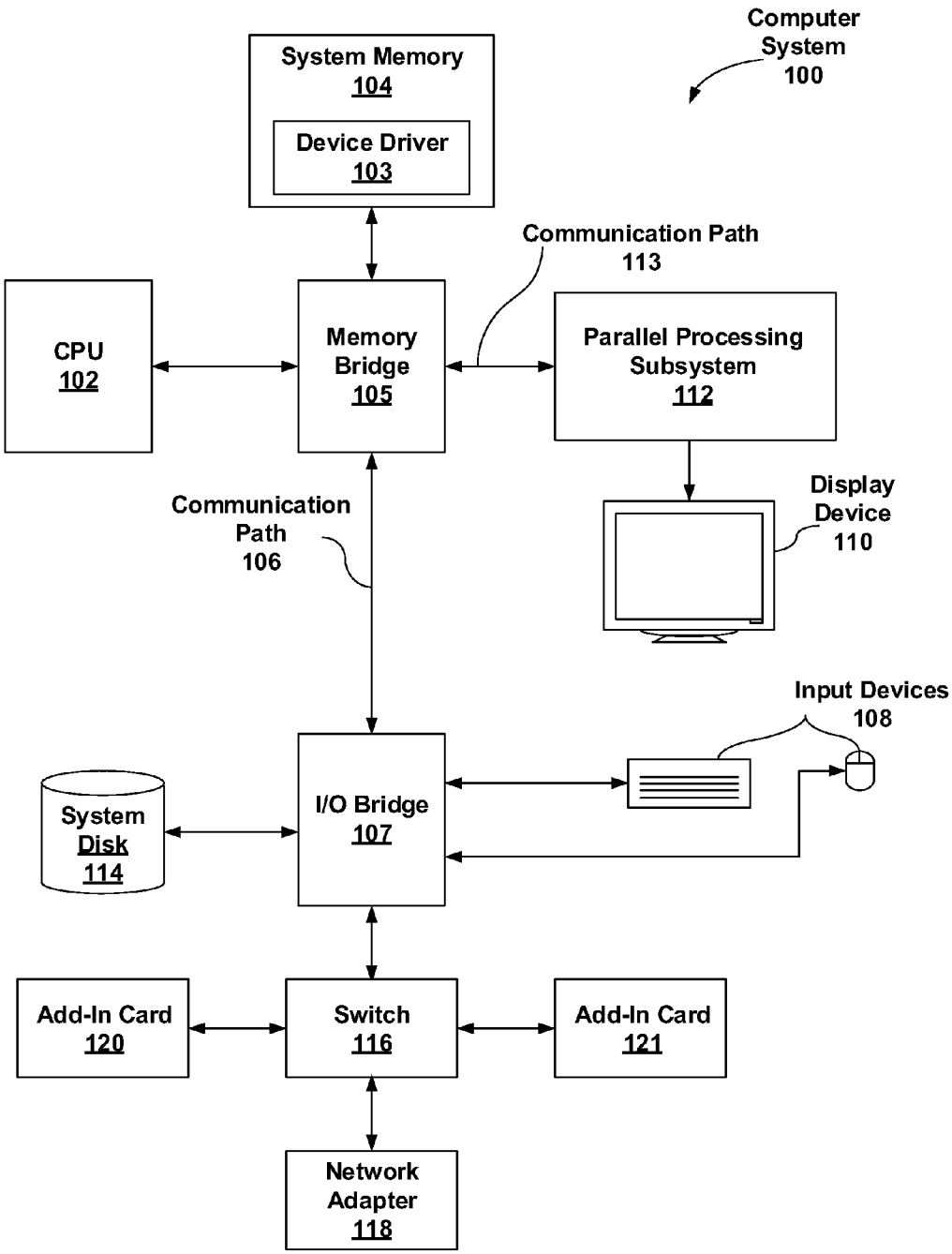
Computer System 100
System Memory 104
Device Driver 103
Communication Path 113
CPU 102
Memory Bridge 105
Parallel Processing Subsystem 112
Display Device 110
Communication Path 106
Input Devices 108
System Disk 114
I/O Bridge 107
Add-In Card 120
Switch 116
Add-In Card 121
Network Adapter 118

Figure 1

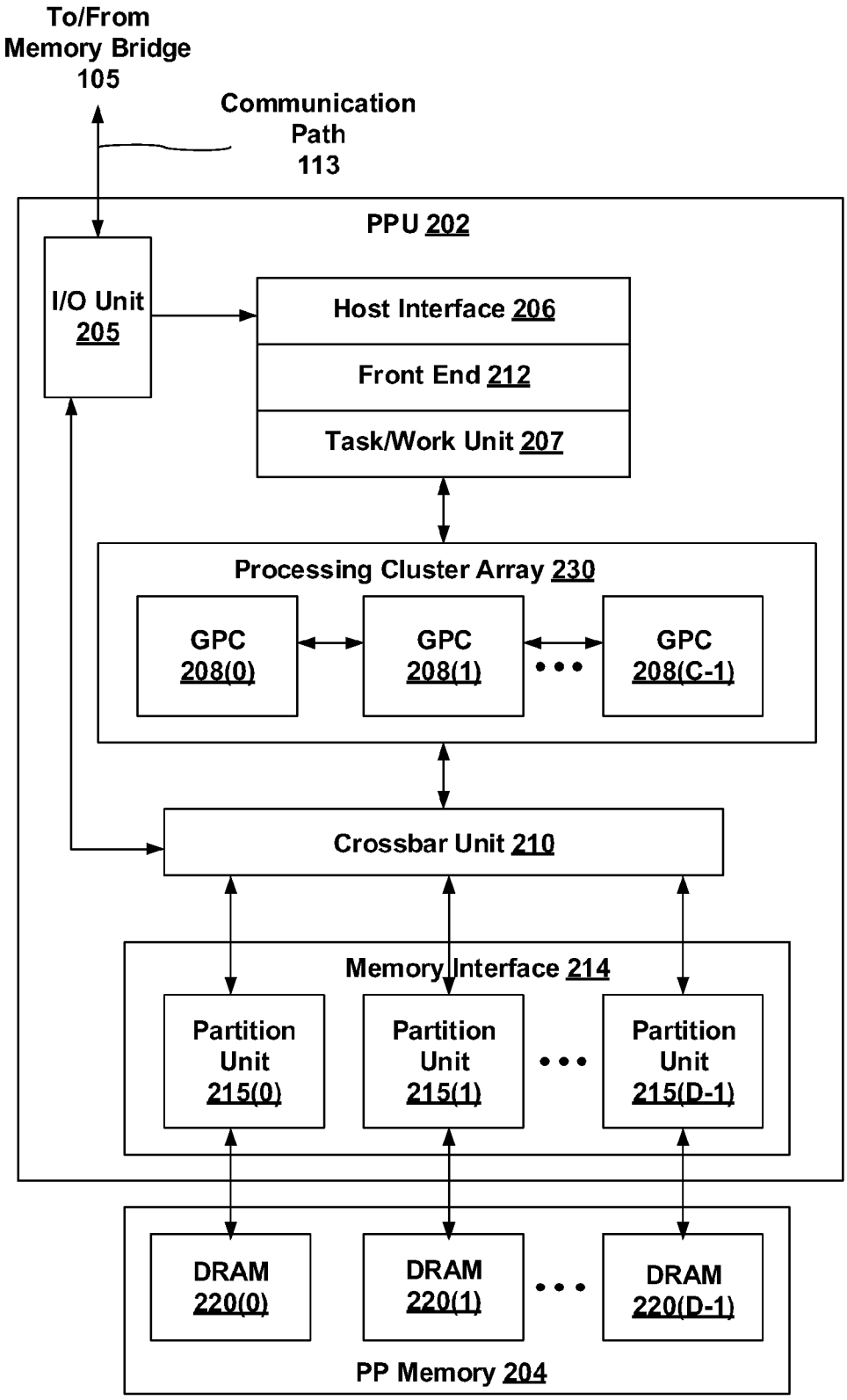
To/From
Memory Bridge
105
Communication
Path
113
PPU 202
I/O Unit
205
Host Interface 206
Front End 212
Task/Work Unit 207
Processing Cluster Array 230
GPC
208(0)
GPC
208(1)
GPC
208(C-1)
Crossbar Unit 210
Memory Interface 214
Partition
Unit
215(0)
Partition
Unit
215(1)
Partition
Unit
215(D-1)
DRAM
220(0)
DRAM
220(1)
DRAM
220(D-1)
PP Memory 204

Figure 2

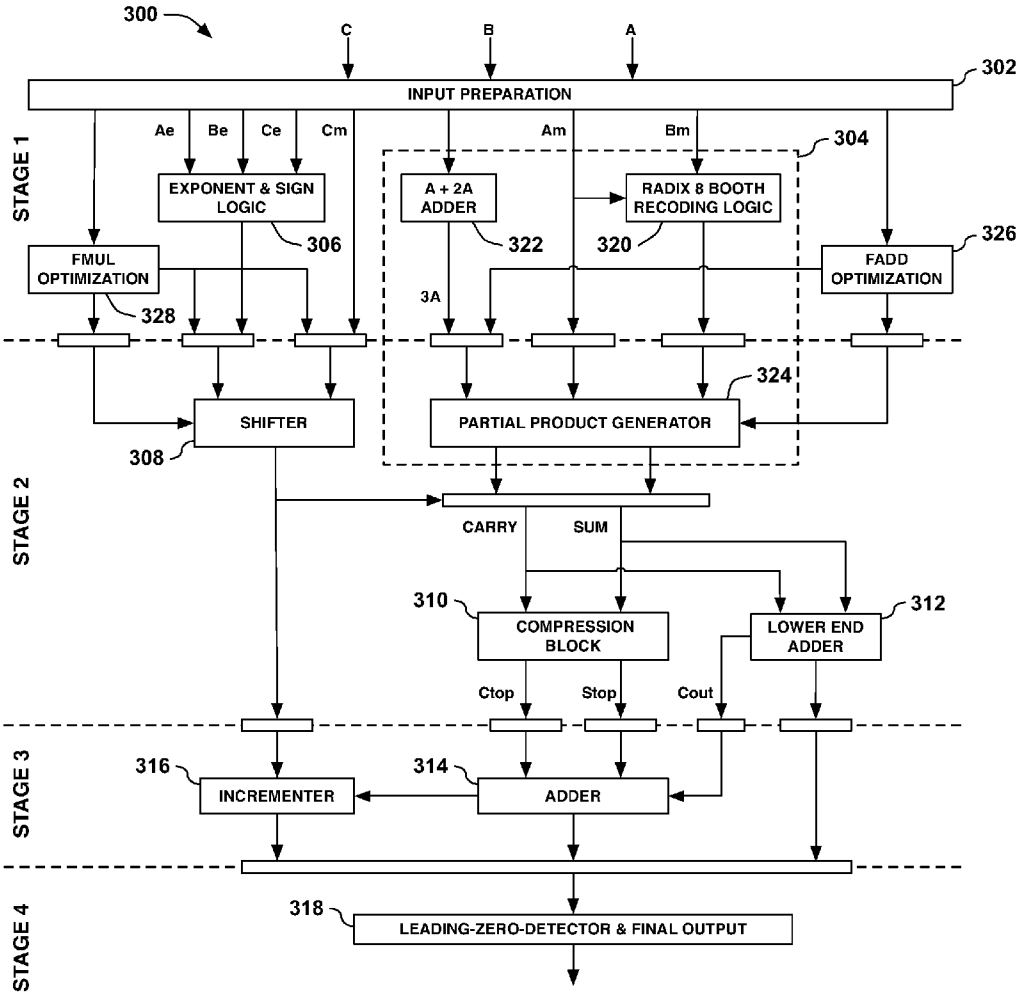
300
C
B
A
302
INPUT PREPARATION
Ae
Be
Ce
Cm
Am
Bm
304
STAGE 1
EXPONENT & SIGN LOGIC
A + 2A ADDER
RADIX 8 BOOTH RECODING LOGIC
306
322
320
326
FMUL OPTIMIZATION
FADD OPTIMIZATION
3A
328
324
SHIFTER
PARTIAL PRODUCT GENERATOR
308
STAGE 2
CARRY
SUM
310
312
COMPRESSION BLOCK
LOWER END ADDER
Ctop
Stop
Cout
STAGE 3
316
314
INCREMENTER
ADDER
STAGE 4
318
LEADING-ZERO-DETECTOR & FINAL OUTPUT

FIGURE 3

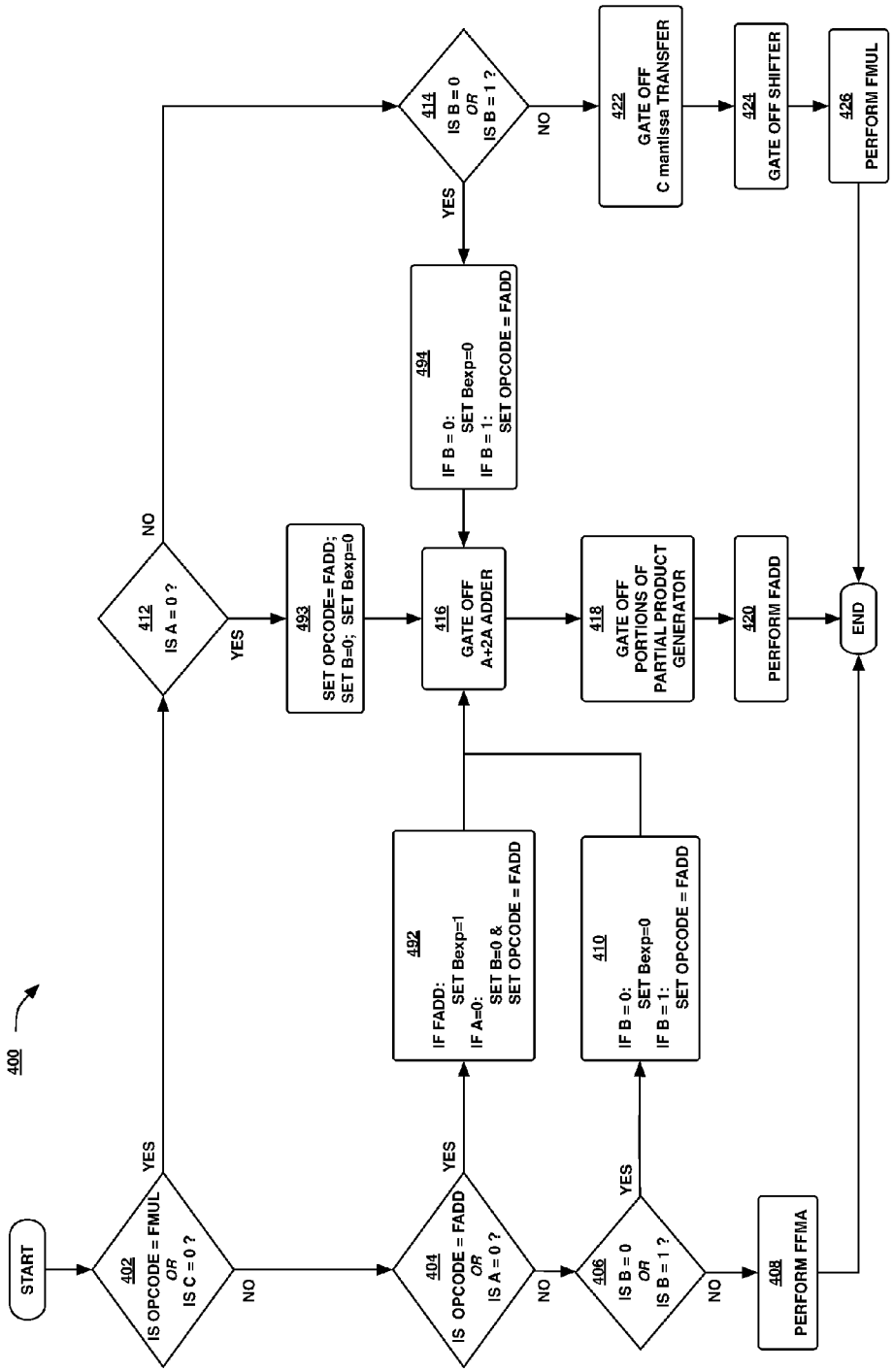
400
START
402
IS OPCODE = FMUL
OR
IS C = 0 ?
YES
NO
404
IS OPCODE = FADD
OR
IS A = 0 ?
YES
NO
406
IS B = 0
OR
IS B = 1 ?
YES
NO
408
PERFORM FFMA
412
IS A = 0 ?
YES
NO
414
IS B = 0
OR
IS B = 1 ?
YES
NO
422
GATE OFF
C mantissa TRANSFER
424
GATE OFF SHIFTER
426
PERFORM FMUL
493
SET OPCODE= FADD;
SET B=0; SET Bexp=0
494
IF B = 0:
SET Bexp=0
IF B = 1:
SET OPCODE = FADD
492
IF FADD:
SET Bexp=1
IF A=0:
SET B=0 &
SET OPCODE = FADD
410
IF B = 0:
SET Bexp=0
IF B = 1:
SET OPCODE = FADD
416
GATE OFF
A+2A ADDER
418
GATE OFF
PORTIONS OF
PARTIAL PRODUCT
GENERATOR
420
PERFORM FADD
END

Figure 4

# EFFICIENCY IN A FUSED FLOATING-POINT MULTIPLY-ADD UNIT

## BACKGROUND OF THE INVENTION

**[0001]** 1. Field of the Invention

**[0002]** Embodiments of the present invention relate generally to data processing and, more specifically, to improved efficiency in a fused floating point multiply-add unit.

**[0003]** 2. Description of the Related Art

**[0004]** In computer systems, in general, and in graphics processing units (GPUs), in particular, a number of arithmetic operations are typically required. The most common operation is termed a fused floating point multiply-add (FFMA) operation. The FFMA operation entails receiving three 32-bit operands, A, B, and C, and computing the value of (A*B+C). Because of the widespread use of the FFMA operation, the design of the FFMA element has significant impact on system performance, particularly with respect to power consumption and latency.

**[0005]** One design decision in the implementation of an FFMA element regards the number of clock cycles allocated to the operation. In a typical FFMA element implemented in four cycles, the first stage includes logic to receive the three input operands, extract the mantissas and exponents, and analyze the relative exponents. The multiplication of the mantissas of the A and B operands occurs in the second stage. The second stage further includes hardware to shift the C operand depending on the relative exponents. Stage three typically includes hardware to add the partial products and implement exponent and sign adjustment, while the final stage consists of leading-zero-detection, normalization, and rounding logic.

**[0006]** In typical computer implementations, the FFMA element is used for a large majority of math operations and may approach 90% usage. In a significant number of these instances, which may approach 30% or more of the total, the C operand is set to zero. In those cases the value of the output is simply the product (A*B). Nevertheless, the input preparation logic analyzes the relative exponent and loads the C operand into the shifter, and the shifter positions the C operand in the second stage regardless of the zero value of the C operand. In this manner, the element generates the final output (A*B+C), where C has a value of zero.

**[0007]** In a significant number of other instances, which may approach 30% or more of the total, the operation is a floating point add (FADD), which is achieved by setting B equal to one. In those cases, the value of the output is simply the sum (A+C). Nevertheless, the multiplier in stage two performs the multiplication, generating the partial products and performing compression. In this manner, the element generates the final output (A*B+C), where B has a value of one. This is equal to the quantity (A+C). As above, the element performs the full FFMA operation without regard to the simplicity of the final result.

**[0008]** As the foregoing illustrates, what is needed in the art is a more effective approach to performing multiply-only and add-only operations in computer systems.

## SUMMARY OF THE INVENTION

**[0009]** A system configured to perform an arithmetic operation, including an arithmetic element configured to receive a first operand, a second operand, and a third operand in a first stage of the arithmetic element, recode the first operand in the first stage of the arithmetic element to generate a first recoded operand, recode the second operand in the first stage of the arithmetic element to generate a second recoded operand, generate a first intermediate term that is three times the first operand, generate a first set of partial products in a second stage of the arithmetic element based on the recoded first operand, the recoded second operand, and the first intermediate term, combine the first set of partial products to generate a first product, and add the first product to the third operand to generate a first result.

**[0010]** One advantage of the disclosed approach is that a substantial reduction in area may be realized along with reduced power usage when performing add-only operations. Further, the improvement of the shifter design allows significant reduction in dynamic power consumption when performing multiply-only operations.

## BRIEF DESCRIPTION OF THE DRAWINGS

**[0011]** So that the manner in which the above recited features of the present invention can be understood in detail, a more particular description of the invention, briefly summarized above, may be had by reference to embodiments, some of which are illustrated in the appended drawings. It is to be noted, however, that the appended drawings illustrate only typical embodiments of this invention and are therefore not to be considered limiting of its scope, for the invention may admit to other equally effective embodiments.

**[0012]** FIG. **1** is a block diagram illustrating a computer system configured to implement one or more aspects of the present invention;

**[0013]** FIG. **2** is a block diagram of a parallel processing unit included in the parallel processing subsystem of FIG. **1**, according to one embodiment of the present invention;

**[0014]** FIG. **3** is a conceptual diagram of a subsystem configured to support a four cycle fused floating point multiply-add operation, according to one embodiment of the present invention; and

**[0015]** FIG. **4** is a flow diagram of method steps for performing math operations in a segmented FFMA unit, according to one embodiment of the present invention.

## DETAILED DESCRIPTION

**[0016]** In the following description, numerous specific details are set forth to provide a more thorough understanding of the present invention. However, it will be apparent to one of skill in the art that the present invention may be practiced without one or more of these specific details.

### System Overview

**[0017]** FIG. **1** is a block diagram illustrating a computer system **100** configured to implement one or more aspects of the present invention. As shown, computer system **100** includes, without limitation, a central processing unit (CPU) **102** and a system memory **104** coupled to a parallel processing subsystem **112** via a memory bridge **105** and a communication path **113**. Memory bridge **105** is further coupled to an I/O (input/output) bridge **107** via a communication path **106**, and I/O bridge **107** is, in turn, coupled to a switch **116**.

**[0018]** In operation, I/O bridge **107** is configured to receive user input information from input devices **108**, such as a keyboard or a mouse, and forward the input information to CPU **102** for processing via communication path **106** and memory bridge **105**. Switch **116** is configured to provide connections between I/O bridge **107** and other components of

the computer system **100**, such as a network adapter **118** and various add-in cards **120** and **121**.

**[0019]** As also shown, I/O bridge **107** is coupled to a system disk **114** that may be configured to store content and applications and data for use by CPU **102** and parallel processing subsystem **112**. As a general matter, system disk **114** provides non-volatile storage for applications and data and may include fixed or removable hard disk drives, flash memory devices, and CD-ROM (compact disc read-only-memory), DVD-ROM (digital versatile disc-ROM), Blu-ray, HD-DVD (high definition DVD), or other magnetic, optical, or solid state storage devices. Finally, although not explicitly shown, other components, such as universal serial bus or other port connections, compact disc drives, digital versatile disc drives, film recording devices, and the like, may be connected to I/O bridge **107** as well.

**[0020]** In various embodiments, memory bridge **105** may be a Northbridge chip, and I/O bridge **107** may be a Southbridge chip. In addition, communication paths **106** and **113**, as well as other communication paths within computer system **100**, may be implemented using any technically suitable protocols, including, without limitation, AGP (Accelerated Graphics Port), HyperTransport, or any other bus or point-to-point communication protocol known in the art.

**[0021]** In some embodiments, parallel processing subsystem **112** comprises a graphics subsystem that delivers pixels to a display device **110** that may be any conventional cathode ray tube, liquid crystal display, light-emitting diode display, or the like. In such embodiments, the parallel processing subsystem **112** incorporates circuitry optimized for graphics and video processing, including, for example, video output circuitry. As described in greater detail below in FIG. **2**, such circuitry may be incorporated across one or more parallel processing units (PPUs) included within parallel processing subsystem **112**. In other embodiments, the parallel processing subsystem **112** incorporates circuitry optimized for general purpose and/or compute processing. Again, such circuitry may be incorporated across one or more PPUs included within parallel processing subsystem **112** that are configured to perform such general purpose and/or compute operations. In yet other embodiments, the one or more PPUs included within parallel processing subsystem **112** may be configured to perform graphics processing, general purpose processing, and compute processing operations. System memory **104** includes at least one device driver **103** configured to manage the processing operations of the one or more PPUs within parallel processing subsystem **112**.

**[0022]** In various embodiments, parallel processing subsystem **112** may be integrated with one or more of the other elements of FIG. **1** to form a single system. For example, parallel processing subsystem **112** may be integrated with CPU **102** and other connection circuitry on a single chip to form a system on chip (SoC).

**[0023]** It will be appreciated that the system shown herein is illustrative and that variations and modifications are possible. The connection topology, including the number and arrangement of bridges, the number of CPUs **102**, and the number of parallel processing subsystems **112**, may be modified as desired. For example, in some embodiments, system memory **104** could be connected to CPU **102** directly rather than through memory bridge **105**, and other devices would communicate with system memory **104** via memory bridge **105** and CPU **102**. In other alternative topologies, parallel processing subsystem **112** may be connected to I/O bridge **107** or directly to CPU **102**, rather than to memory bridge **105**. In still other embodiments, I/O bridge **107** and memory bridge **105** may be integrated into a single chip instead of existing as one or more discrete devices. Lastly, in certain embodiments, one or more components shown in FIG. **1** may not be present. For example, switch **116** could be eliminated, and network adapter **118** and add-in cards **120**, **121** would connect directly to I/O bridge **107**.

**[0024]** FIG. **2** is a block diagram of a parallel processing unit (PPU) **202** included in the parallel processing subsystem **112** of FIG. **1**, according to one embodiment of the present invention. Although FIG. **2** depicts one PPU **202**, as indicated above, parallel processing subsystem **112** may include any number of PPUs **202**. As shown, PPU **202** is coupled to a local parallel processing (PP) memory **204**. PPU **202** and PP memory **204** may be implemented using one or more integrated circuit devices, such as programmable processors, application specific integrated circuits (ASICs), or memory devices, or in any other technically feasible fashion.

**[0025]** In some embodiments, PPU **202** comprises a graphics processing unit (GPU) that may be configured to implement a graphics rendering pipeline to perform various operations related to generating pixel data based on graphics data supplied by CPU **102** and/or system memory **104**. When processing graphics data, PP memory **204** can be used as graphics memory that stores one or more conventional frame buffers and, if needed, one or more other render targets as well. Among other things, PP memory **204** may be used to store and update pixel data and deliver final pixel data or display frames to display device **110** for display. In some embodiments, PPU **202** also may be configured for general-purpose processing and compute operations.

**[0026]** In operation, CPU **102** is the master processor of computer system **100**, controlling and coordinating operations of other system components. In particular, CPU **102** issues commands that control the operation of PPU **202**. In some embodiments, CPU **102** writes a stream of commands for PPU **202** to a data structure (not explicitly shown in either FIG. **1** or FIG. **2**) that may be located in system memory **104**, PP memory **204**, or another storage location accessible to both CPU **102** and PPU **202**. A pointer to the data structure is written to a pushbuffer to initiate processing of the stream of commands in the data structure. The PPU **202** reads command streams from the pushbuffer and then executes commands asynchronously relative to the operation of CPU **102**. In embodiments where multiple pushbuffers are generated, execution priorities may be specified for each pushbuffer by an application program via device driver **103** to control scheduling of the different pushbuffers.

**[0027]** As also shown, PPU **202** includes an I/O (input/output) unit **205** that communicates with the rest of computer system **100** via the communication path **113** and memory bridge **105**. I/O unit **205** generates packets (or other signals) for transmission on communication path **113** and also receives all incoming packets (or other signals) from communication path **113**, directing the incoming packets to appropriate components of PPU **202**. For example, commands related to processing tasks may be directed to a host interface **206**, while commands related to memory operations (e.g., reading from or writing to PP memory **204**) may be directed to a crossbar unit **210**. Host interface **206** reads each pushbuffer and transmits the command stream stored in the pushbuffer to a front end **212**.

**[0028]** As mentioned above in conjunction with FIG. **1**, the connection of PPU **202** to the rest of computer system **100** may be varied. In some embodiments, parallel processing subsystem **112**, which includes at least one PPU **202**, is implemented as an add-in card that can be inserted into an expansion slot of computer system **100**. In other embodiments, PPU **202** can be integrated on a single chip with a bus bridge, such as memory bridge **105** or I/O bridge **107**. Again, in still other embodiments, some or all of the elements of PPU **202** may be included along with CPU **102** in a single integrated circuit or system on chip (SoC).

**[0029]** In operation, front end **212** transmits processing tasks received from host interface **206** to a work distribution unit (not shown) within task/work unit **207**. The work distribution unit receives pointers to processing tasks that are encoded as task metadata (TMD) and stored in memory. The pointers to TMDs are included in a command stream that is stored as a pushbuffer and received by the front end unit **212** from the host interface **206**. Processing tasks that may be encoded as TMDs include indices associated with the data to be processed as well as state parameters and commands that define how the data is to be processed. For example, the state parameters and commands could define the program to be executed on the data. The task/work unit **207** receives tasks from the front end **212** and ensures that GPCs **208** are configured to a valid state before the processing task specified by each one of the TMDs is initiated. A priority may be specified for each TMD that is used to schedule the execution of the processing task. Processing tasks also may be received from the processing cluster array **230**. Optionally, the TMD may include a parameter that controls whether the TMD is added to the head or the tail of a list of processing tasks (or to a list of pointers to the processing tasks), thereby providing another level of control over execution priority.

**[0030]** PPU **202** advantageously implements a highly parallel processing architecture based on a processing cluster array **230** that includes a set of C general processing clusters (GPCs) **208**, where C **1**. Each GPC **208** is capable of executing a large number (e.g., hundreds or thousands) of threads concurrently, where each thread is an instance of a program. In various applications, different GPCs **208** may be allocated for processing different types of programs or for performing different types of computations. The allocation of GPCs **208** may vary depending on the workload arising for each type of program or computation.

**[0031]** Memory interface **214** includes a set of D of partition units **215**, where D≥1. Each partition unit **215** is coupled to one or more dynamic random access memories (DRAMs) **220** residing within PPM memory **204**. In one embodiment, the number of partition units **215** equals the number of DRAMs **220**, and each partition unit **215** is coupled to a different DRAM **220**. In other embodiments, the number of partition units **215** may be different than the number of DRAMs **220**. Persons of ordinary skill in the art will appreciate that a DRAM **220** may be replaced with any other technically suitable storage device. In operation, various render targets, such as texture maps and frame buffers, may be stored across DRAMs **220**, allowing partition units **215** to write portions of each render target in parallel to efficiently use the available bandwidth of PP memory **204**.

**[0032]** A given GPC **208** may process data to be written to any of the DRAMs **220** within PP memory **204**. Crossbar unit **210** is configured to route the output of each GPC **208** to the input of any partition unit **215** or to any other GPC **208** for further processing. GPCs **208** communicate with memory interface **214** via crossbar unit **210** to read from or write to various DRAMs **220**. In one embodiment, crossbar unit **210** has a connection to I/O unit **205**, in addition to a connection to PP memory **204** via memory interface **214**, thereby enabling the processing cores within the different GPCs **208** to communicate with system memory **104** or other memory not local to PPU **202**. In the embodiment of FIG. **2**, crossbar unit **210** is directly connected with I/O unit **205**. In various embodiments, crossbar unit **210** may use virtual channels to separate traffic streams between the GPCs **208** and partition units **215**.

**[0033]** Again, GPCs **208** can be programmed to execute processing tasks relating to a wide variety of applications, including, without limitation, linear and nonlinear data transforms, filtering of video and/or audio data, modeling operations (e.g., applying laws of physics to determine position, velocity and other attributes of objects), image rendering operations (e.g., tessellation shader, vertex shader, geometry shader, and/or pixel/fragment shader programs), general compute operations, etc. In operation, PPU **202** is configured to transfer data from system memory **104** and/or PP memory **204** to one or more on-chip memory units, process the data, and write result data back to system memory **104** and/or PP memory **204**. The result data may then be accessed by other system components, including CPU **102**, another PPU **202** within parallel processing subsystem **112**, or another parallel processing subsystem **112** within computer system **100**.

**[0034]** As noted above, any number of PPUs **202** may be included in a parallel processing subsystem **112**. For example, multiple PPUs **202** may be provided on a single add-in card, or multiple add-in cards may be connected to communication path **113**, or one or more of PPUs **202** may be integrated into a bridge chip. PPUs **202** in a multi-PPU system may be identical to or different from one another. For example, different PPUs **202** might have different numbers of processing cores and/or different amounts of PP memory **204**. In implementations where multiple PPUs **202** are present, those PPUs may be operated in parallel to process data at a higher throughput than is possible with a single PPU **202**. Systems incorporating one or more PPUs **202** may be implemented in a variety of configurations and form factors, including, without limitation, desktops, laptops, handheld personal computers or other handheld devices, servers, workstations, game consoles, embedded systems, and the like.

## Improved Efficiency in a Fused Floating Point Multiply-Add Unit

**[0035]** FIG. **3** is a conceptual diagram of a subsystem **300** configured to support a four cycle fused floating point multiply-add operation, according to one embodiment of the present invention. Subsystem **300** may be included within any portion of computer system **100** of FIG. **1**. For example, CPU **102** of FIG. **1** or PPU **202** of FIG. **2** may include one or more instances of subsystem **300**. Subsystem **300** may be incorporated into any type of computer device, including server machines, desktop machines, laptop computers, mobile devices, handheld devices, and so forth.

**[0036]** As shown, subsystem **300** includes stage **1** through stage **4**. Stage **1** includes input preparation **302**, exponent and sign logic **306**, FMUL optimization **328**, and FADD optimizations **326**. Multiplier **304** is distributed across stage **1** and stage **2** and includes radix 8 Booth recoding logic **320**, A+2A adder **322**, and partial product generator **324**. Stage **2** includes shifter **308**, compression block **310**, and lower end adder **312**.

Stage **3** includes adder **314**, and incrementer **316**. Stage **4** includes leading-zero-detector & final output **318**.

**[0037]** Input preparation **302** receives operands A, B, and C and partitions the mantissa and exponent portions. Multiplier **304** performs the multiplication of the mantissas of the A and B operands. Radix 8 Booth recoding logic formats data for partial product generator **324**. A+2A adder **322** creates the 3A signal required for radix 8 processing. Partial product generator **324** creates the nine partial products needed to support radix 8 processing. Exponent and sign logic **306** analyzes the relative exponents of the operands. Shifter **308** positions the C operand for addition with the eight partial products. Compression block **310** combines the partial products to produce carry and sum terms. Lower end adder **312** generates the least significant figures of the sum. Adder **314** adds the upper portions of the carry and sum terms. Incrementer **316** compensates for overflow and sign effects. Leading-zero-detector & final output **318** normalizes the result of the math operations. FADD optimization **326** provides gating signals for add-only operations. FMUL optimization **328** provides gating signals for multiply-only operations.

**[0038]** The full functionality of subsystem **300** is utilized when the three input operands have significant values, that is, when none of them has value of zero or one. In this case, input preparation **302** receives the operands and partitions the mantissas and exponents. Input preparation **302** forwards the mantissas of the A and B operands to multiplier **304**, which, as noted, implements a radix 8 Booth encoder. Booth encoding is a conventional approach to performing multiplication in digital systems, which makes use of the fact that a string of ones in a binary number can be broken into the difference of two binary numbers. Operands can thus be deconstructed and coded into simpler, shifted terms and performing simpler operations can replace the multiplication. For radix 8 Booth multiplication, a 3A term is required. Radix 8 Booth recoding logic **320** performs the data preparation required prior to generating the partial products. A+2A adder **322** generates the 3A term. Allocating these functions to the first stage relieves the timing pressure on the second stage. Consequently, the reduced burden on the second stage logic allows a reduction in the area of the second stage.

**[0039]** As the mantissa of a floating point representation of a number is always positive, the last partial product is also positive. This makes it possible to predict the carry out from the addition of the partial products when compressed with the aligned mantissa of the C operand. Thus, adder **314** can sum the wide portion of the final value prior to pre-normalization. This allows incrementer **316** to perform the addition of the higher order bits, thus saving additional area.

**[0040]** When the A operand has a value of zero, the multiply operation becomes trivial. In this case FADD optimization **326** gates off elements as above, and generates the result (A*0+C) or simply C. A corresponding scenario occurs when the B operand has a value of one. In this case FADD optimization **326** gates off elements as above, and generates the result (A+C). As above, subsystem **300** realizes a reduction in power usage. When the B operand is zero, the exponent of the B operand is set to zero.

**[0041]** Input preparation **302** forwards the three exponents to exponent and sign logic **306**. Exponent and sign logic **306** analyzes the relative values of the exponents to determine the positioning of the C operand mantissa with respect to the product of the A and B operands. Shifter **308** then appropriately positions the C operand for the subsequent addition. An improved multi-step approach to shifter **308** provides a reduction in operating power by virtue of having a narrower binary word length as well as the ability to inhibit data transfer.

**[0042]** When the C operand has a value of zero, the addition portion of subsystem **300** operation becomes trivial, in that (A*B+C) equals (A*B) when C equals zero. When input preparation **302** determines that the C operand has a value of zero, FMUL optimization **328** gates off shifter **308** and inhibits the data transfer of the C mantissa to shifter **308**. FMUL optimization **328** thus provides an improvement in power usage while maintaining an accurate computation result of (A*B)

**[0043]** FIG. **4** is a flow diagram of method steps for performing math operations in a segmented FFMA unit, according to one embodiment of the present invention. Although the method steps are described in conjunction with the systems of FIG. **1-3**, persons skilled in the art will understand that any system configured to perform the method steps, in any order, is within the scope of the present invention.

**[0044]** In various embodiments, for example, subsystem **300** may be configured to implement the method **400** in order to gate off portions of the FFMA element that are not needed for less complex add-only and multiply-only operations.

**[0045]** As shown, the method **400** begins at step **402**, where input preparation **302** determines if the incoming C operand has a value of zero or the opcode is FMUL. If, at step **402**, input preparation **302** determines that the incoming C operand has a value of zero or that the opcode is FMUL, then input preparation **302** proceeds to step **412** and continues as discussed below. If, at step **402**, input preparation **302** determines that the incoming C operand does not have a value of zero and the opcode is not FMUL, then input preparation **302** proceeds to step **404**. At step **404**, input preparation **302** determines if incoming A operand has a value of zero or if the opcode is FADD. If, at step **404**, input preparation **302** determines that incoming A operand does not have a value of zero and the opcode is not FADD, then input preparation **302** proceeds to step **406**. At step **406**, input preparation **302** determines if incoming B operand has a value of zero or one. If, at step **406**, input preparation **302** determines that incoming B operand does not have a value of zero or one, then input preparation **302** proceeds to step **408**. At step **408**, FADD optimization **326** enables partial product generator **324** and applies A+2A adder **322** result to partial product generator **324**. Further, FMUL optimization **328** enables shifter **308** and applies the mantissa of operand C to shifter **308**. Hence, all constituent components of subsystem **300** are active, and subsystem **300** performs a full FFMA operation to generate a final output of (A*B+C).

**[0046]** Returning now to step **404**, if input preparation **302** determines that the A operand has a value of zero or that the opcode is FADD, then input preparation **302** proceeds to step **492**. At step **492**, if input preparation **302** determines that the opcode is FADD, input preparation **302** sets the exponent of operand B to a value of one. Alternatively, if, at step **492**, input preparation **302** determines that operand A has a value of zero, input preparation **302** changes the opcode from FFMA to FADD and sets B exponent to a value of zero. Input preparation **302** then proceeds to step **416**. At step **416**, FADD optimization **326** gates off A+2A adder **322** and proceeds to step **418**. At step **418**, FADD optimization **326** gates off partial product generator **324** and proceeds to step **420**. At step **420**, subsystem **300** performs an add-only, or FADD, operation to generate a final output. When the A operand has

a value of zero, the final output is simply equal to the C operand. If the opcode is FADD, the output is (A+C)

**[0047]** Returning now to step **406**, if input preparation **302** determines that the B operand has a value of zero or one, then input preparation **302** proceeds to step **410**. At step **410**, if the B operand has a value of one, input preparation **302** maps the opcode from FFMA to FADD. If, at step **410**, the B operand has a value of zero, input preparation **302** sets the exponent of operand B to zero. Input preparation **302** then proceeds to step **416**. At step **416**, FADD optimization **326** gates off A+2A adder **322** and proceeds to step **418**. At step **418**, FADD optimization **326** gates off partial product generator **324** and proceeds to step **420**. At step **420**, subsystem **300** performs an add-only, or FADD, operation to generate a final output. When the B operand has a value of one, the final output is equal to (A+C). When the B operand has a value of zero, the final output is simply equal to the C operand.

**[0048]** Returning now to step **412**, if input preparation **302** determines that the A operand has a value of zero, then input preparation **302** proceeds to step **493**. At step **493**, input preparation **302** sets the opcode to FADD, sets the exponent of the B operand to zero, and proceeds to step **416**. At step **416**, FADD optimization **326** gates off A+2A adder **322** and proceeds to step **418**. At step **418**, FADD optimization **326** gates off partial product generator **324** and proceeds to step **420**. At step **420**, subsystem **300** performs an add-only, or FADD, operation to generate a final output. When the A operand has a value of zero, the final output is equal to zero.

**[0049]** If, at step **412**, input preparation **302** determines that the A operand does not have a value of zero, then input preparation **302** proceeds to step **414**. At step **414**, if input preparation **302** determines if operand B has a value of zero or one. If, at step **414**, if input preparation **302** determines that operand B has a value of zero or one, then input preparation **302** proceeds to step **494**. At step **494**, if the B operand has a value of one, input preparation **302** changes the opcode from FFMA to FADD. If, at step **494**, the B operand has a value of zero, input preparation **302** sets the exponent of operand B to zero. Input preparation **302** then proceeds to step **416**. At step **416**, FADD optimization **326** gates off A+2A adder **322** and proceeds to step **418**. At step **418**, FADD optimization **326** gates off partial product generator **324** and proceeds to step **420**. At step **420**, subsystem **300** performs an add-only, or FADD, operation to generate a final output equal to (A+C). When the B operand has a value of one, the final output is equal to A, as the C operand has a value of zero at this stage. When the B operand has a value of zero, the final output is equal to zero.

**[0050]** If, at step **414**, input preparation **302** determines that operand B does not have a value of zero or one, then input preparation **302** proceeds to step **422**. At step **422**, FMUL optimization **328** gates off the transfer of the C operand to shifter **308**. Input preparation **302** then proceeds to step **424**. At step **424**, FMUL optimization **328** gates off the shifter **308**. Input preparation **302** then proceeds to step **426**. At step **426**, subsystem **300** performs a multiply-only, or FMUL, operation to generate a final output equal to (A*B).

**[0051]** In sum, a four cycle FFMA unit includes a radix 8 Booth encoder multiplier that is partitioned over two stages with the compression element allocated to the second stage. The unit further includes an improved shifter design. Processing logic analyzes the input operands, detects values of zero and one, and inhibits portions of the processing logic accordingly. When one of the multiplicand inputs has a value of zero or one, the required multiplication becomes trivial, and the unit inhibits the associated coding logic and data transfer to reduce power consumption. The unit then performs an add-only operation. When the addend input has a value of zero, the addition becomes trivial, and the unit inhibits the improved shifter and data transfer to further reduce power consumption. The unit then performs a multiply-only operation.

**[0052]** One advantage of the disclosed approach is that a substantial reduction in area may be realized along with reduced power usage when performing add-only operations. Further, the improvement of the shifter design allows significant reduction in dynamic power consumption when performing multiply-only operations as this allows gating off the shifter logic when performing a floating point multiply (FMUL) operation.

**[0053]** In addition, since a floating point add (FADD) operation involves setting operand B to a value of one, the result of reading operand B ensures that the 3A term is not required to generate the product A*1, or simply A. This allows the (A+2A) term to be gated, resulting in lower power FADD emulation. Finally, the FADD and FMUL are mapped onto the same hardware optimized to perform a full FFMA. As the FADD and FMUL power is lower than the FFMA, one embodiment evaluates the incoming operands when the operation code is FFMA and maps the operation to a FADD or FMUL to lower overall power.

**[0054]** The invention has been described above with reference to specific embodiments. Persons of ordinary skill in the art, however, will understand that various modifications and changes may be made thereto without departing from the broader spirit and scope of the invention as set forth in the appended claims. The foregoing description and drawings are, accordingly, to be regarded in an illustrative rather than a restrictive sense.

**[0055]** Therefore, the scope of embodiments of the present invention is set forth in the claims that follow.

The invention claimed is:

**1**. A system configured to perform an arithmetic operation, comprising:

an arithmetic element configured to:

receive a first operand, a second operand, and a third operand in a first stage of the arithmetic element,

recode the first operand in the first stage of the arithmetic element to generate a first recoded operand,

recode the second operand in the first stage of the arithmetic element to generate a second recoded operand,

generate a first intermediate term that is three times the first operand,

generate a first set of partial products in a second stage of the arithmetic element based on the recoded first operand, the recoded second operand, and the first intermediate term,

combine the first set of partial products to generate a first product, and

add the first product to the third operand to generate a first result.

**2**. The system of claim **1**, wherein the arithmetic element includes a multiplication element configured to recode the first operand, recode the second operand, and generate the first set of partial products.

**3**. The system of claim **2**, wherein the multiplication element comprises a radix 8 Booth multiplier.

**4**. The system of claim **2**, wherein the arithmetic element is further configured to:

receive a fourth operand, a fifth operand, and a sixth operand in the first stage of the arithmetic element;
determine that the fourth operand has a value of zero;
gate off the multiplication element; and
generate a second result that is equal to the sixth operand.

**5**. The system of claim **2**, wherein the arithmetic element is further configured to:
receive a fourth operand, a fifth operand, and a sixth operand in the first stage of the arithmetic element;
determine that the fifth operand has a value of zero;
set an exponent associated with the fifth operand to zero; and
gate off the multiplication element; and
generate a second result that is equal to the sixth operand.

**6**. The system of claim **2**, wherein the arithmetic element is further configured to:
receive a fourth operand, a fifth operand, and a sixth operand in the first stage of the arithmetic element;
determine that the fifth operand has a value of one; and
gate off the multiplication element; and
add the fourth operand to the sixth operand to generate a second result.

**7**. The system of claim **1**, wherein the arithmetic element further includes addition logic configured to add the first product to the third operand to generate the first result.

**8**. The system of claim **7**, wherein the arithmetic element is further configured to:
receive a fourth operand, a fifth operand, and a sixth operand in the first stage of the arithmetic element;
determine that the sixth operand has a value of zero;
generate a second intermediate term that is three times the fourth operand;
gate off a portion of the addition logic; and
perform a multiplication operation with the fourth operand, the fifth operand, and the second intermediate term to generate a second result.

**9**. The system of claim **1**, wherein the arithmetic element is configured to add the first product to the third operand by:
combining the first product with a shifted version of the third operand to generate a set of bits associated with the first result; and
incrementing the set of bits to generate the first result.

**10**. A computer-implemented method for performing an arithmetic operation, the method comprising:
receiving a first operand, a second operand, and a third operand in a first stage of an arithmetic element;
recoding the first operand in the first stage of the arithmetic element to generate a first recoded operand;
recoding the second operand in the first stage of the arithmetic element to generate a second recoded operand;
generating a first intermediate term that is three times the first operand;
generating a first set of partial products in a second stage of the arithmetic element based on the recoded first operand, the recoded second operand, and the first intermediate term;
combining the first set of partial products to generate a first product; and
adding the first product to the third operand to generate a first result.

**11**. The computer-implemented method of claim **10**, further comprising:
receiving a fourth operand, a fifth operand, and a sixth operand in the first stage of the arithmetic element;
determining that the fourth operand has a value of zero;
gating off a multiplication element configured to multiply the fourth operand with the fifth operand; and
generating a second result that is equal to the sixth operand.

**12**. The computer-implemented method of claim **10**, further comprising:
receiving a fourth operand, a fifth operand, and a sixth operand in the first stage of the arithmetic element;
determining that the fifth operand has a value of zero;
setting an exponent associated with the fifth operand to zero;
gating off a multiplication element configured to multiply the fourth operand and the fifth operand; and
generating a second result that is equal to the sixth operand

**13**. The computer-implemented method of claim **10**, further comprising
receiving a fourth operand, a fifth operand, and a sixth operand in the first stage of the arithmetic element;
determining that the fifth operand has a value of one;
gating off a multiplication element configured to multiply the fourth operand and the fifth operand; and
adding the fourth operand to the sixth operand to generate a second result.

**14**. The computer-implemented method of claim **10**, further comprising:
receiving a fourth operand, a fifth operand, and a sixth operand in the first stage of the arithmetic element;
determining that the sixth operand has a value of zero;
generating a second intermediate term that is three times the fourth operand;
gating off a shifter element configured to shift the sixth operand; and
performing a multiplication operation with the fourth operand, the fifth operand, and the second intermediate term to generate a second result.

**15**. A computing device configured to perform an arithmetic operation, comprising:
an arithmetic element, including:
a multiplication element configured to:
receive a first operand, a second operand, and a third operand in a first stage of an arithmetic element,
recode the first operand in the first stage of the arithmetic element to generate a first recoded operand,
generate a first intermediate term that is three times the first operand,
recode the second operand in the first stage of the arithmetic element to generate a second recoded operand,
generate a first set of partial products in a second stage of the arithmetic element based on the recoded first operand, the recoded second operand, and the first intermediate term;
addition logic configured to:
combine the first set of partial products to generate a first product, and
add the first product to the third operand to generate a first result.

**16**. The computing device of claim **15**, wherein the arithmetic element is further configured to:
receive a fourth operand, a fifth operand, and a sixth operand in the first stage of the arithmetic element;
determine that the fourth operand has a value of zero;
gate off the multiplication element; and
generate a second result that is equal to the sixth operand.

**17**. The computing device of claim **15**, wherein the multiplication element comprises a radix 8 Booth multiplier.

**18**. The computing device of claim **15**, wherein the addition logic includes a shifter configured to shift the third operand to generate a shifted version of the third operand.

**19**. The computing device of claim **18**, wherein the addition logic adds the first product to the third operand by:

combining the first product with the shifted version of the third operand to generate a set of bits associated with the first result;

incrementing the set of bits to generate the first result.

**20**. The computing device of claim **19**, wherein the arithmetic element is further configured to:

receive a fourth operand, a fifth operand, and a sixth operand in the first stage of the arithmetic element;

determine that the sixth operand has a value of zero;

generate a second intermediate term that is three times the fourth operand;

gate off a portion of the addition logic; and

perform a multiplication operation with the fourth operand, the fifth operand, and the second intermediate term to generate a second result.

* * * * *