Project, Part 1

CS 4341 Spring 2026

~~**Due February 13th, 11:59 pm**~~

Due: February 20th, 11:59 pm

---

1 Objective

For this first part of the project, a cohort must be created, the bookwork done, a software package chosen, and the programming problem solved. The goals of this phase are for the students to form a Cohort, and to install and start to manipulate the Verilog language.

1.1 Instructions:

This assignment is a Cohort Assignment. Students will form a team, called a cohort, to complete this assignment. While everyone may work together and share information, <u>each member of the cohort must submit their own copy of the project</u>.

1.2 Products:

To that end, certain phases must be completed. This phase consists of

- Join a Cohort, 10 points
- Project Description, 10 points
- Bookwork, 30 points
- Program, 50 points
- Citations, Required

1.3 Notes on Grading

This project phase is graded based on the following results

- Documents: All documents are submitted. If a document is not submitted or is unreadable, then full points are deducted. If the documents are confusing, badly spelled, or badly drawn, 2 points will be deducted for each time the grader is confused.
- Bookwork is a sample problem for the cohort to work on and is practice for the exams. If the cohort assigns just one person with the bookwork, rather than discussing it as a group, and the grades diminish, that is the responsibility of the cohort.
- Programming: The program portion must be correct, and the instructions followed. Students in the past have turned in working code…that did not follow the directions. Full points will be deducted if the code is incorrect, even if the output is correct.
- Citations: If the cohort uses software to solve problems, which includes current artificial intelligence, then that software must be cited. Other software includes Logisim, Circuitverse, and Digital I/O. A cohort using software to check their work is not wrong.
- Example Software Citations:
    - OpenAI. 2023. ChatGPT (Mar 7 version) [Large language model]. https://chat.openai.com/chat
    - CircuitVerse. 2026. *Online Digital Logic Circuit Simulator*. https://circuitverse.org/

2 Cohort: (10 points)

For the term project, students are to join a cohort of one or more students to work on the project.

2.1 Naming the Cohort and Writing the Description

Each Cohort should have a good, clear cohort name. The name chosen must be suitable to be put into the online gradebook. The online gradebook has a 32-character limit, and yes, the cohort's name must be readable, useable characters. Such a name can be silly or serious, but it needs to be syllabus appropriate, recognizable, and understandable. Do not use Emoji's or asterisks in the name of the Cohort. Include the reason the name was chosen.

2.2 How big should a Cohort be?

The Cohort should be between four to five people. The cohort may be smaller or larger. The smallest size of a cohort is one, and the largest size of a cohort is the entire class. The average size is four to five students in a cohort. A cohort of one has no way of handling a missed turn-in or other critical issue. A cohort that is too big tends to always lose people due to communication bottlenecks.

Once the Cohort is formed, cohorts are expected to stay connected with each other using current network software and in-person meetings. GitHub, Facebook, Discord, GroupMe, Slack, and whatever the next cool software will be. In addition, face-to-face meetings are strongly recommended. Class time will be made available for Cohort meetings.

2.3 What to turn in

Turn in a PDF <*CohortName*>.*Charter.pdf* with the following information:

- The name of the cohort.
- The reason for the name of the cohort.
- A listing of the members of the cohort.

3 Project Description: (10 points)

3.1 Project Requirements

- The project must be written in a Virtual Hardware Design Language, including VHDL, iVerilog, and SystemVerilog.
- C++, Python and Java cannot be used as part of the running project. However, using a different programming language to generate a large amount of Verilog Code as a text file is allowed.
- The project must be an ALU or an equivalent circuit. ALUs have a memory register, a set of commands, a feedback loop, an input, a result output, and an error code. Other systems should be at least as complex.
- Programming must be done be done mostly structurally.
- Decisions and branching should be using multiplexers and decoders and be structural.
- Addition and subtraction should be structural.
- Long division and modulus should be behavioral.
- Multi-bit operations, such as a 10-bit AND, must be in their own module.
- Projects will be sequential in nature and have a set of commands that go against the clock.

3.2 Project Examples

- Building a 32-bit ALU which has sixteen opcodes and use the system to solve 5 classic math and physics problems, and to show 5 Boolean algebra equations.
- Building the control circuit for a lightsaber. The circuit keeps track of the length of the blade, the color of the blade, and the number of blades. The control circuit receives opcodes to change the length, color, and number of blades.
- Building the control system for a spiderman-style web shooter. The system would have sixteen opcodes based on a binary pattern that represents the fingers of a hand. For example, extending the index finger and the pinkie finger would be the opcode 1001.
- Building a circuit chip that would perform RSA encryption and decryption or other security protocol.
- Building the control circuit for an interplanetary rover. The robot has a set of operations, to move forward, backward, turn left, or turn life. An additional command would be to charge the battery with a solar panel. Additional features might include a helicopter probe with a take-off and landing. The system should be able to record the robot's path.
- Building the control circuit for a quadcopter. Use registers for the power and direction of each of the four blades. The opcodes to the quadcopter will change the values on the motors. The system should be able to record the robot's path.
- Industry level projects have been done in the past by students who already were doing Verilog on the job and had permission to use additional software libraries. One year, a student created the arcade game Pac-Man as a hardware circuit using a Verilog 256-color Video Graphics Array library.

3.3 What to turn in

Turn in a PDF *<CohortName>.ProjectDescription.pdf* with the following information:

- What Virtual Hardware Design Language the cohort will be using
- A description of the project. The description can be one of the examples above, or it can be original. The description must contain enough information to indicate it is at least as complex as an ALU.

4 Bookwork (30 points)

Work out and solve the following problems. These are NOT programming problems. These are practice problems.

4.1 Given:

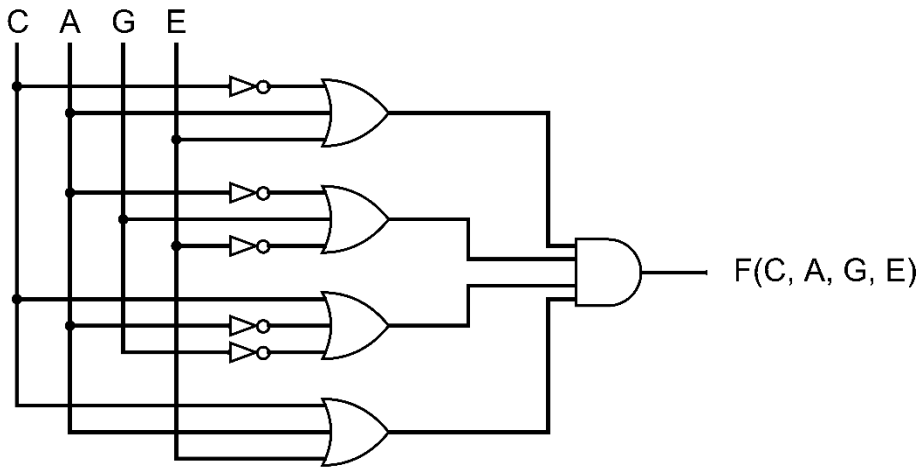

4.2 Find:

- Part 1 (10 points)
  - Show the truth table for this circuit.
    - Include a column for each OR gate, and the final AND gate.
  - Show the minterm equation for this circuit.
  - Show the SIGMA Σ notation for this circuit.
  - Show the maxterm equation for this circuit.
  - Show the PI Π notation for this circuit.
- Part 2 (10 points)
  - Perform a K-Map to find the normalized equation of this circuit.
  - Show the K-Map for the truth-table.
  - Show an implicant table.
  - Show the ***normalized*** equation.
  - Show the truth-table of the normalized equation
    - Include a column for each AND gate and the final OR gate.
    - The new truth table should match the previous truth table.
- Part 2 (10 points)
  - Show the new circuit from the normalized equation.
  - Convert the normalized circuit into a NAND-only circuit.

4.3 What to turn in

Turn in a PDF *<CohortName>.Bookwork.pdf* with the following information:

- Part 1, showing the truth table, the two equations, and the two notations.
- Part 2, showing the K-Map, implicant table, normalized equation, and the verification truth table.
- Part 3, showing the new circuit, and the NAND form of the new circuit.

5 Implement Gate-based Code (50 points)

Being the first phase of the project, what is required includes turning a truth table into a set of equations in a simulation in Verilog using a structured programming style. Structured programming is different from coding the equations in C++ or Java and dumping the output.

The program must meet the following requirements.

5.1 Requirements (5 points)

5.1.1 Requirement 1: Software Discovery

Icarus/iVerilog and System Verilog and VHDL are a few versions of a virtual hardware design language. If I wait a few months, another may appear. Which language did you download, and what editor are you using? Include this as a comment at the top of your code that contains the Testbench (requirement 2).

5.1.2 Requirement 2: Testbench

The main function of the program must be named testbench. This contains a portion called the ***stimulus***. The testbench will invoke a module called breadboard passing the inputs and receiving the outputs.

5.1.3 Requirement 3: Breadboard

The breadboard module will be the workspace where circuits will be assembled in the code. For this first phase, the program will concentrate on gate logic.

5.2 Requirement 4: Equations (40 points)

Solve for the ***minterm form*** of the 10 equations for the following truth table, turn these equations into statements in the program. The 10 individual circuits for these equations should be in the breadboard module, but the output should be displayed in the testbench.

#	w	x	y	z	f0	f1	f2	f3	f4	f5	f6	f7	f8	f9
0	0	0	0	0	1	0	0	1	1	1	1	1	0	1
1	0	0	0	1	1	1	0	1	1	1	0	1	0	0
2	0	0	1	0	1	0	0	0	1	1	0	1	0	0
3	0	0	1	1	0	1	0	0	1	0	0	1	0	1
4	0	1	0	0	1	1	1	1	1	0	0	0	0	0
5	0	1	0	1	1	0	0	0	0	1	0	1	0	1
6	0	1	1	0	0	1	0	1	1	0	1	1	1	1
7	0	1	1	1	1	1	1	0	0	0	0	1	1	0
8	1	0	0	0	0	0	1	1	1	1	1	0	1	0
9	1	0	0	1	1	0	0	0	1	0	1	1	1	1
10	1	0	1	0	1	0	1	1	1	0	1	0	0	0
11	1	0	1	1	1	0	0	0	1	1	0	1	1	1
12	1	1	0	0	1	1	1	0	0	0	1	0	0	0
13	1	1	0	1	1	0	0	0	1	0	0	1	1	1
14	1	1	1	0	0	0	0	1	1	1	1	0	0	1
15	1	1	1	1	1	1	0	0	1	0	1	1	0	1

5.3 Requirement 5: Output (5 points)

The result of the output of the Verilog should match the truth table, as a text output instead of a graphic. The two tables should match. Having nothing but output statements for the program is not acceptable.

5.4 What to turn in

- The simulator code with the correct comments and structure. The file should be named <Cohort>.part1.v or other appropriate extension
- A copy of the output as a text file, in the form of <Cohort>.output1.txt