Part 1

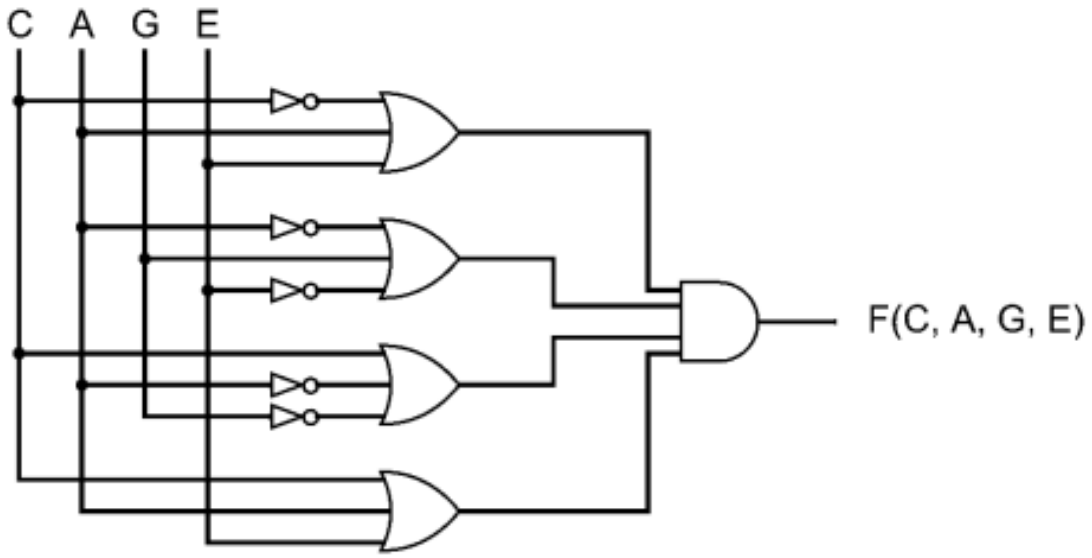

<u>Truth Table</u>

Base Variables:
C
A
G
E

Algebraic Functions:
Q = C’
W = A’
R = G’
Y = E’
U = Q + A + E
O = W + G + Y
P = C + W + R
S = C + A + E
D = UOPS

C	A	G	E	Q	W	R	Y	U	O	P	S	D
0	0	0	0	1	1	1	1	1	1	1	0	0
0	0	0	1	1	1	1	0	1	1	1	1	1
0	0	1	0	1	1	0	1	1	1	1	0	0
0	0	1	1	1	1	0	0	1	1	1	1	1
0	1	0	0	1	0	1	1	1	1	1	1	1
0	1	0	1	1	0	1	0	1	0	1	1	0
0	1	1	0	1	0	0	1	1	1	0	1	0
0	1	1	1	1	0	0	0	1	1	0	1	0
1	0	0	0	0	1	1	1	0	1	1	1	0
1	0	0	1	0	1	1	0	1	1	1	1	1
1	0	1	0	0	1	0	1	0	1	1	1	0
1	0	1	1	0	1	0	0	1	1	1	1	1
1	1	0	0	0	0	1	1	1	1	1	1	1
1	1	0	1	0	0	1	0	1	0	1	1	0
1	1	1	0	0	0	0	1	1	1	1	1	1
1	1	1	1	0	0	0	0	1	1	1	1	1

<u>Minterm Equation</u>

0010 -> C’A’GE’
0101 -> C’AG’E
0110 -> C’AGE’
0111 -> C’AGE
1000 -> CA’G’E’
1010 -> CA’GE’
1101 -> CAG’E

F(C, A, G, E) = C’A’GE’ + C’AG’E + C’AGE’ + C’AGE + CA’G’E’ + CA’GE’ + CAG’E

SIGMA Σ Notation

Σ(1, 3, 4, 9, 11, 12, 14, 15)

Maxterm Equation

0001 -> C + A + G + E’
0011 -> C + A + G’ + E’
0100 -> C + A’ + G + E
1001 -> C’ + A + G + E’
1011 -> C’ + A + G’ + E’
1100 -> C’ + A’ + G + E
1110 -> C’ + A’ + G’ + E
1111 -> C’ + A’ + G’ + E’

F(C, A, G, E) = (C + A + G + E’)(C + A + G’ + E’)(C + A’ + G + E)(C’ + A + G + E’)(C’ + A + G’ + E’)(C’ + A’ + G + E)(C’ + A’ + G’ + E)(C’ + A’ + G’ + E’)

PI Π Notation

Π(0, 2, 5, 6, 7, 8, 10, 13)

Part 2

<u>K-Map</u>

	G'E' 00	**G'E 01**	**GE 11**	**GE' 10**
C'A' 00	m_0 0	m_1 1	m_3 1	M_2 0
C'A 01	m_4 1	m_5 0	m_7 0	m_6 0
CA 11	m_{12} 1	m_{13} 0	m_{15} 1	m_{14} 1
CA' 10	m_8 0	m_9 1	m_{11} 1	m_{10} 0

	G'E' 00	G'E 01	GE 11	GE' 10
C'A' 00	m_0 0	m_1 1	m_3 1	M_2 0
C'A 01	m_4 1	m_5 0	m_7 0	m_6 0
CA 11	m_{12} 1	m_{13} 0	m_{15} 1	m_{14} 1
CA' 10	m_8 0	m_9 1	m_{11} 1	m_{10} 0

Implicant Table

Implicant	**C**	**A**	**G**	**E**	**Term**
{4, 12}	-	1	0	0	AG'E'
{1, 3, 9, 11}	-	0	-	1	A'E
{14, 15}	1	1	1	-	CAG

Normalized Equation

F(C, A, G, E) = AG'E' + A'E + CAG

Truth Table for Verification

Base Variables:
C
A
G
E

Algebraic Equations:
Q = AG'E'
R = A'E
U = CAG
D = Q + R + U

C	**A**	**G**	**E**	**Q**	**R**	**U**	**D**
0	0	0	0	0	0	0	0
0	0	0	1	0	1	0	1
0	0	1	0	0	0	0	0
0	0	1	1	0	1	0	1
0	1	0	0	1	0	0	1
0	1	0	1	0	0	0	0
0	1	1	0	0	0	0	0
0	1	1	1	0	0	0	0

1	0	0	0	0	0	0	0
1	0	0	1	0	1	0	1
1	0	1	0	0	0	0	0
1	0	1	1	0	1	0	1
1	1	0	0	1	0	0	1
1	1	0	1	0	0	0	0
1	1	1	0	0	0	1	1
1	1	1	1	0	0	1	1

Part 3

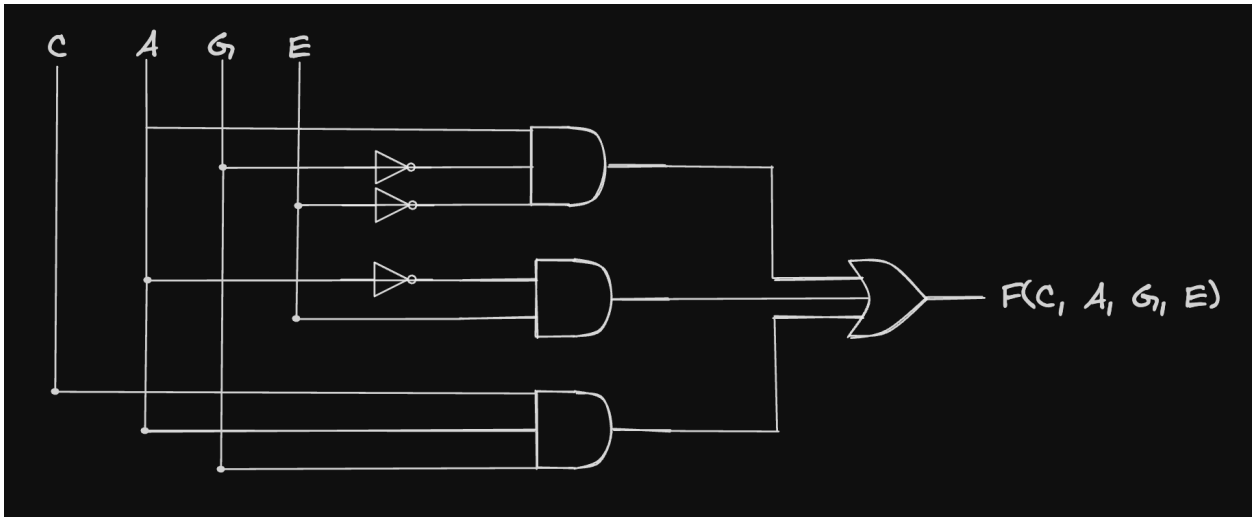

F(C, A, G, E) = ((AG’E’)' (A’E)' (CAG)')'

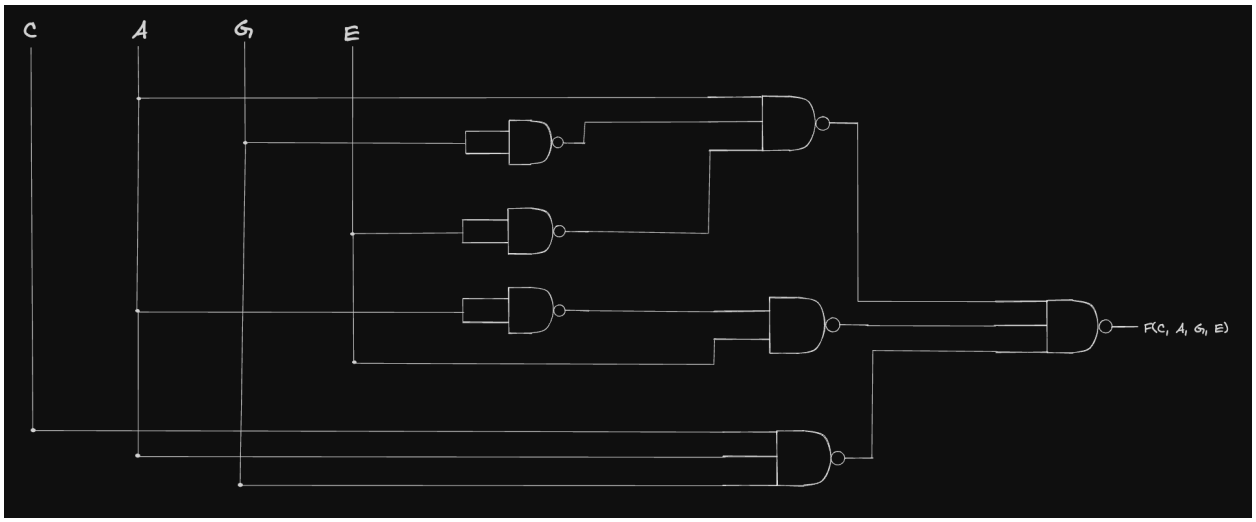

References:

Excalidraw. 2026. Excalidraw [Online digital drawing tool]. https://excalidraw.com/