Research Migration Project

https://esim.fossee.in/research-migration-project

The Research Migration Project is an initiative of FOSSEE, IIT Bombay that promotes the use of eSim for reproducing published research circuits originally implemented using proprietary simulation tools. The objective is to migrate these validated designs to eSim to build an open source resource database.

Name of the participant : Karnati Giridhar Reddy

Affiliation / Institution: Department of Electronics and Communication Engineering, Chaitanya Bharathi Institute of Technology (CBIT), Hyderabad, Telangana, India.

Title of the circuit:

Two-Stage Cascaded AD603 Wideband Variable Gain Amplifier with Linear-in-dB Control.

Theory/Description:

The AD603 (Analog Devices) is a voltage-controlled variable gain amplifier (VGA) with low noise (~1.3 nV/√Hz), wide bandwidth (~90 MHz), and a linear-in-dB gain control feature. Its gain changes linearly in dB with an applied DC control voltage, while bandwidth stays constant regardless of gain. A single AD603 provides about 40 dB of gain range. To get 80 dB (10,000x amplification), two AD603 stages are cascaded in series with direct coupling. The signal enters through R1 (100 Ω) into Stage 1 (U3), passes to Stage 2 (U4), and exits at pin 7 of U4 through a 22 µF coupling capacitor (C1) into a 1 kΩ load. A single control voltage VC (0–2 V) is applied to pin 1 of both AD603 chips simultaneously. This gives coordinated gain control across both stages with a sensitivity of 25 mV/dB. At VC = 0 V, the total gain is 0 dB. At VC = 1 V, it is 40 dB. At VC = 2 V, it reaches 80 dB. The circuit is powered by ±9 Vdc supplies with a 2.5 Vdc reference. Feedback resistors R3, R7 (2.49 kΩ each) and gain-setting resistors R8, R9 configure the operating point and gain partitioning between the two stages. The original design was simulated in OrCAD/PSpice (proprietary). This project migrates it to eSim (open-source).

Reason to reproduce with eSim :

1. The original circuit was simulated in OrCAD/PSpice, which requires a paid license. Migrating to eSim makes it freely accessible to students and researchers.
2. The AD603 VGA is widely taught in analog electronics and RF courses. Having a working eSim simulation helps students understand cascaded amplifier design, linear-in-dB gain control, and frequency response analysis through hands-on practice.
3. Since the AD603 does not have a ready-made model in eSim's library, this project also involves creating or importing a SPICE subcircuit model - adding a reusable component to the eSim ecosystem.
4. Reproducing the published PSpice results in eSim validates both the circuit design and eSim's capabilities for multi-stage amplifier simulation. The AD603 is used in radar receivers, SDR front-ends, AGC loops, and biomedical instrumentation, making this a practically relevant migration.

Expected Outcome/outputs :
Three analyses will be run to validate the circuit:

1. Transient Analysis - A 1 mV, 1 kHz sine wave is applied as input. The expected output is an amplified sine wave reaching about 3.28 V peak (at the default control voltage of ~1.85 V). Run time: 0.1 s, max step: 20 µs.

2. AC Sweep (Bode Plot) - Frequency swept from 100 Hz to 500 MHz, 100 points/decade. Expected: flat gain of ~70 dB in the mid-frequency band, rolling off beyond ~21 MHz.

3. Parametric Sweep (Gain vs. Control Voltage) - VC swept from 0 to 2 V. Expected: a straight-line plot of gain (dB) vs. VC. At VC = 0 V → 0 dB, VC = 1 V → 40 dB, VC = 2 V → 80 dB.

All results will be compared with the PSpice waveforms reported in the reference paper to confirm accuracy.

Circuit Diagram(s) :

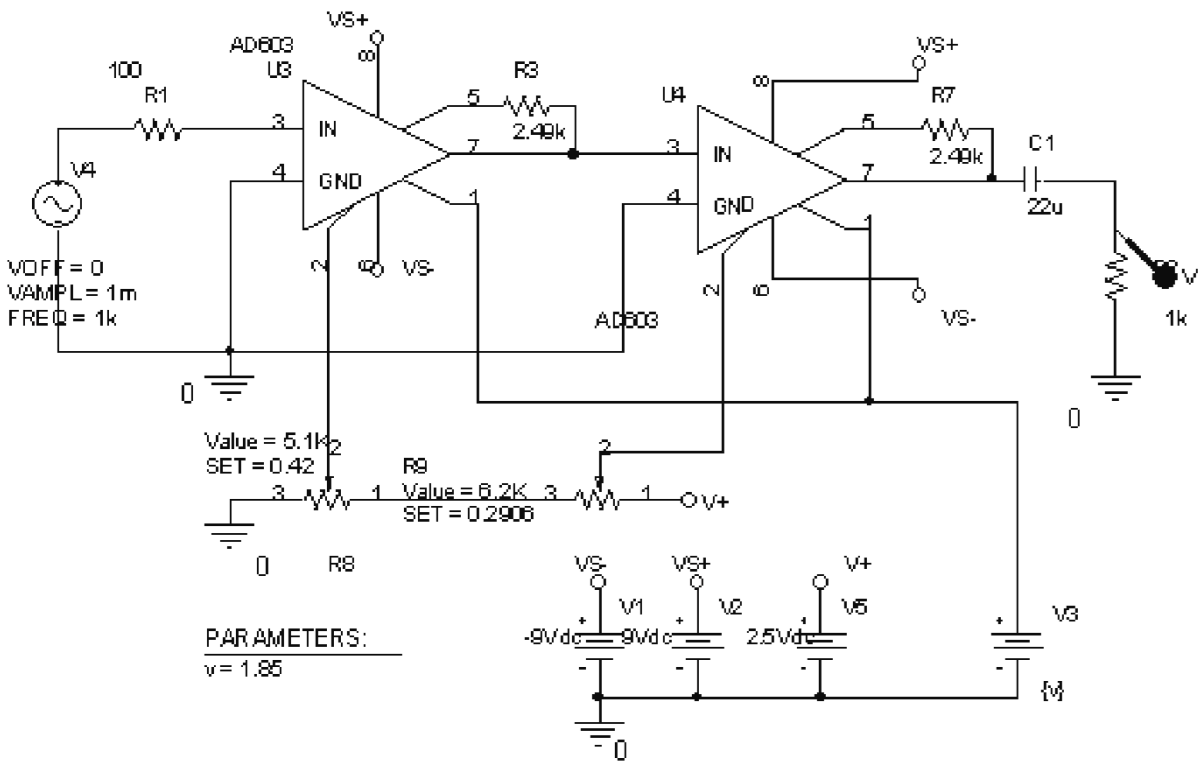

PSpice schematic of the two-stage AD603 amplifier.
Components: U3, U4 (AD603); R1 = 100 Ω; R3, R7 = 2.49 kΩ; R8 (5.1 kΩ, SET = 0.42); R9 (6.2 kΩ, SET = 0.2906); C1 = 22 µF; Load = 1 kΩ; V1 = −9 Vdc; V2 = 9 Vdc; V5 = 2.5 Vdc; V4 = AC source (1 mV, 1 kHz);
PARAMETERS: v = 1.85.
This will be redrawn in eSim's KiCad schematic editor during implementation.

Block Diagram (s) :

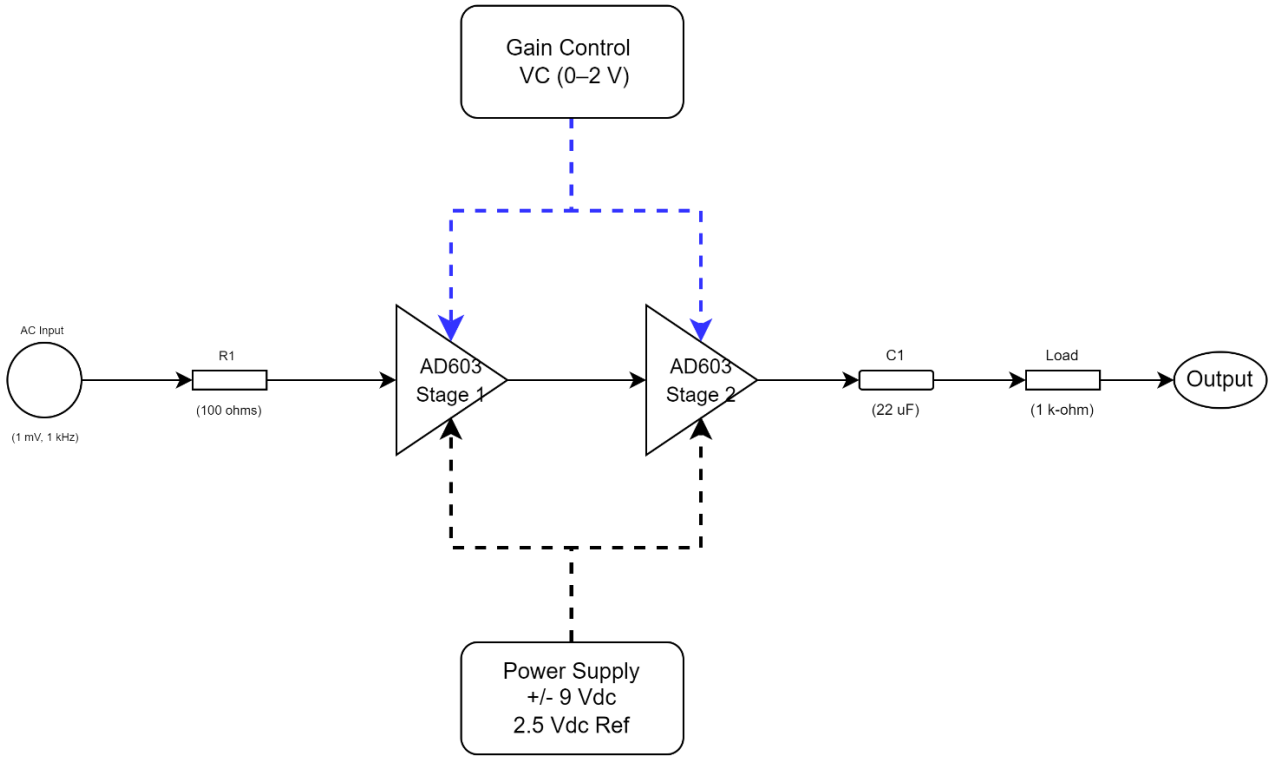

Expected Results:

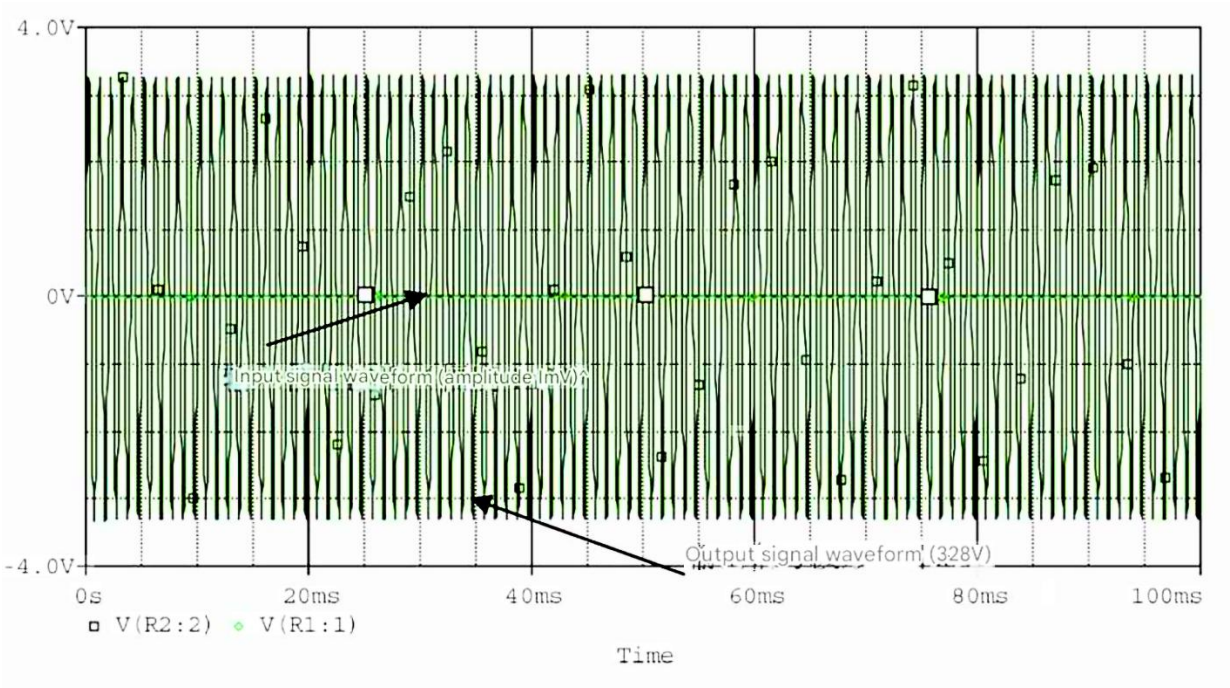

1. Transient Waveform - Input: 1 mV sine wave at 1 kHz. Output: ~3.28 V sine wave at the same frequency. Both plotted over 0–100 ms.

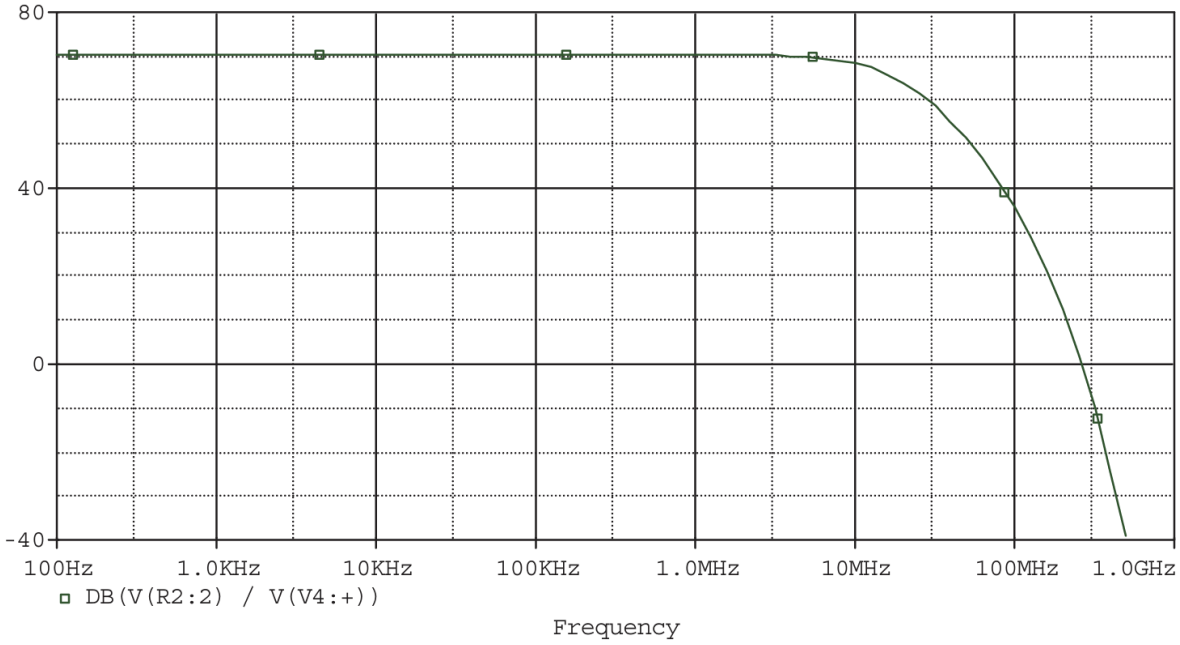

2. Bode Plot - Gain: ~70 dB flat in mid-band (1 kHz to 21 MHz), with roll-off at higher frequencies. Frequency axis: 100 Hz to 1 GHz.

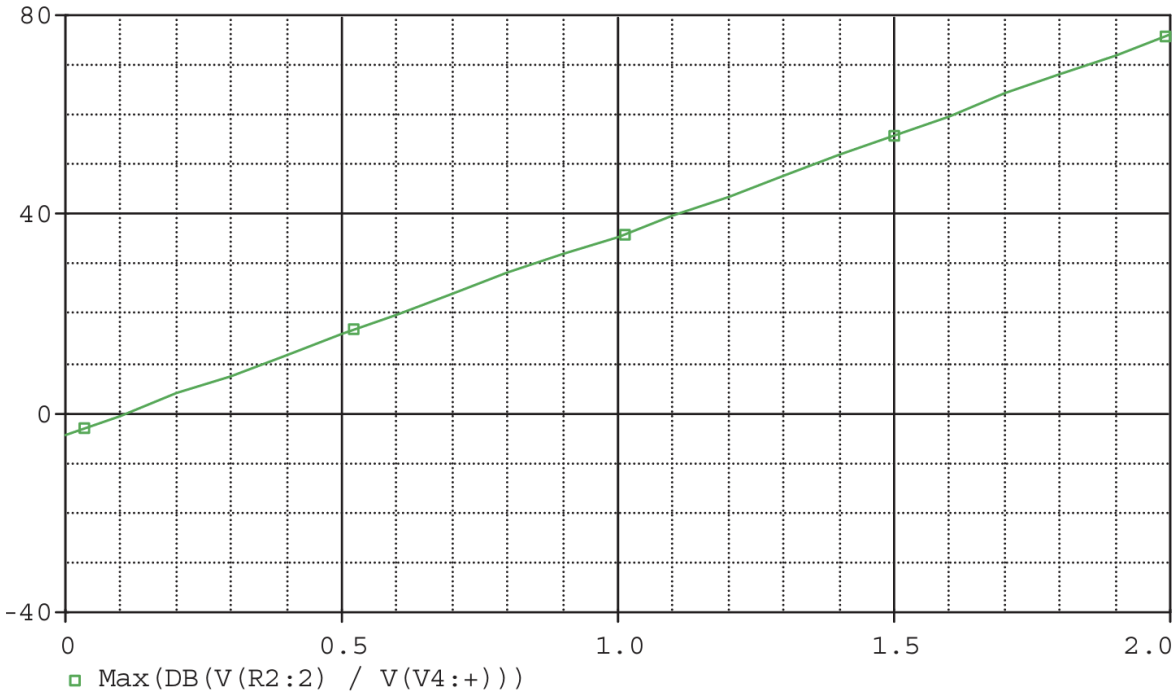

3. Gain vs. Control Voltage - Linear plot from (0 V, 0 dB) to (2 V, 80 dB). Slope: 40 dB/V.

These correspond to Figures 2, 3, and 4 of the reference paper.

Research Paper/Journal/etc. :

Title : Modeling and Its Simulation of AD603 based on PSpice software
Author : Guo Zipeng, Xiao Yongjun
Page No. : pp. 2330–2333
Link : IEEE Xplore - 2011 International Conference on Consumer Electronics, Communications and Networks (CECNet). ISBN: 978-1-61284-459-6 (in Chinese).

Source/Reference(s) :

1. AD603 Datasheet - Analog Devices (https://www.analog.com/en/products/ad603.html)

2. eSim Documentation - FOSSEE, IIT Bombay (https://esim.fossee.in/)

3. Sedra & Smith, Microelectronic Circuits (Op-amp and feedback amplifier theory)

4. Tang Yanfeng et al., “Design of numeric control, high-gain and wide bandwidth amplifier based on AD603,” Journal of Changchun University of Science and Technology, Vol. 33, pp. 81–83, Mar. 2010.

5. Wu Jianbin, Tian Mao, “Implementation of time varying gain amplifier based on the AD603,” Electronic Measurement Technology, Vol. 31, pp. 29–32, Apr. 2008.