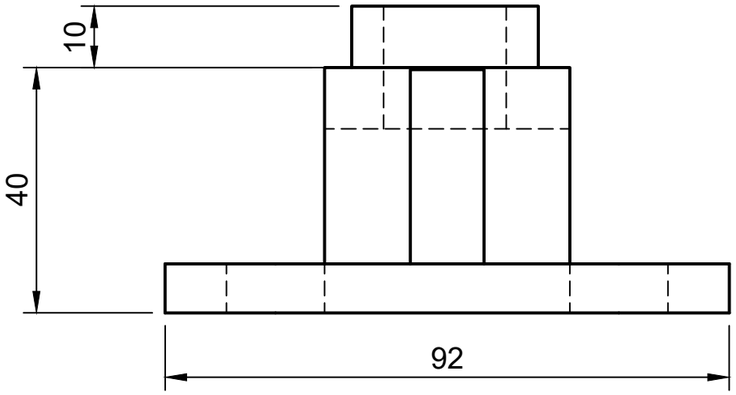

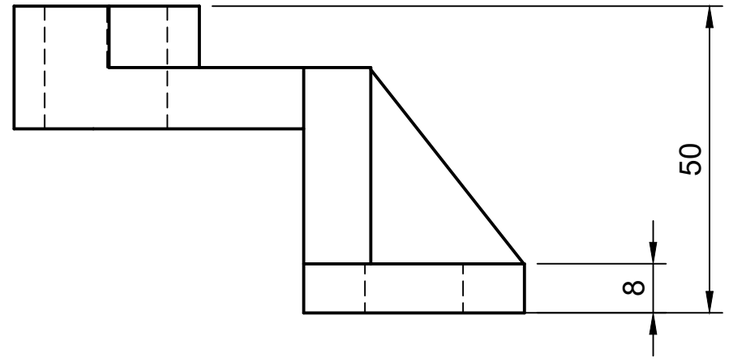

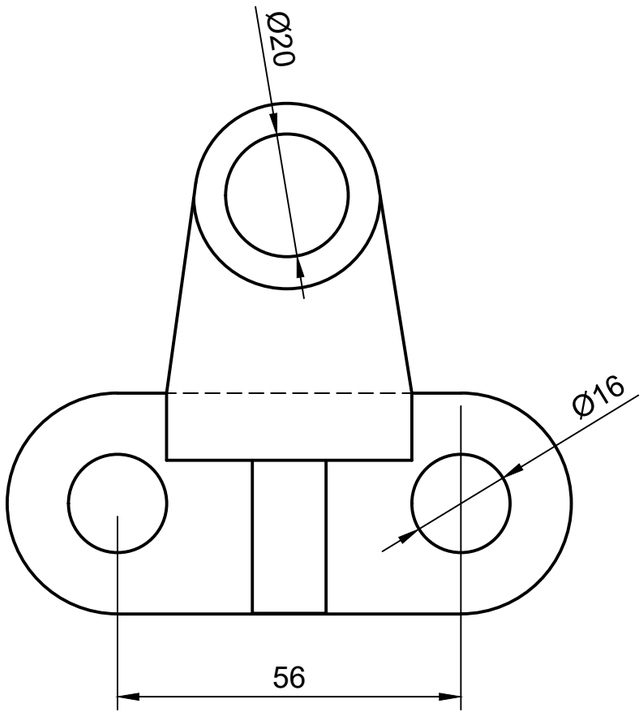

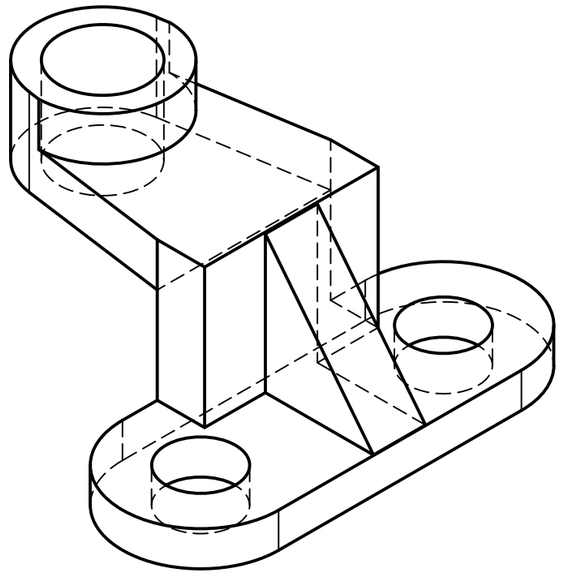

Dept.	Technical reference	Created by Girithick Rohan 27-02-2024	Approved by
		Document type 180	Document status
		Title exp3	DWG No.
			Rev. / Date of issue / Sheet 1/1