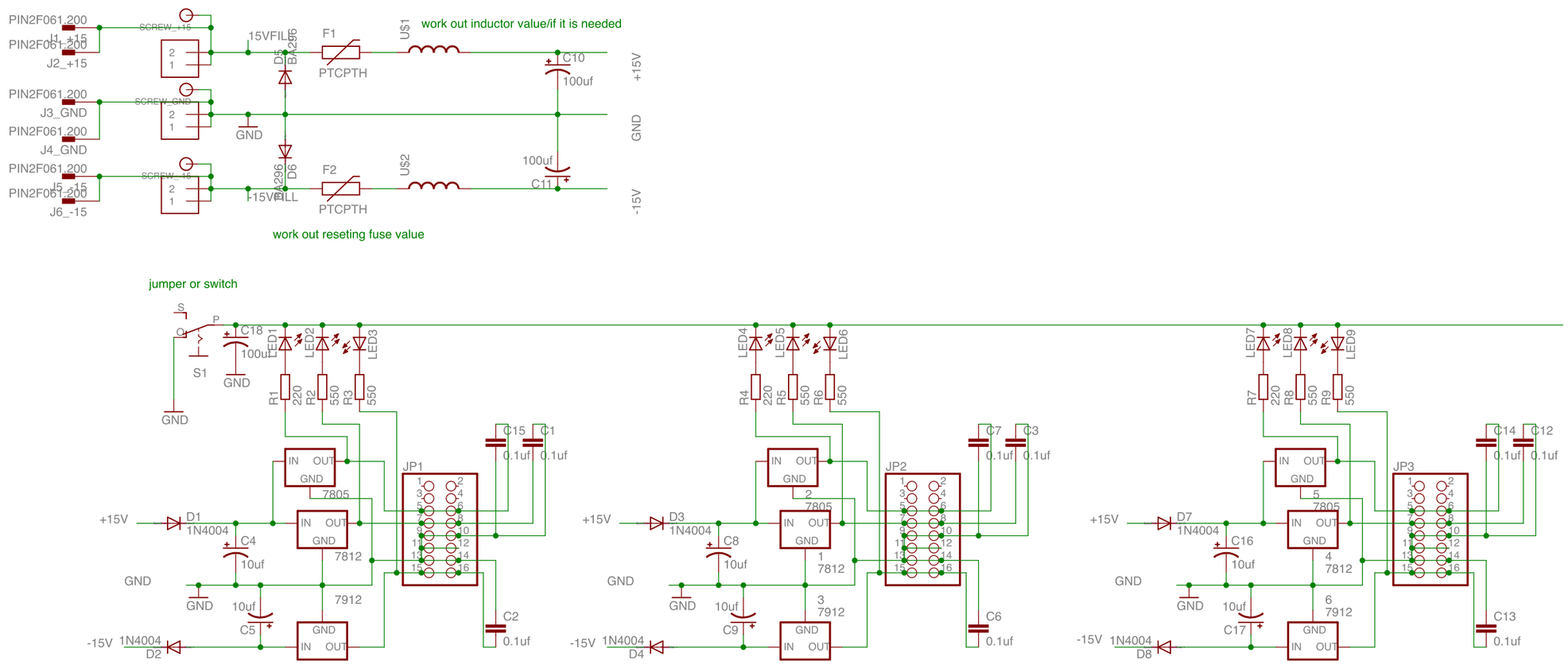
PIN2F061_200
J1_+15
PIN2F061_200
J2_+15
SCREW_+15
PIN2F061_200
J3_GND
PIN2F061_200
J4_GND
SCREW_GND
PIN2F061_200
J5_-15
PIN2F061_200
J6_-15
SCREW_-15
15VFILL
D5
BA296
GND
D6
BA296
-15VFILL
F1
PTCPTH
F2
PTCPTH
U$1
U$2
work out inductor value/if it is needed
C10
100uf
100uf
C11
+15V
GND
-15V
work out reseting fuse value
jumper or switch
S
P
O
S1
C18
100uf
GND
LED1
LED2
LED3
R1 220
R2 550
R3 550
IN OUT
GND
7805
7812
7912
JP1
C15 0.1uf
C1 0.1uf
C2 0.1uf
+15V
D1
1N4004
C4
10uf
GND
10uf
C5
-15V
1N4004
D2
LED4
LED5
LED6
R4 220
R5 550
R6 550
JP2
C7 0.1uf
C3 0.1uf
C6 0.1uf
D3
1N4004
C8
10uf
C9
1N4004
D4
LED7
LED8
LED9
R7 220
R8 550
R9 550
JP3
C14 0.1uf
C12 0.1uf
C13 0.1uf
D7
1N4004
C16
10uf
C17
1N4004
D8

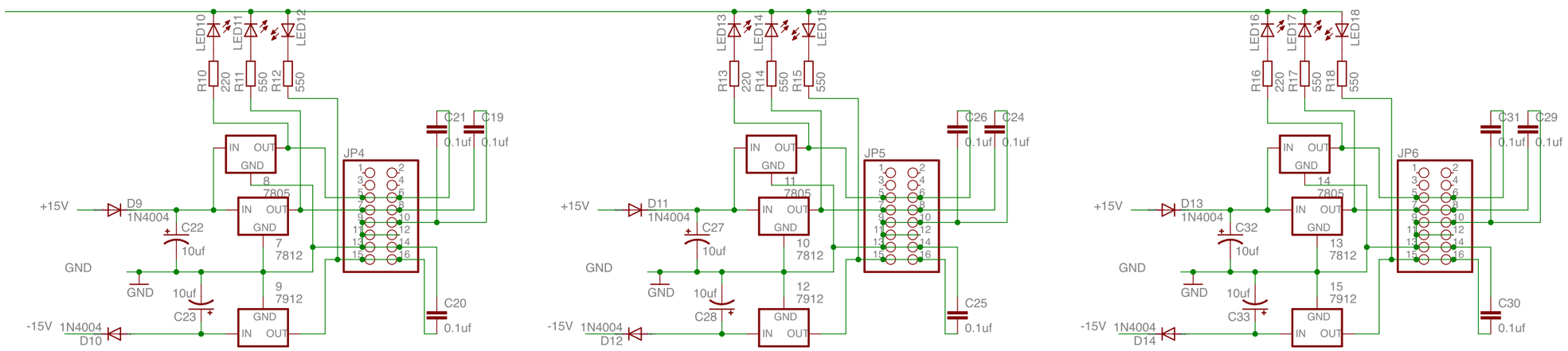
LED10
LED11
LED12
R10 220
R11 550
R12 550
IN OUT
GND
8
7805
7
7812
9
7912
JP4
C21 0.1uf
C19 0.1uf
C20 0.1uf
+15V
D9
1N4004
C22
10uf
GND
GND
10uf
C23
-15V
1N4004
D10
LED13
LED14
LED15
R13 220
R14 550
R15 550
11
7805
10
7812
12
7912
JP5
C26 0.1uf
C24 0.1uf
C25 0.1uf
+15V
D11
1N4004
C27
10uf
GND
GND
10uf
C28
-15V
1N4004
D12
LED16
LED17
LED18
R16 220
R17 550
R18 550
14
7805
13
7812
15
7912
JP6
C31 0.1uf
C29 0.1uf
C30 0.1uf
+15V
D13
1N4004
C32
10uf
GND
GND
10uf
C33
-15V
1N4004
D14