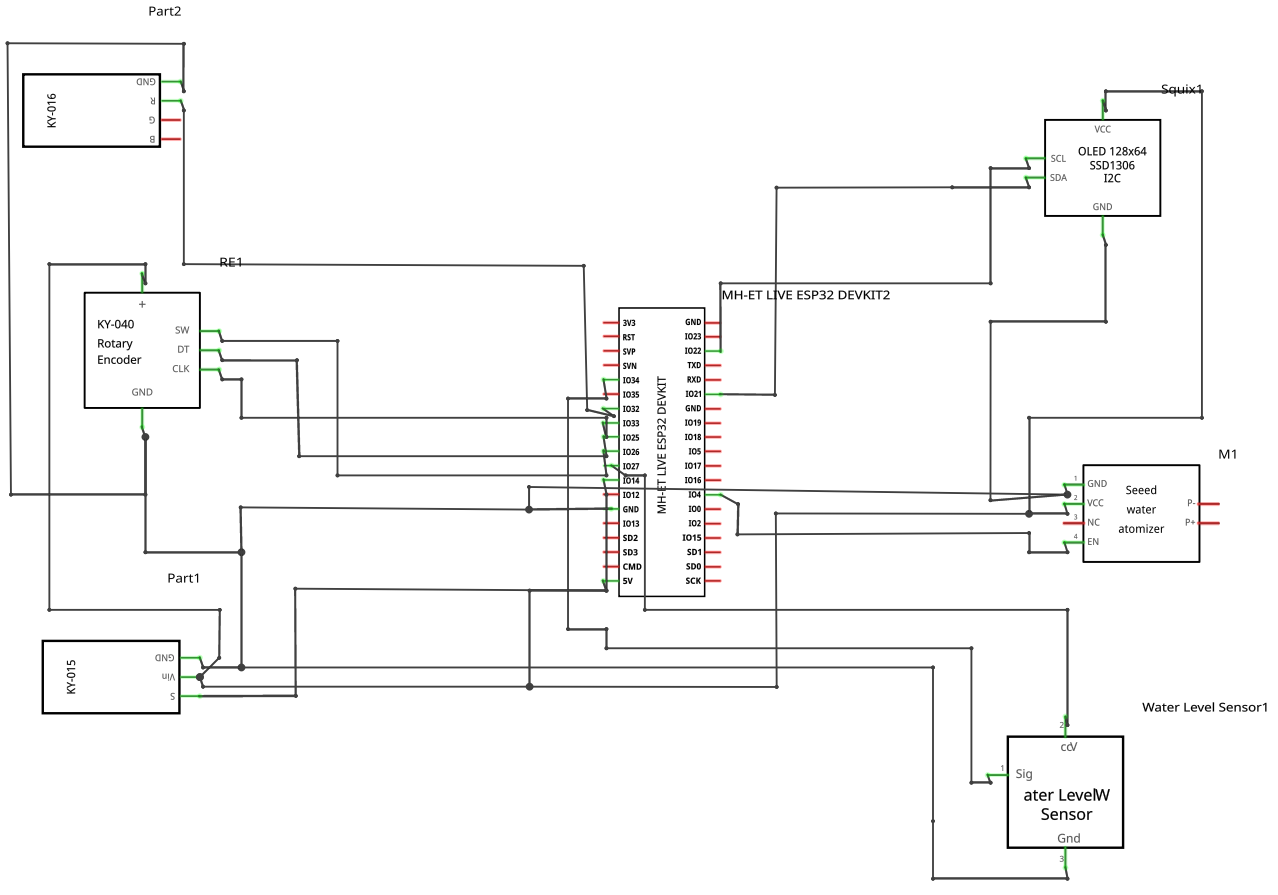
Part2
KY-016
GND
R
G
B
Squix1
VCC
OLED 128x64
SSD1306
I2C
SCL
SDA
GND
RE1
KY-040
Rotary
Encoder
SW
DT
CLK
GND
MH-ET LIVE ESP32 DEVKIT2
MH-ET LIVE ESP32 DEVKIT
3V3
RST
SVP
SVN
IO34
IO35
IO32
IO33
IO25
IO26
IO27
IO14
IO12
GND
IO13
SD2
SD3
CMD
5V
GND
IO23
IO22
TXD
RXD
IO21
GND
IO19
IO18
IO5
IO17
IO16
IO4
IO0
IO2
IO15
SD1
SD0
SCK
M1
GND
VCC
NC
EN
Seeed
water
atomizer
P-
P+
Part1
KY-015
GND
Vin
S
Water Level Sensor1
cc/
Sig
ater LeveW
Sensor
Gnd