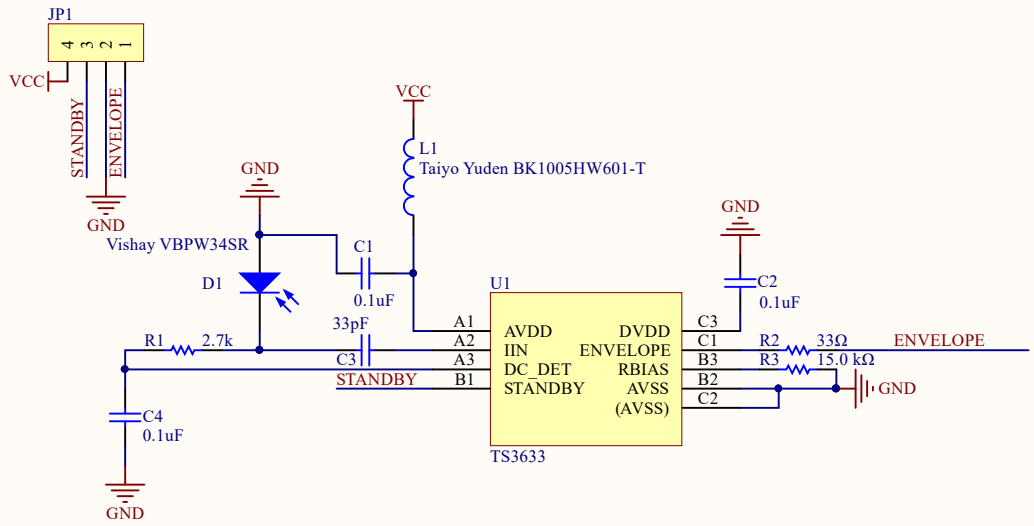

Title		
Size A4	Number	Revision
Date: 13/10/2016		Sheet of
File: SensorBoard.SchDoc		Drawn By: