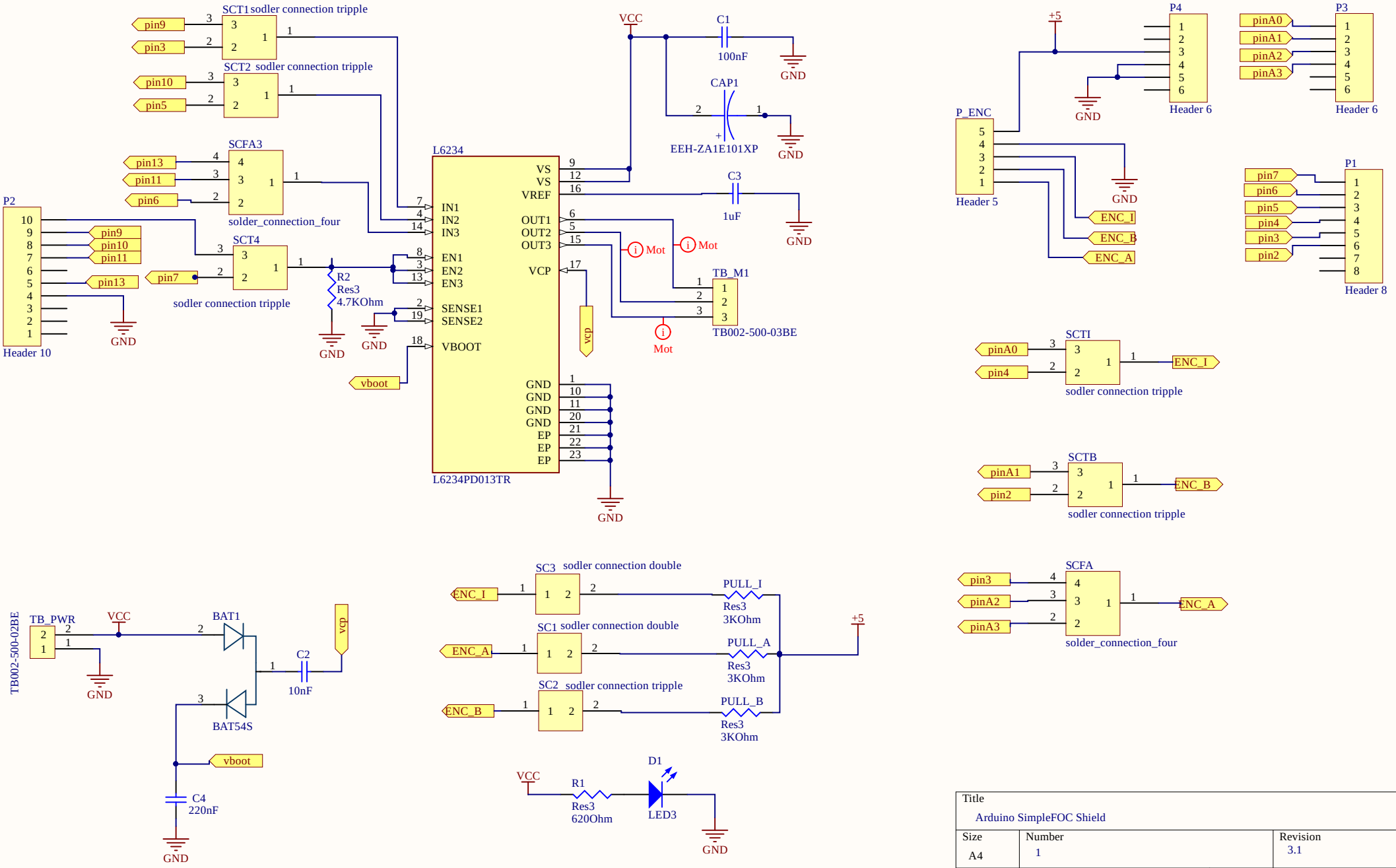

Title	Arduino SimpleFOC Shield	
Size A4	Number 1	Revision 3.1
Date: 21/09/2020	Sheet of	
File: C:\Users\..\ArduinoFOC.~(82).SchDoc	Drawn By:	