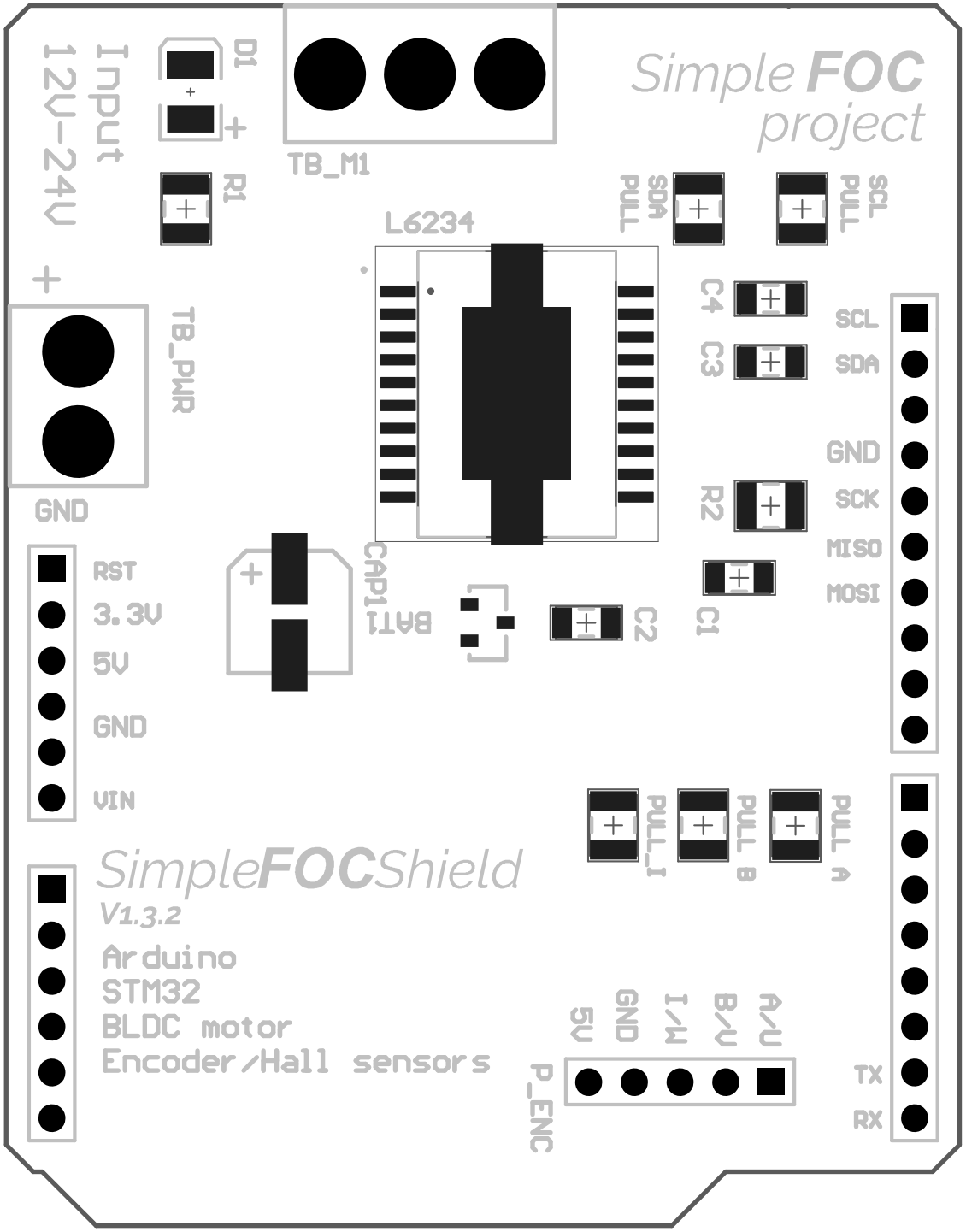
Simple FOC
project
Input
12V-24V
D1
R1
TB_M1
L6234
SDA
PULL
SCL
PULL
C4
C3
SCL
SDA
GND
SCK
MISO
MOSI
R2
C1
C2
TB_PWR
GND
RST
3.3V
5V
GND
VIN
CAP1
BAT1
PULL_I
PULL B
PULL A
SimpleFOCShield
V1.3.2
Arduino
STM32
BLDC motor
Encoder/Hall sensors
5V
GND
I/W
B/V
A/U
P_ENC
TX
RX

Hardware pin configuration
Solder to select
pin number
- L6234:
PWM & enable
- Encoder: A,B,I
Hall: U,V,W
pullups
Solder to
enable I2C
Pull SCL
Pull SDA
Solder to
enable pullups
Pull
A
Pull
B
Pull
I
enable
pwm A
pwm C
pwm B
Enc
A
Enc
B
Enc
I
A2
A3
A0
A1
3
2
4
3
7
8
9
11
13
6
5
10
+
+
+