DESIGN AND OPTIMIZATION OF COMPUTING APPROACHES IN V2G AND G2V-BASED EV CHARGING SYSTEMS

A PROJECT REPORT

submitted in partial fulfillment of the requirements

for the award of the degree of

BACHELOR OF TECHNOLOGY

in

ELECTRONICS AND COMPUTER ENGINEERING

by

RUPTANAY PAL 22BLC1388

under the guidance of

Dr. ARUL RAJAGOPALAN

SCHOOL OF ELECTRICAL ENGINEERING

VIT CHENNAI

ABSTRACT

This paper presents a novel intelligent-control strategy for the optimization of singlephase AC/DC and DC/DC bidirectional converters operating in vehicle-togrid(V2G) and grid-to-vehicle systems(G2V). V2G enables sustainable and smarter energy grids. With efficiency being paramount in applications of electric vehicle charging, this study focuses on incorporating evolutionary algorithms (EAs) and tuning it via PI controller. The proposed controller in our paper is PSO (Particle Swarm Optimization)-tuned-PI controller. Particle swarm optimization is chosen because of ease in programming and fast in convergence. The proposed strategy for increasing converter efficiency by using intelligent-control technique with PSO algorithm is used to improve the performance of the bidirectional converters by minimizing the overshoot, undershoot, settling time and rise time of the output voltage. A comparative study is conducted between the conventional tunning methods i.e. PI, PID, GA (genetic algorithm)-tuned-PI and the proposed PSO-tuned-PI controller. The performance of each controller is analyzed through MATLAB/Simulink software. Further, various error parameters such as ISE, IAE, ITAE as well as the overall settling time for each controller is observed. It was concluded that PSO-tuned-PI displayed the best results with a settling time of 4.415

μs as compared to GA-tuned-PI, PID and PI which displayed a settling time of 4.471

μs , 4.478 μs ,4.591 μs , respectively. PSO-tuned-PI also obtained best efficiency at 85.5 % along with its ISE, ITAE and IAE values as 102.3, 5.336 and 9.376 respectively.

TABLE OF CONTENTS

LIST OF TABLES vi
LIST OF FIGURES vii
ABBREVIATIONS AND NOMENCLATURE ix
CHAPTER I 1
1. INTRODUCTION 1
1.1 Introduction to V2G/G2V system 1
1.1 Motivation 2
1.2 Objectives 2
1.3 Organization of Thesis: - ..... 3 CHAPTER II 3
2. PROJECT DESCRIPTION..... 3
2.2.1 BLOCK DIAGRAM 3
2.2.2 CIRCUIT DIAGRAM 4
CHAPTER III 5
3. DESIGN OF V2G/G2V SYSTEM 5
3.1 INTRODUCTION TO DESIGN APPROACH 5
3.1.1 Design of LCL filter 5
..... 5
3.1.2 Design of Single-Phase AC/DC Bidirectional Converter 7
3.1.3 Design of DC-DC Bidirectional Buck-Boost converter 8
3.2 Controller analysis 9
CHAPTER IV 12
4. PROJECT DEMONSTRATION 12
4.1 INTRODUCTION to project demonstration 12
4.2 matlab/simulink circuit 13
4.3 SIMULATION RESULTS 14

4.4 RESULTS and discussion .....
22 CHAPTER V 23
5. CONCLUSION 23
REFERENCES 23
PUBLICATIONS BASED ON THESIS 25
APPENDICES 25
Appendix 1: PSO CODE 25

LIST OF TABLES

TABLE 1 PSO PARAMETERS

TABLE 2 SIMULATION PARAMETERS

TABLE 3 PARAMETERS OF ALL CONTROLLERS

TABLE 4 PERFORMANCE OF ALL CONTROLLERS

TABLE 5 EFFICIENCY COMPARISON OF ALL CONTROLLERS

LIST OF FIGURES

FIGURE 1 BLOCK DIAGRAM OF PROPOSED V2G/G2V DESIGN

FIGURE 2 SCHEMATIC DIAGRAM OF V2G/G2V SYSTEM

FIGURE 3 SCHEMATIC OF LCL FILTER

FIGURE 4 FLOWCHART OF OPTIMIZATION PROCESS OF THE GA TUNED-PI-CONTROLLER

FIGURE 5 FLOWCHART OF PSO-TUNED-PI CONTROLLER

FIGURE 6 MATLAB/SIMULINK CIRCUIT OF PROPOSED SYSTEM

FIGURE 7 VOLTAGE AND CURRENT WAVEFORM OF GRID SIDE DISCHARGING (V2G) MODE USING PI CONTROLLER

FIGURE 8 CURRENT AND VOLTAGE WAVEFORM OF BATTERY DISCHARGING (V2G) USING PI CONTROLLER

FIGURE 9 VOLTAGE AND CURRENT WAVEFORM OF GRID SIDE CHARGING (G2V) MODE USING PI CONTROLLER

FIGURE 10 CURRENT AND VOLTAGE WAVEFORM OF BATTERY CHARGING (G2V) USING PI CONTROLLER

FIGURE 11 VOLTAGE AND CURRENT WAVEFORM OF GRID SIDE DISCHARGING (V2G) MODE USING PID CONTROLLER

FIGURE 12 CURRENT AND VOLTAGE WAVEFORM OF BATTERY DISCHARGING (V2G) USING PID CONTROLLER

FIGURE 13 VOLTAGE AND CURRENT WAVEFORM OF GRID SIDE CHARGING (G2V) MODE USING PID CONTROLLER

FIGURE 14 CURRENT AND VOLTAGE WAVEFORM OF BATTERY CHARGING (G2V) USING PID CONTROLLER

FIGURE 15 VOLTAGE AND CURRENT WAVEFORM OF GRID SIDE DISCHARGING (V2G) MODE USING GA-TUNED-PI CONTROLLER

FIGURE 16 CURRENT AND VOLTAGE WAVEFORM OF BATTERY DISCHARGING (V2G) USING GA-TUNED-PI CONTROLLER

FIGURE 17 VOLTAGE AND CURRENT WAVEFORM OF GRID SIDE DISCHARGING (V2G) MODE USING GA-TUNED-PI CONTROLLER

FIGURE 18 CURRENT AND VOLTAGE WAVEFORM OF BATTERY CHARGING (G2V) USING GA-TUNED-PI CONTROLLER

FIGURE 19 VOLTAGE AND CURRENT WAVEFORM OF GRID SIDE DISCHARGING (V2G) MODE USING PSO-TUNED-PI CONTROLLER

FIGURE 20 CURRENT AND VOLTAGE WAVEFORM OF BATTERY

DISCHARGING (V2G) USING PSO-TUNED-PI CONTROLLER

FIGURE 21 VOLTAGE AND CURRENT WAVEFORM OF GRID SIDE

CHARGING (G2V) MODE USING PSO-TUNED-PI CONTROLLER

FIGURE 22 CURRENT AND VOLTAGE WAVEFORM OF BATTERY

CHARGING (G2V) USING PSO-TUNED-PI CONTROLLER

ABBREVIATIONS AND NOMENCLATURE

V2G Vehicle to Grid G2V
Grid to Vehicle

PSO Particle Swarm Optimization

GA Genetic Algorithm

PI Proportional Integral
PID Proportional Integral Derivative

EA Evolutionary Algorithms

ISE Integral Square Error

IAE Integral Absolute Error

ITAE Integral of Time-weighted Absolute Error

CHAPTER I

1. INTRODUCTION

1.1 Introduction to V2G/G2V system

In contribution to advancing towards a more sustainable mode of transportation, the use of electric vehicles (EVs) has shown to stand a true contender. Moreover, its capabilities as a grid power buffering energy storage device paves way for more advanced application [1]. With personal transportation being the most preferred form of transportation, it is observed that EVs are being left for parking for above 20 hours per day. As a result, they prove to be valuable in applications that facilitate the storage of additional electricity (G2V) and during intervals of high demand, its transmission of electricity back to the grid (V2G) [2]. Another improvisation of V2G is called V2H wherein the storage of energy present in home UPS system are used in place of vehicle batteries [3]. EVs can broadly be classified into two categories i.e. on-board or off board types depending on the power levels. Typically, on board chargers with single phase supply for power levels up to (3 6Kw) are preferred [4]. the chargers designed specifically for V2G application incorporate advantages such as voltage support, reactive power compensations, harmonic filtering, power factor regulation, load balancing, peak shaving etc. with its most important feature being that in the light of a grid failure that charger should support energy feedback from vehicle battery enabling vehicle-to-home (V2H) or vehicle-to-any load (V2X) [5]. In a V2G system power converter technique is one of the most researched fields, particularly the on-board type, requires features such as high efficiency, high power density, good power factor, low harmonic distortion, and electrical isolation. To support bidirectional energy exchange between the grid and an electric vehicle, the AC-DC converter must allow power flow in both directions. Typically, the bidirectional converter in a V2G setup is designed with a two-stage architecture consisting of an AC-DC stage and a DC-DC stage [6-8]. Real time applications that involve bidirectional converters are in need of necessary control techniques [9-11]. It is important to choose an appropriate control method for bidirectional converters which in turn depend on the various topologies and control challenges that arise in practical scenarios. During every mode of operation, the inductor current of the buck-boost converter is continuously compared with the reference value, and the PI controller produces the switching signals for the converter's switches according to the active mode. While in AC/DC bidirectional converter the PI controller uses a dual loop control method. It uses inputs of the reference voltage and error which then generates the control signal for the inner current control group the output current control is taken as reference.

1.1 Motivation

At present many attempts have been made to tune PID controller parameters with various EAs such as genetic algorithm (GA), covariance matrix adaptation evolution strategy (CMAES), particle swarm optimization (PSO), differential evolution (DE), tribe's algorithm (TA), ant colony optimization (ACO), and discrete binary particle swarm optimization (DBPSO) . It is no doubt that AI-based computational techniques can provide the best and optimal sets of controller gains based on a given function in an iterative manner from the many possible solutions that result in the best value [12]. Adaptive methods such as Artificial Neural Networks (ANNs) and fuzzy logic have been explored to allow controller gains to change dynamically, but these methods require time-consuming offline training or developing inference rules, which can hinder real-time adaptation [13]. The principle of real-time gain tuning using PSO can be directly applied to bidirectional AC/DC converters, such as those used in V2G systems or energy storage interfaces. Instead of just regulating voltage, both current and voltage on either side of the converter must be controlled efficiently under variable operating conditions [14]. This thesis focuses on implementing AI-based computational tunning for single phase bidirectional converters and compare the obtained results with results obtained using conventional linear controllers.

1.2 Objectives

This paper focuses on implementing AI-based computational tunning for single phase bidirectional converters and compare the obtained results with results obtained using conventional linear controllers. In order to implement Here, the goals of this approach follow;

- Devise a block diagram and component analysis for our proposed V2G/G2V system
- Mathematical modeling design of the single-phase bidirectional converter
- Design of LCL Filter
- Design of Single-Phase AC/DC Bidirectional Converter
- Design of DC-DC Bidirectional Buck-Boost converter
- Controller analysis
- Proportional-Integral (PI) controller
- Proportional-Integral-Derivative (PID) controller
- Genetic Algorithm-tuned-PI controller
- PSO-Tuned-PI controller
- Simulating all circuits on MATLAB Simulink
- Comparison of person between all controllers
- Hardware analysis to verify results

1.3 Organization of Thesis: -

This thesis comprises of eight chapters with introduction in the first. Second chapter deals with the block diagram including component analysis. chapter three contains a detailed mathematical modelling and design of bidirectional converters, LCL filter furthermore, an understanding of each of the four controllers employed in the system. Chapter four deals with the simulation using MATLAB Simulink to analyze the performance of each controller for the bidirectional converters, it is supported with graphical outputs and comparison tables with error parameters, as well as efficiency performance of each controller. Finally, Chapter five gives a thorough conclusion for the thesis.

CHAPTER II

2. PROJECT DESCRIPTION

2.2. INTRODUCTION TO PROJECT DESCRIPTION WITH BLOCK DIAGRAM

The proposed Grid-to-Vehicle (G2V) and Vehicle-to-grid system is designed to facilitate efficient and controlled charging of Electric Vehicles (EVs) using a bidirectional converter interface respectively. The system not only enables gridtobattery charging but also allows power flow reversal for Vehicle-to-Grid (V2G) operation, contributing to smart grid integration. The below block diagram gives a thorough analysis of all the components used in the system.

2.2.1 BLOCK DIAGRAM

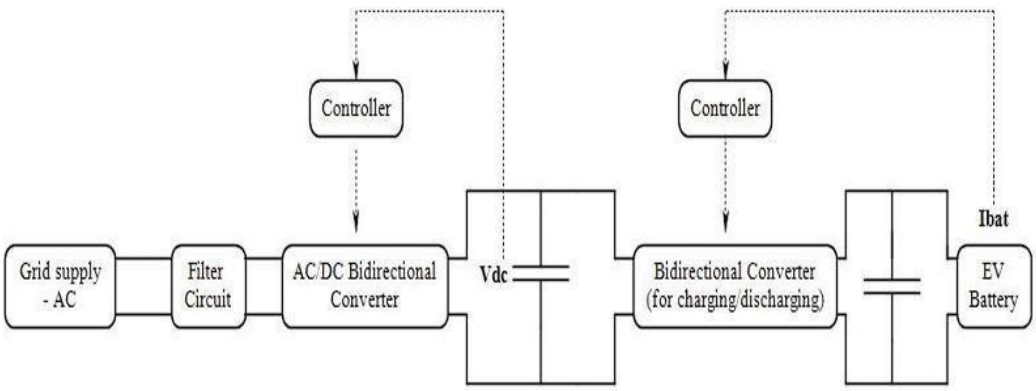

Figure 1: Block diagram of proposed V2G/G2V design

Fig 1 consists of the key components of our proposed system: single phase AC grid, LCL filter, bidirectional AC/DC converter, bidirectional DC/DC converter and a battery storage system. During G2V, grid voltage is fed to the LCL filter. The filter is responsible for reducing current at the grid side which results in the reduction of total harmonic distortion levels. The AC power is then supplied to the AC/DC bidirectional converter which acts as a rectifier. The proposed topology used for the bidirectional converter is the H bridge converter as the front-end. A DC bus capacitor has been placed between the converters in order to filter any ripples and stabilizes the voltage. The DC/DC bidirectional converter is a non-isolated buck-boost converter that works as a buck converter during G2V. Finally, the power is stored through the vehicle battery storage system. During the V2G the power stored within the battery is passed through the DC/DC bidirectional converter which acts as a boost converter. The output power is then sent to the H bridge bidirectional converter which acts as an inverter supplying the AC power back to the grid.

2.2.2 CIRCUIT DIAGRAM

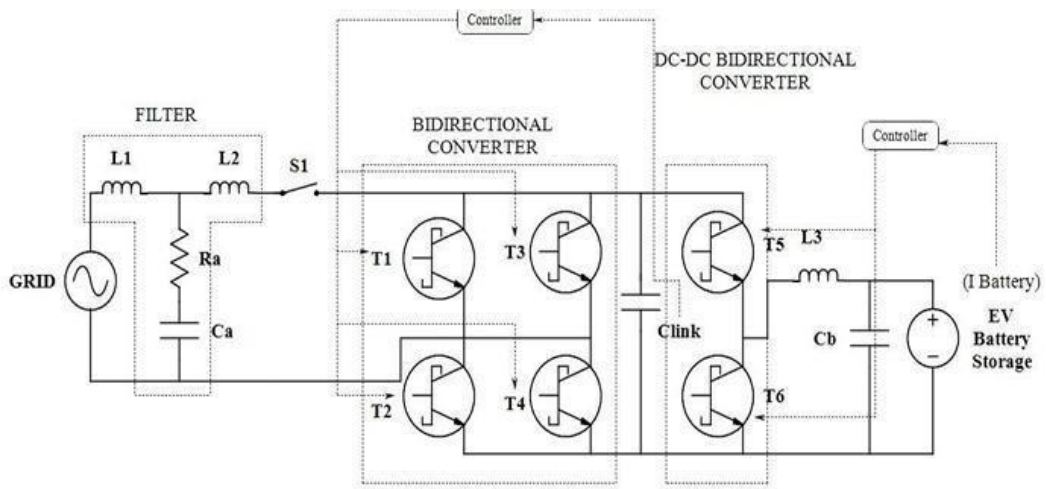

Figure 2: Schematic diagram of the V2G/G2V system

In the proposed model, the energy which is stored in the battery of the EV is fed back to the grid showcases the V2G operation. An IGBT-based full-bridge Bidirectional converter is coupled with a non-isolated buck-boost Bidirectional DC-DC converter which is connected though a common DC link capacitor. The Buck-Boost converter which is used for charging and discharging operation is represented by Fig 2. When the DC bus voltage is higher as compared to battery voltage and the converter operates in buck mode. The control is provided by varying the duty cycle and generating Pulse Width Modulation (PWM) which controls the charging current in buck mode [15].

CHAPTER III

3. DESIGN OF V2G/G2V SYSTEM

3.1 INTRODUCTION TO DESIGN APPROACH

Our proposed V2G/G2V design utilizes a bidirectional DC–DC converter and gridtied AC/DC bidirectional converter to enable both efficient charging from the grid and potential reverse power flow when needed. The system employs fast voltage and current control loops for stable operation. Secure communication protocols ensure coordinated operation with the grid, while built-in protection circuits enhance system safety. The design emphasizes high efficiency, minimal harmonic distortion, and reliable bidirectional power transfer for smooth and optimized G2V and V2G performance.

3.1.1 Design of LCL filter

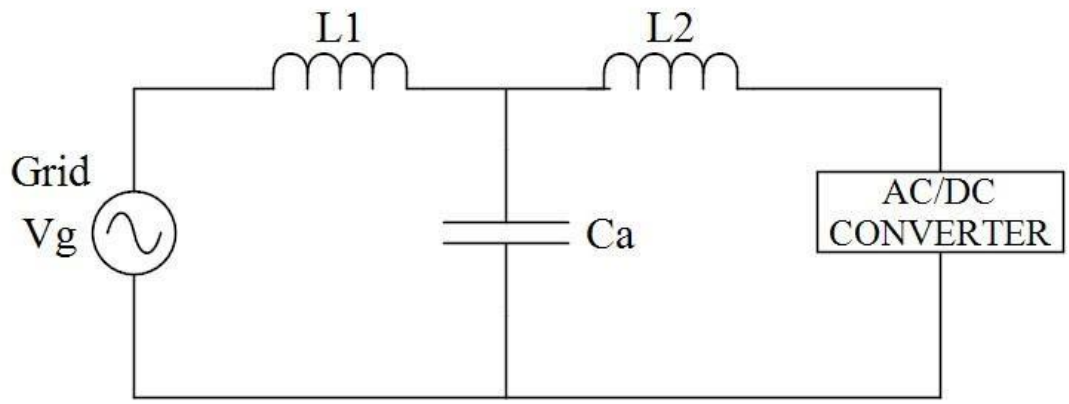

Figure 3: Topology of the LCL filter

Figure 2 illustrates the schematic diagram of the proposed topology of the LCL Filter. The LCL Filter works in the V2G mode to reduce the current supplied to the gird and further reduce the Total harmonic distortion. The corresponding Transfer Function is derived and denoted by the equation (1).

$$\frac{i_s(s)}{v_{s1}(s)} = \frac{1 + L_1 L_2 C_a s^2}{L_1 L_2 C_a s^3 + (L_1 + L_2)s} \quad (1)$$

Where, $i_s(s)$ and $v_{s1}(s)$ denote the input current and Source voltage in the Laplace

L_1 L_2

domain. denotes the grid-side filter inductance while denotes the filter C^a inductance present on the AC/DC converter side. The filter capacitance is given by

s s $j\omega$

. Here denotes the Laplace operator (=).

The design of the capacitor present in the filter is done in such a way that the reactive power absorbed is limited to 5 percent of the total complex power. This is done to avoid the injection of excessive reactive power in the grid. This is denoted by the equation (2).

V_2

$$Q_p = \frac{\frac{V_g}{1}}{2\pi f C_{sa}} = 5\% \cdot S_p \quad (2)$$

Q^p represents the reactive power absorbed by the system. The value of this Here depends on the value of the grid voltage, switching frequence and the filter

V^g. S^p denotes the total complex power of capacitance. The grid voltage is given by the system helps in calculating the filter capacitance. The switching frequency of the

f^s. system

is denoted by

Using the equation (2), the filter capacitance is derived and expressed in the equations (3) and (4), respectively. $V_{g2} \cdot 2\pi f$

$$C_{sa} = 5\% \cdot S_p \quad (3)$$

$$C_a = \frac{0.05 \cdot S_p}{V_g^2 \cdot 2\pi f_s} \quad (4)$$

The voltage drop across the overall inductance of the LCL filter is given by the equation (5)

$$V_{(L_1+L_2)} = i \cdot X_{(L_1+L_2)} = i \cdot 2\pi f_s (L_1 + L_2) \quad (5)$$

L^1(grid0side filter inductance) and

Here the voltage drop across the series inductors

L_2(converter side filter inductance) is given by $V_{(L_1+L_2)}$. Equation (5) states that the voltage drop across the inductor is equal to the line current flowing through the filter i multiplied with the total reactance where the line current is denoted by and the total reactance is given by $X_{(L_1+L_2)}$.

In order to ensure that the inductors are not too large to prevent excessive voltage drop and further reduce the efficiency of the system, the voltage drop across the total inductance is limited to 10 percent of the grid voltage. This relation is expressed by the equation (6). $i \cdot 2 \cdot f_s \cdot (L_1 + L_2) = 10\% \cdot V_g$ (6)

The total inductance $L^1 + L^2$ is further derived by solving equation (5) at the

$$i = \frac{s}{f^s}$$

. Current I is substituted in equation (6) as V^g, where s is switching frequency

the apparent power rating of the converter and the total series inductance of the filter is derived and given by equations (7) and (8).

$$(L_1 + L_2) = \frac{0.1 \cdot V^g}{s \cdot V_g \cdot 2 \cdot f_s} \quad (7)$$

$$(L_1 + L_2) = \frac{0.1 \cdot V_g^2}{s \cdot 2 \cdot f_s} \quad (8)$$

3.1.2 Design of Single-Phase AC/DC Bidirectional Converter

For the transfer of energy in V2G and G2V mode a coupling is set up between the grid side and the converter side. The nature of the grid voltage is sinusoidal and is expressed by the equation (9). $v_{inst} = sqrt(2) \cdot v_{rms} \sin(\omega t_1)$ (9) v^{inst} represents the instantaneous value of the grid voltage at any time t^1 that Where,

v^{rms} denotes the rated RMS grid voltage

serves as an input to the AC/DC converter. which when multiplied by the square root of 2 gives the peak value of the sinusoidal grid voltage. Here, $\sin(\omega t_1)$ denotes the time-varying sinusoidal function which is at

angular frequency of $\omega = 2\pi f_g$, where f_g represents the frequency of the grid. an

The relation between the fundamental component of the AC-side converter voltage is expressed by equation (10). $v_{conv}(t_2) = 2V_{conv}\sin(\omega t_2 - \theta)$ (10)

Where, V_{conv} denotes the RMS value of the output voltage of the converter and represents the phase angle of the converter voltage with respect to that of the gird. The grid-side instantaneous current is given by the equation (11). $i_{grid}(t_3) = 2I_{grid}\sin(\omega t_3 - \phi)$ (11) I_{grid} denotes the RMS value of the grid current while ϕ indicates the phase angle Here, of the grid current with respect to the value of grid voltage.

To calculate the grid inductance the relationship between RMS grid voltage and grid current is used. This can be expressed by:

$$v_{rms2} + (i_{rms2} + X_{ind2}) = v_{conv2} \quad (12)$$

v_{rms} and i_{rms} denote RMS grid voltage and RMS grid current respectively. X_{ind} Where represents the inductive reactance of the inductor filter. Using this equation the gridside inductance is derived.

The DC-link capacitor used to stabilize the DC bus voltage is calculated based upon

i_{link}, the voltage across the DC link which is the current flowing through the DC link

v_{link}, this voltage is not steady but it fluctuates around its average value. This given by relation is expressed by the equation (13).

$$C_b = \frac{i_{link}}{2\omega v_{link}} \quad (13)$$

In the equation (13) the value of i_{link} is derived by $i_{link} = \frac{P_{link}}{v_{link}}$. The required DC link

$_b$. represents the angular frequency of the grid given by

C

capacitance is given by

$=2 f_g$.

3.1.3 Design of DC-DC Bidirectional Buck-Boost converter

When the DC bus voltage is higher as compared to the voltage of the battery the converter operates in buck mode. This control is provided by varying the Pulse Width Modulation (PWM) duty ratio which controls the charging current in buck mode [2]. The source voltage for the converter is the DC link voltage**.**
During the buck mode of operation, the output voltage at the battery side is given by (14).

$$v_{battery} = v_{link} D \quad (14)$$

Whie for the boost operation the output voltage at the battery side is given by (15).

$$v_{battery} = v_{link} -(1 D) \quad (15)$$

D $v^{battery}$

Where ‘ ’ denotes the duty ratio of the converter and denotes the output(batteryside) voltage.

The overall inductance of the bidirectional DC-DC converter can be calculated as

$$L_{bc} = \frac{v_{battery} -(1 D)}{I_{ripple} f_{conv}} \quad (16)$$

L^{bc} indicates the inductance of the converter inductor. I^{ripple} is the peaktoWhere,

f^{conv} denoted the switching frequency peak ripple current present in the inductor while of the converter.

I^{ripple} in the equation (16) is expressed as: The current ripple of the inductor

$$I_{ripple} = \frac{v_{in} - v_{out}}{L_{bc} f_{conv}} D \quad (17)$$

The Autonomous Slot-car system will consist of a special car, sensors on the track and computer control software. It will provide a range of features to enhance the single player experience of a Scalextric product. It will be able to race competitively against the customer at various difficulty levels

3.2 CONTROLLER ANALYSIS

Proportional-Integral (PI) controller:
A Proportional-Integral (PI) controller regulates the output of the bidirectional DC-DC converter by continuously adjusting the duty cycle signal from the error between the reference duty cycle and actual duty cycle. It offers good setpoint tracking and disturbance rejection by combining proportional and integral control, thus reducing the steady-state error. In a buck-boost topology.

$$v\,x(\,)=K_{p1}\,\epsilon(\,)x\;K+\;{}_{i1}\int_{0}^{x}\epsilon(\,)m\;dm \qquad (18)$$

Where, $v\,x(\,)$ represents the output of the controller, K_{p1} and K_{i1} represent the proportional gain and integral gain constant respectively while $\epsilon(\,)x$ denotes the error signal.

Proportional-Integral-Derivative (PID) controller:
The Proportional-Integral-Derivative (PID) controller further improves the dynamic performance of the system by adding a derivative term. This helps in anticipating and continuously adjusting changes in the error signal. This allows for a faster settling and reduced overshoot during transient events which serves essential for the bidirectional converter used in our proposed design.

$$v\,x(\,)=K_{p1}\,\epsilon(\,)x\;K+\;{}_{i1}\int_{0}^{x}\epsilon(\,)m\;dm\;K\;\frac{d\,x\,\epsilon(\,)}{dx}+\;{}_{d1} \qquad (19)$$

equation (18) and (19) represents the output of a Proportional–Integral (PI) and PID $v\,x(\,)$ controller. In this expression, denotes the controller's output signal sent to the system. The term $\epsilon(\,)x$ is the error signal at any time x, defined as the difference between the desired setpoint and the actual process variable. K_{p1} is the proportional gain, which determines how strongly the controller responds to the current error, while

K_{i1} is the integral gain, which dictates the controller's reaction to the accumulated

x

$\int_0^x (\ )m\ dm$

K^{d1} is the differential gain. The integral term dt represents error over time.

the total accumulated error up to time m, and m is simply the time variable. Together, these terms allow the controller to correct both present and past errors to improve system stability and performance.

PSO-Tuned-PI controller:

Particle swarm optimization is a computational algorithm that mimics the social behaviour of animal groups like a flock of birds or a school of fish to find the optimal solution to complex problems. In nature, a bird's observable vicinity is generally limited to some range. Logically, having more than one bird allows all the birds in a swarm to be alert of the bigger surface of fitness function. The population is a collection of a predetermined number of particles. Each particle corresponds to a particular function to the problem. The particles constantly search space while simultaneously changing velocity until its position ceases to satisfy the criterion. During its search each particle flies around within the search space accordingly i.e. the particle remembers the previous experience of itself as well as of the other particles. Hence in PSO the algorithm is responsible for keeping record of one's own position as well as the position of its neighbour. The best position obtained by each particle

X^{pbest} and best velocity/solution is called J^{pbest}

during the course of its search is called

J^{pbest} is set to J^{pbest} and the particle associated .

Initially the global best is denoted by

X^{best}. As the search continues the particles and corresponding with it is denoted by solutions are also obtained.

Parameter	Value
Max Iterations	100
Max Weight	1
Min Weight	0.1
Swarm Population Size	15
C1	2

C2	2

Table 1 PSO parameters

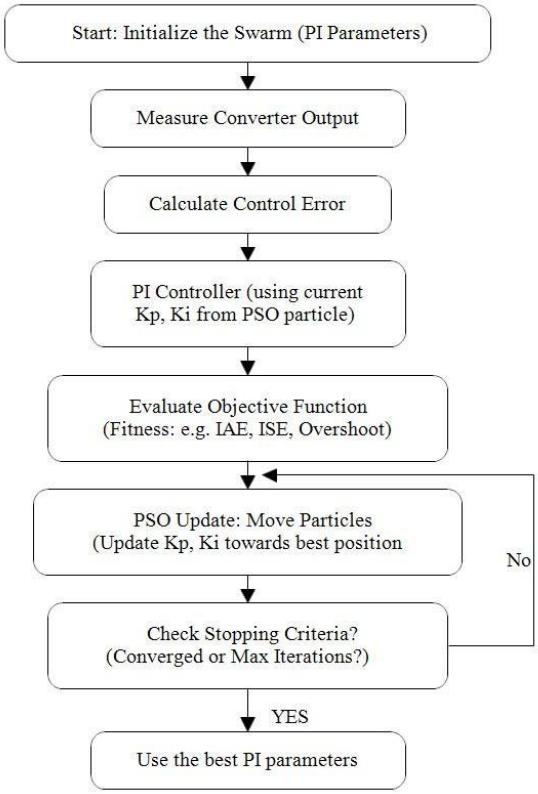

Fig 4: Flowchart of the optimization process of the PSO-tuned-PI controller

Genetic Algorithm-tuned-PI

Genetic algorithm (GA) is a metaheuristic optimization algorithm inspired by the process of natural selection that comes under a larger class of evolutionary algorithm (EA). It works by iteratively evolving a population of candidate solutions of an optimization problem. It does this through the process of selection, cross-over and mutation in order to find the best solution to summarize the algorithm, the outline is provided below:

1. The algorithm initiates by creating a random initial population.
2. In each generation, every individual in the population is evaluated to determine its raw fitness score.
3. These fitness scores are scaled to create expectation values for selection purposes.
4. Individuals are chosen as parents based on their expectation values.
5. Some of the best-performing individuals, called elites, are directly carried over to the next generation.
6. Offspring are created from the parents by either introducing random changes (mutation) or by combining parts from two parents (crossover).
7. The new set of the offspring replaces its previous population to form the future or next generation.
8. This cycle stops when a stopping condition is met.
9. The algorithm adjusts certain steps when handling linear or integer constraints

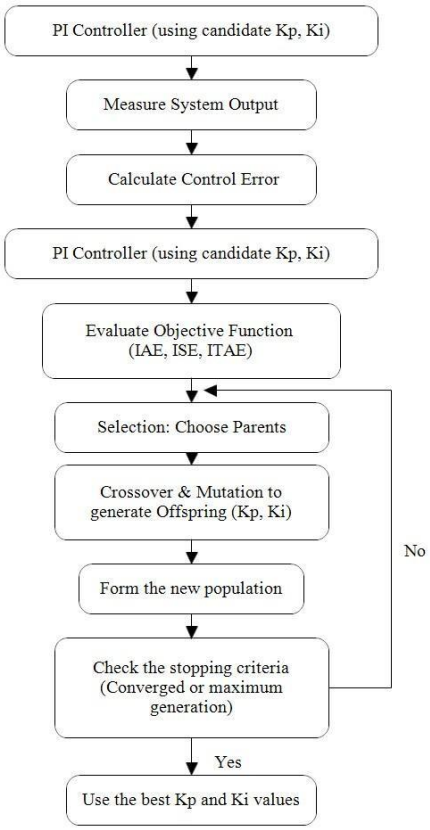

Fig 5: Flowchart of the optimization process of the GA-tuned-PI controller

In this paper, Genetic Algorithm has been effectively implemented in tuning the pi controller parameters by encoding the PI gains i.e. Kp and Ki as variables to be optimized. As previously discussed, GA starts by generating a random population with random Kp and Ki values each combination is evaluated using an objective function. The objective function chosen for our model is the integral time absolute error (ITAE). Through the GA operation of selection, crossover and mutation the algorithm searches for optimal PI parameters that minimizes the objective function. As a result, the best performing Kp and Ki values found by GA are then used for the PI controller. This ensures an improved tracking and disturbance rejection compared to conventional tuning approaches.

CHAPTER IV

4. PROJECT DEMONSTRATION

4.1 INTRODUCTION TO PROJECT DEMONSTRATION

To implement the proposed V2G/G2V system the circuit was implemented using MATLAB/Simulink. Our main objective is to ensure the voltage stability and error parameters for the two bidirectional converters used within our system. The setup

consists of an AC Mains, an LCL filter, bidirectional AC/DC converter that is using as a rectifier during G2V and an inverter during V2G power flow. The performance of each controller is analyzed through MATLAB/Simulink software. Further, various error parameters such as ISE, IAE, ITAE as well as the overall settling time for each controller is observed.

4.2 MATLAB/SIMULINK CIRCUIT

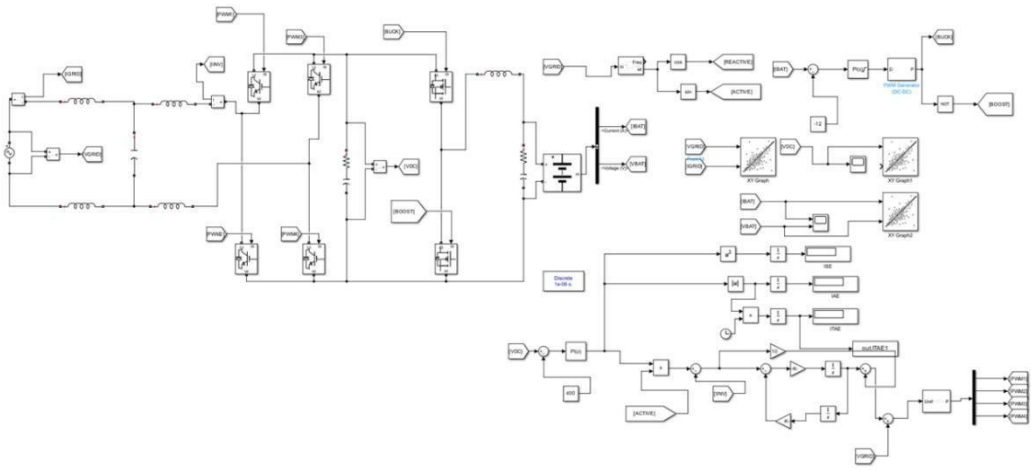

Fig 6: MATLAB/Simulink circuit of proposed system.

Table 2:

PARAMETERS	VALUES
L_1, L_2	2.18 mH, 2.03mH
C_a	6.23uF
V_g (Vpeak)	325V, 50Hz
C_b	100uF
C_{link}	5600uF

Specifications of the model developed

The MATLAB circuit as displayed in fig 6 shows the overall closed-loop circuit diagram for V2G and G2V system. The circuit contains an AC voltage source which is then connected to an LCL filter. The AC/DC bidirectional converter is designed using four IGBT switches while the DC/DC bidirectional converter makes use of two MOSFET switches. The PI, PID as well as PSO-tuned-PI and GA-tuned-PI is incorporated for the AC/DC and DC/DC bidirectional converter. The objective function for the PSO and GA algorithms are the respective PI parameters i.e. Kp and Ki values. Iteration for each value is computed to find the best value. From this circuit we analyze the graphical outputs during conduction in both directions namely the V2G as well as G2V.

4.3 SIMULATION RESULTS

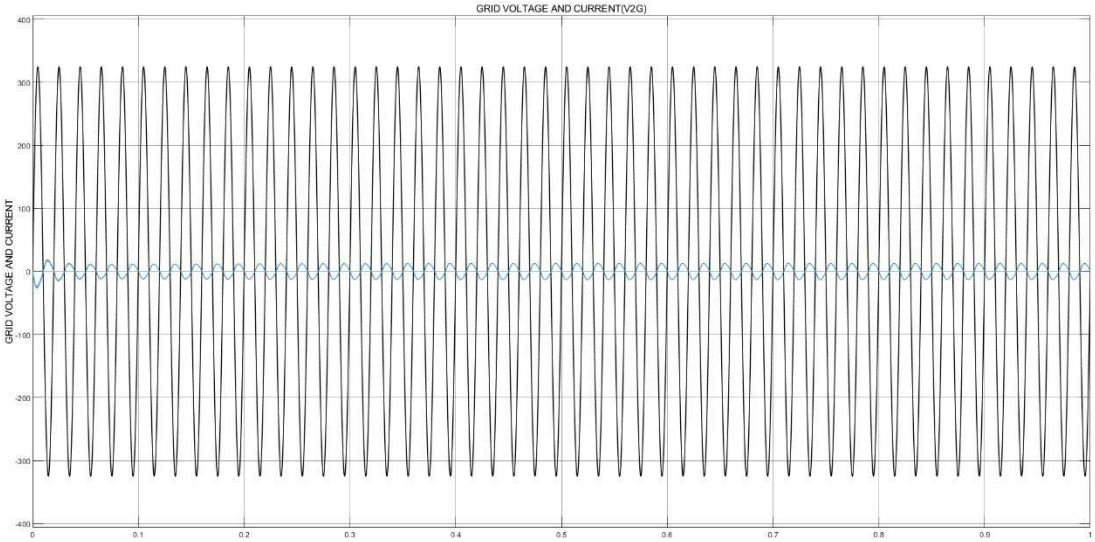

Fig 7: Voltage and current waveform of grid side discharging (V2G) mode using PI controller

The graph shown in Fig7 displays the grid side voltage and current during V2G when PI controller is implemented for both the bidirectional converters. The grid side voltage and current display a sinusoidal wave with peak magnitude of 325V and 12.68A respectively. The voltage and current signals appear to be out of phase which also serves as a confirmation of the direction in which the power is flowing.

Fig 8: Current and Voltage waveform of battery discharging mode (V2G) using PI controller.

The graph in fig 8 shows the current and voltage output of the battery during discharging mode when the PI controller is implemented. The voltage and current show a steady state output of 172.12V and 12.13A respectively.

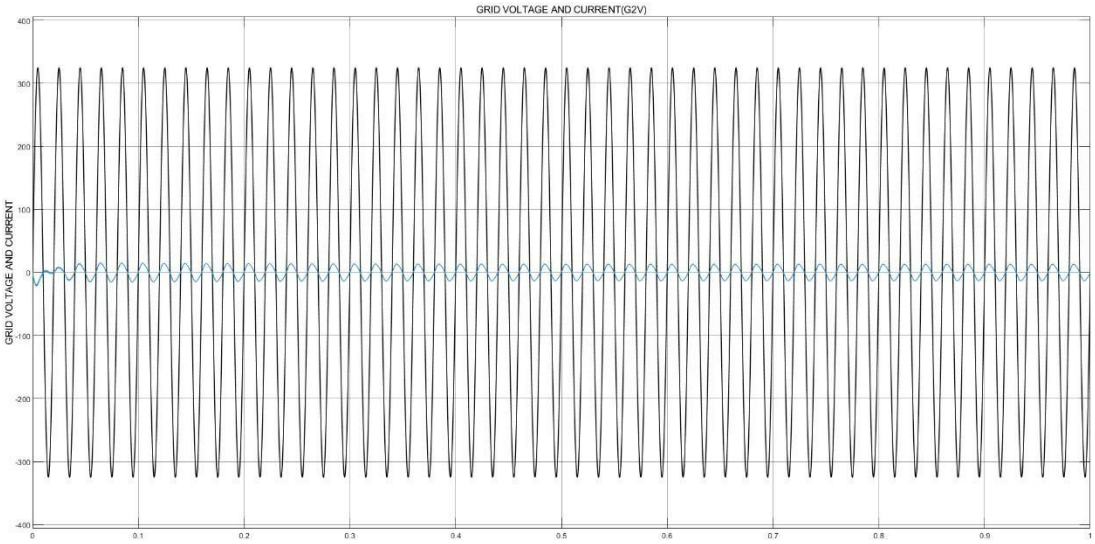

Fig 9: Voltage and current waveform of grid side charging (G2V) mode using PI controller

The graph shown in Fig9 displays the grid side voltage and current during G2V when PI controller is implemented for both the bidirectional converters. The grid side voltage and current display a sinusoidal wave with peak magnitude of 325V and 12.65A respectively. The voltage and current signals appear to be in phase which also serves as a confirmation of the direction in which the power is flowing.

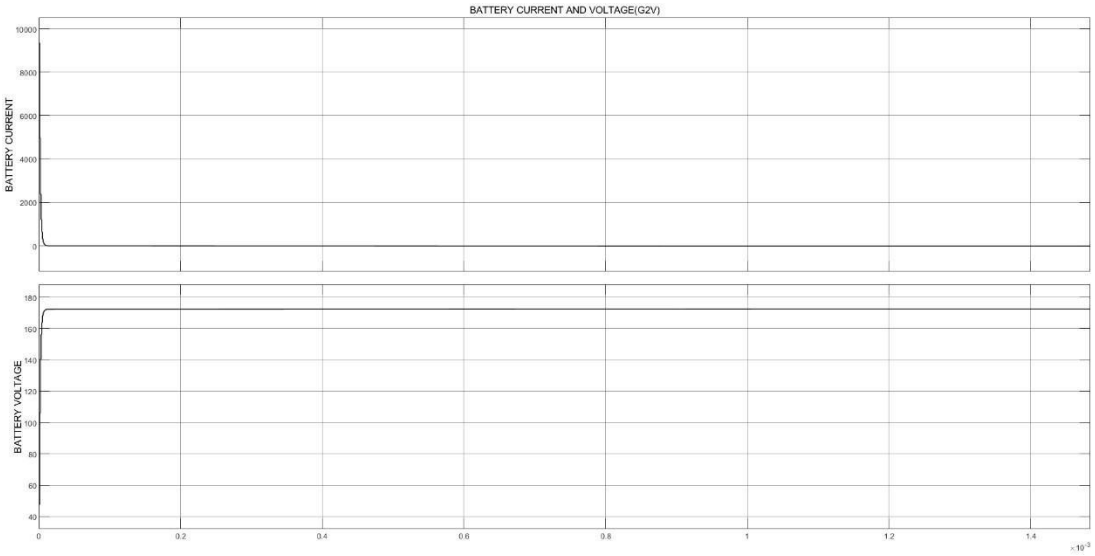

Fig 10: Current and Voltage of the battery charging mode (G2V) using PI controller.

The graph in fig 10 shows the current and voltage output of the battery during discharging mode when the PI controller is implemented during G2V power flow. The voltage and current show a steady state output of 172.64V and 11.60A respectively.

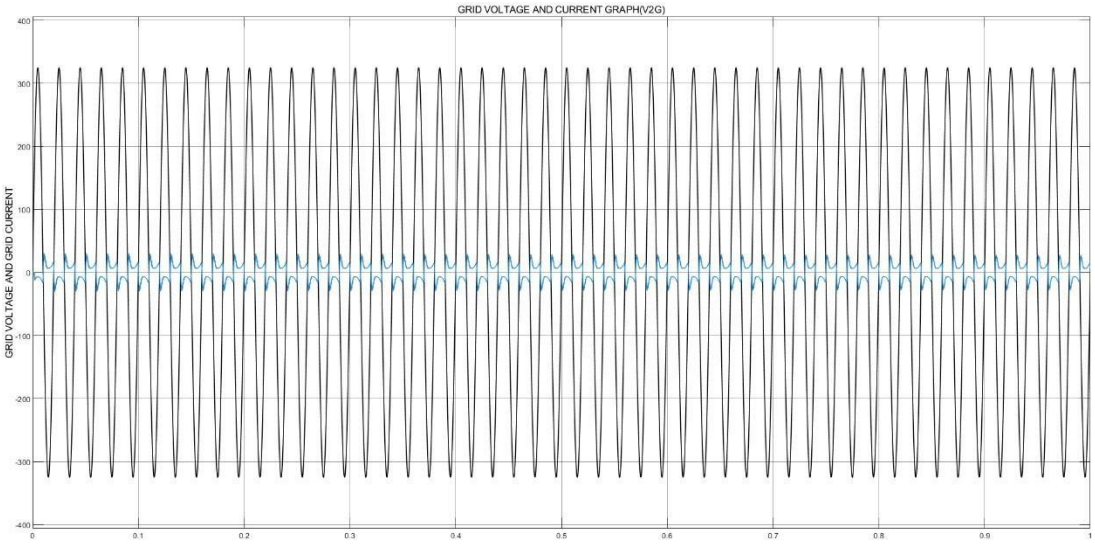

Fig 11: Voltage and current waveform of grid side discharging (V2G) mode using PID controller

The graph shown in fig 11 displays the grid side voltage and current during G2V when PID controller is implemented for both the bidirectional converters. The grid side voltage displays a sinusoidal wave with peak magnitude of 325V while the current displays a sinusoidal graph with magnitude of 12.68A. The voltage and current signals appear to be out of phase which also serves as a confirmation of the direction in which the power is flowing.

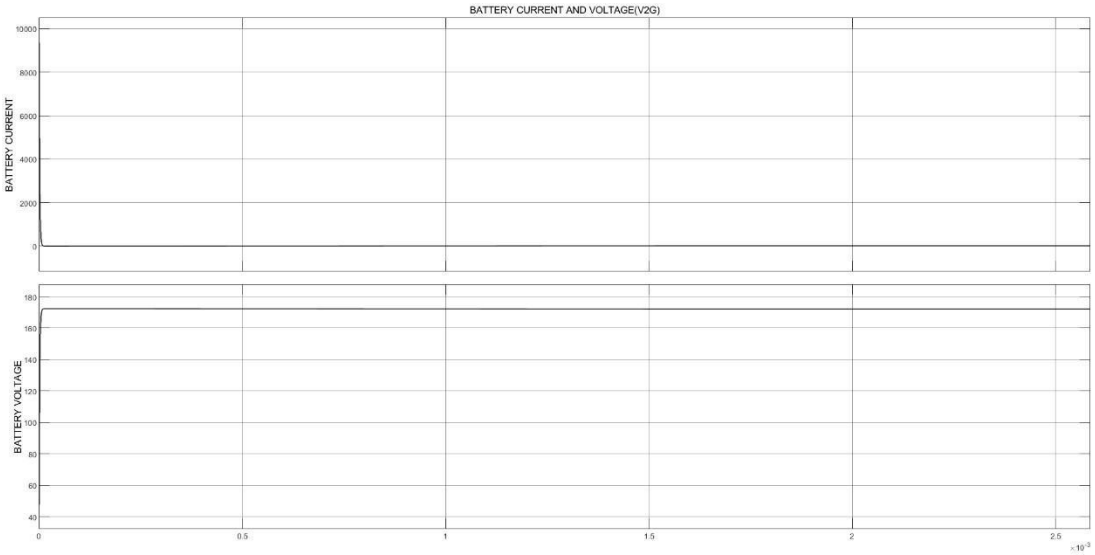

Fig 12: Current and Voltage waveform of battery discharging mode (V2G) using PID controller

The graph in fig 12 shows the current and voltage output of the battery during discharging mode when the PID controller is implemented during V2G power flow. The voltage and current show a steady state output of 171.96V and 12.07A respectively.

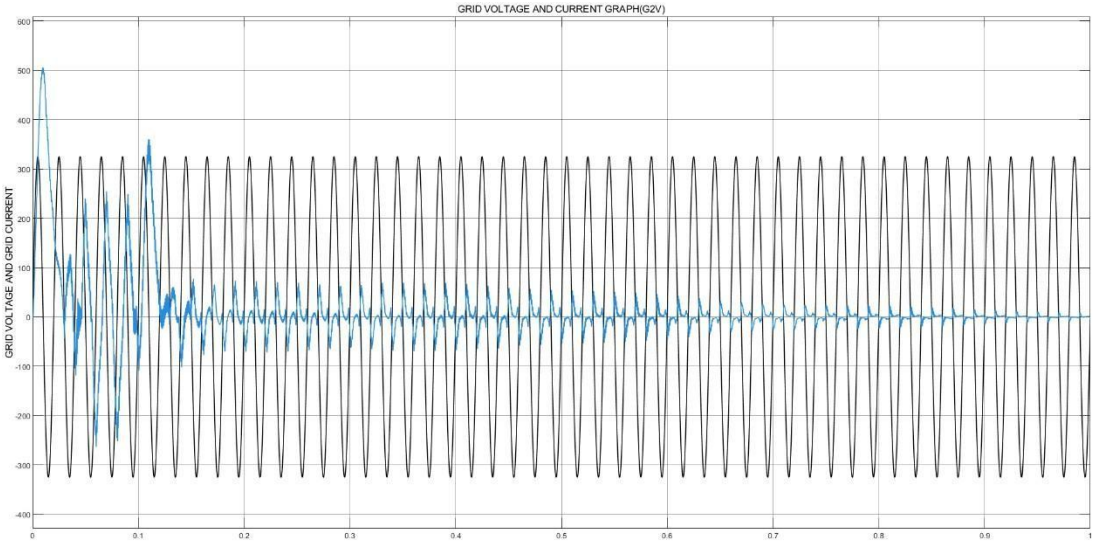

Fig 13: Voltage and current waveform of grid side charging (G2V) mode using PID controller

PID controller is implemented for both the bidirectional converters. The grid side voltage displays a sinusoidal wave with peak magnitude of 325V while the current displays a sinusoidal graph with magnitude of 12.68A. The voltage and current signals appear to be in phase which also serves as a confirmation of the direction in which the power is flowing. The ripples at the start of the graph reduce due to the LCL filter which then gives a steadier output.

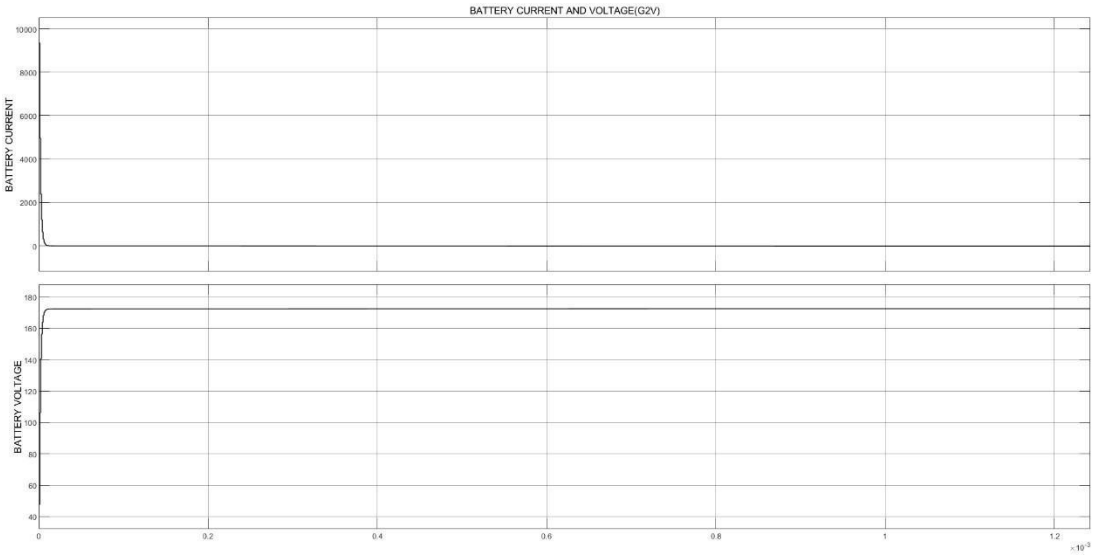

Fig 14: Current and Voltage of battery during charging mode (G2V) using PID controller

The graph in fig 14 shows the current and voltage output of the battery during discharging mode when the PID controller is implemented during G2V power flow. The voltage and current show a steady state output of 172.12V and 18.07A respectively.

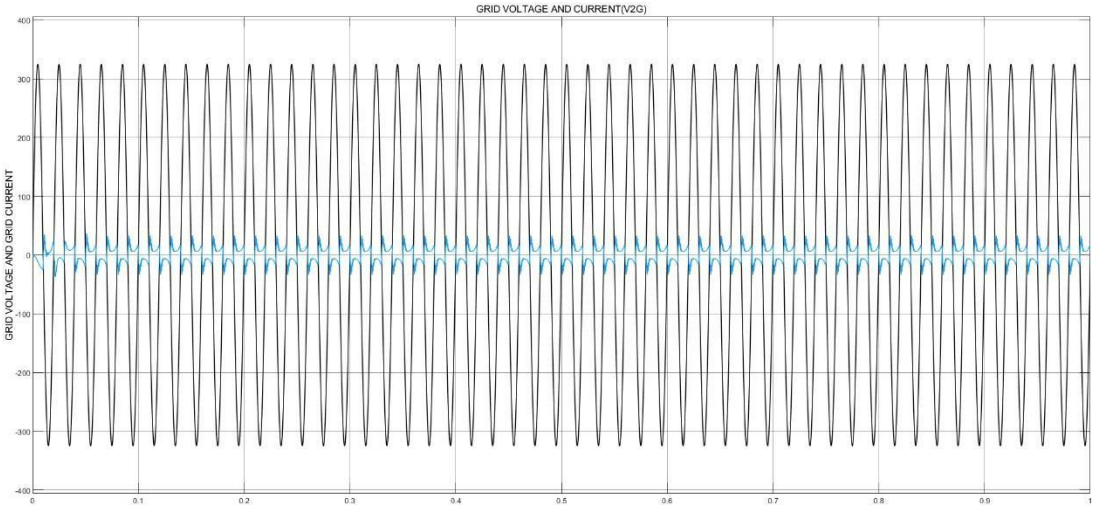

Fig 15: Voltage and current waveform of grid side discharging (V2G) mode using GAtuned-PI controller

PI controller is implemented for both the bidirectional converters. The grid side voltage displays a sinusoidal wave with peak magnitude of 325V while the current displays a sinusoidal graph with magnitude of 12.65A. The voltage and current signals appear to be out of phase which also serves as a confirmation of the direction in which the power is flowing.

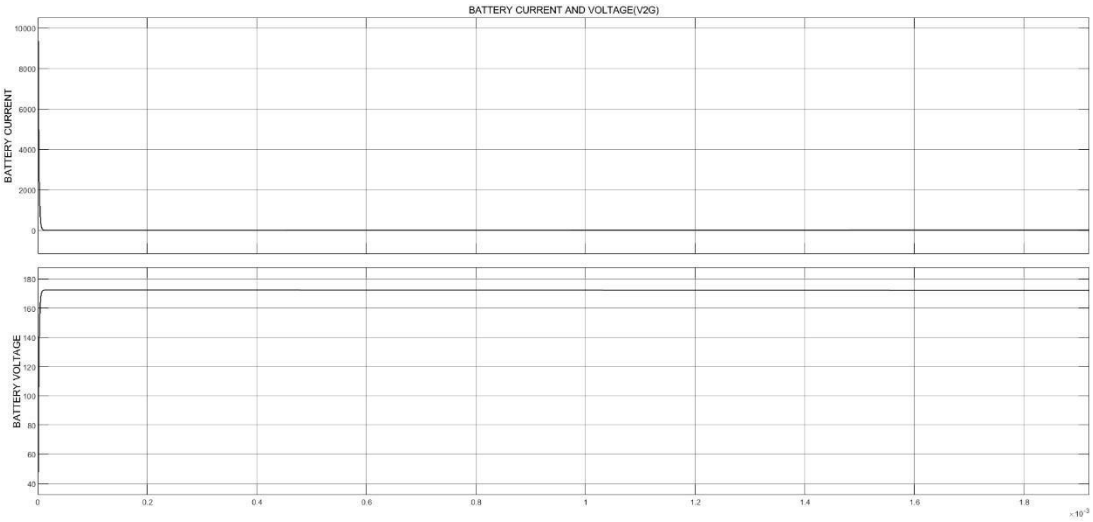

Fig 16: Current and Voltage of battery discharging mode (V2G) using GA-tuned-PI controller.

The graph in fig 16 shows the current and voltage output of the battery during discharging mode when the GA-tuned-PI controller is implemented during V2G power flow. The voltage and current show a steady state output of 172V and 12.21A respectively.

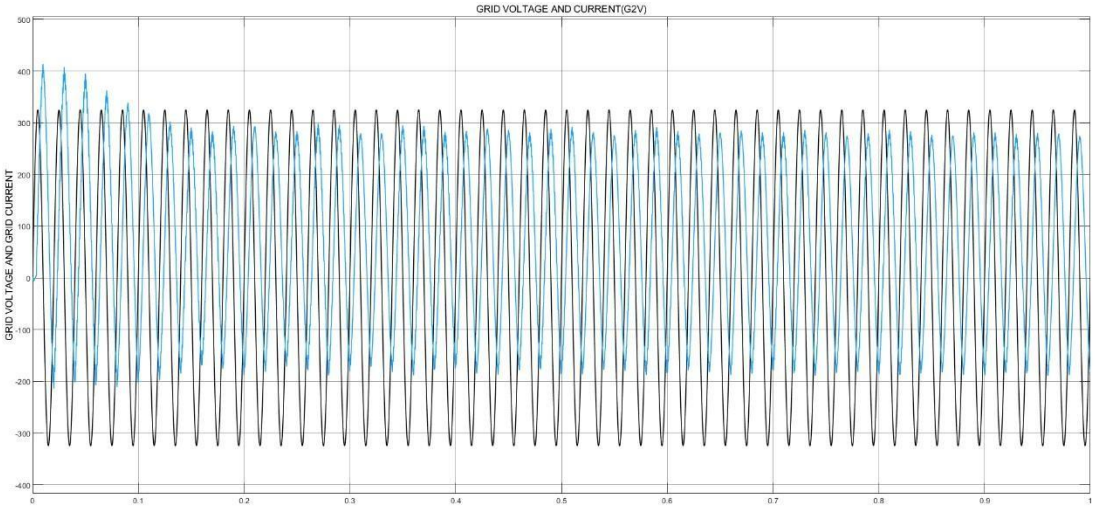

Fig 17: Voltage and current of grid side charging (G2V) mode using GA-tuned-PI controller.

The graph shown in fig 17 displays the grid side voltage and current during G2V when GA-tuned PI controller is implemented for both the bidirectional converters. The grid side voltage displays a sinusoidal wave with peak magnitude of 229.8V while the current displays a sinusoidal graph with magnitude of 17.28A. Ripples are observed in the grid side current graph as a result of weak filtering.

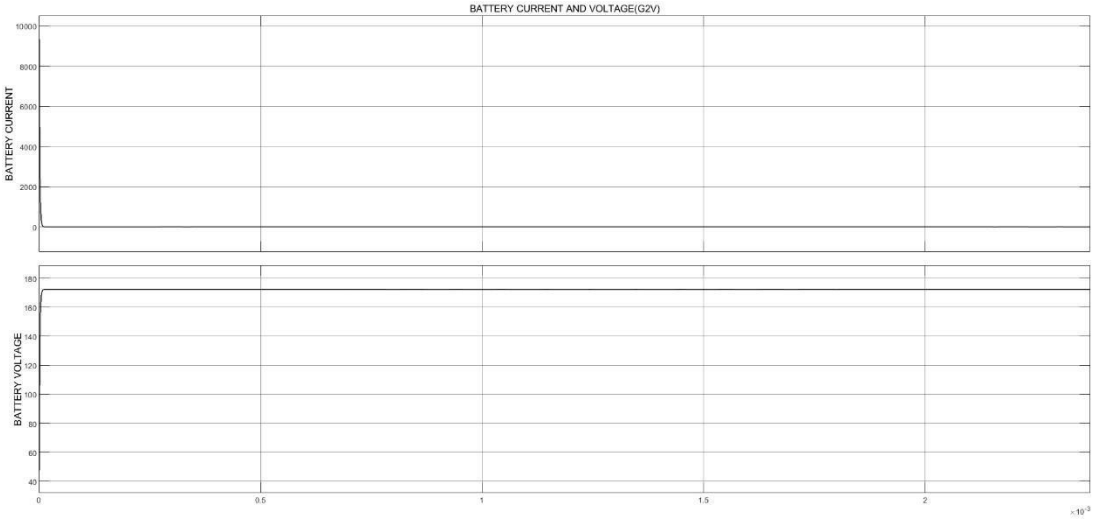

Fig 18: Current and Voltage of battery charging mode (G2V) using GA-tuned-PI controller.

The graph in fig 18 shows the current and voltage output of the battery during discharging mode when the PSO-tuned-PI controller is implemented during G2V power flow. The voltage and current show a steady state output of 172.4 V and 43.67A respectively.

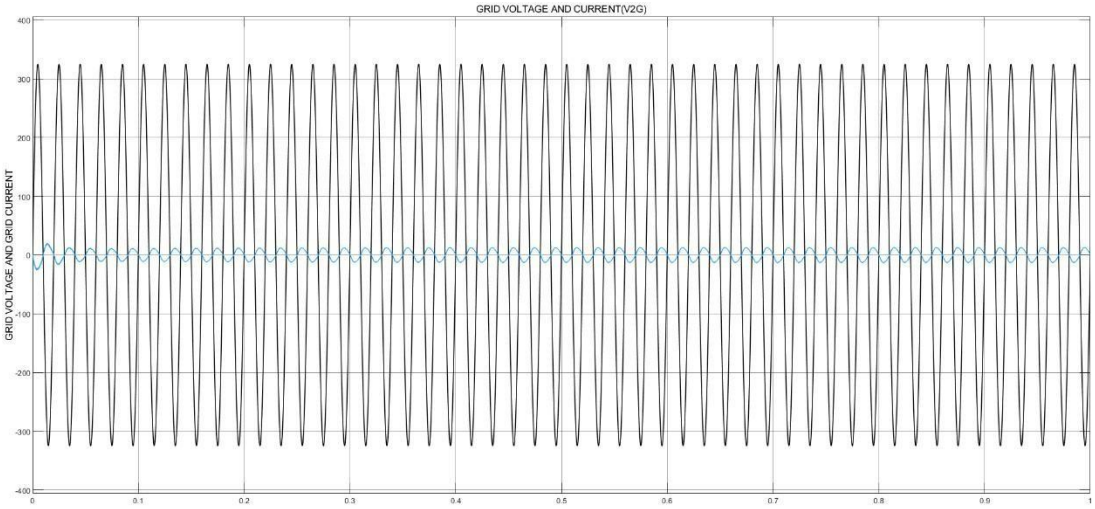

Fig 19: Voltage and current of grid side discharging (V2G) mode using PSO-tunedPI controller

The graph shown in fig 19 displays the grid side voltage and current during V2G when PSO-tuned PI controller is implemented for both the bidirectional converters. The grid side voltage displays a sinusoidal wave with peak magnitude of 229.8V while the current displays a sinusoidal graph with magnitude of 8.958A.

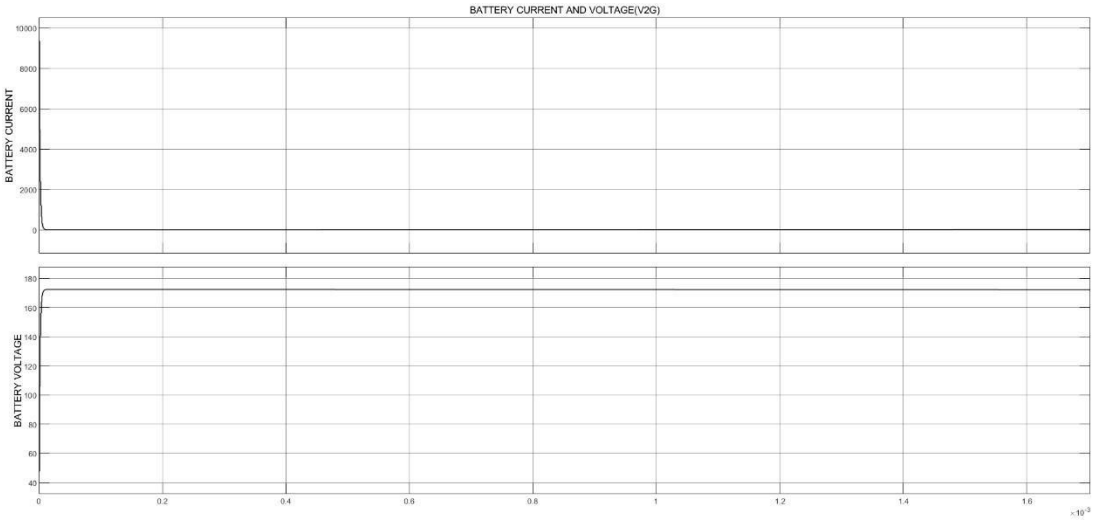

Fig 20: Current and Voltage waveform battery discharging mode (V2G) using PSOtuned-PI controller

The graph in fig 20 shows the current and voltage output of the battery during discharging mode when the PSO-tuned-PI controller is implemented during V2G power flow. The voltage and current show a steady state output of 172Vand 43.3A respectively.

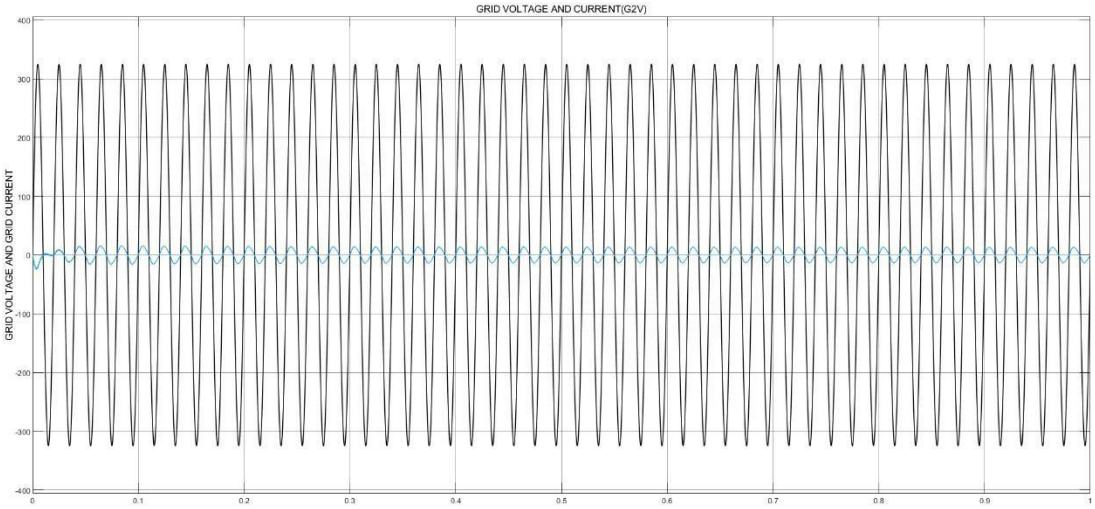

Fig 21: Voltage and current waveform of grid side charging (G2V) mode using PSOtuned-PI controller

The graph shown in fig 21 displays the grid side voltage and current during G2V when PSO-tuned PI controller is implemented for both the bidirectional converters. The grid side voltage displays a sinusoidal wave with peak magnitude of 229.8V while the current displays a sinusoidal graph with magnitude of 9.52A.

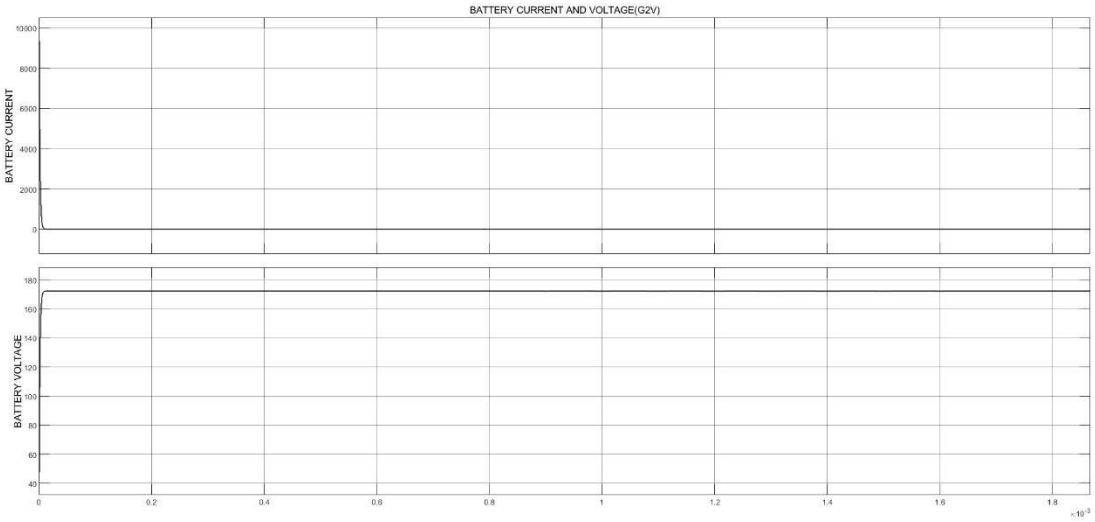

Fig 22: Current and Voltage waveform battery charging mode (G2V) using PSOtunedPI controller

The graph in fig 22 shows the current and voltage output of the battery during discharging mode when the PSO-tuned-PI controller is implemented during G2V power flow. The voltage and current show a steady state output of 172.4V and 44.34A respectively.

4.4 RESULTS AND DISCUSSION

Controllers	Performance parameters				
	Rise time (µs)	Under shoot (%)	Settling Time (µs)	Over Shoot (%)	Slew Rate (µs)
PI	2.684	1.54	4.493	0.49	36.893
PID	2.657	1.37	4.478	0.39	37.194
GA tuned PI	2.644	1.29	4.471	0.49	37.350
PSO tuned PI	2.642	1.26	4.415	0.46	37.350

Table 3: Parameters of all controllers

Hence, the PSO-tuned-PI controller was designed and its performance was evaluated and compared with respect to the parameters of rise time, undershoot, settling time, overshoot and slew rate. Table 3 presents a comparative analysis of the controllers further highlighting the improvement achieved though this optimization technique. The observation shows that the PSO-tuned PI controller exhibits the best performance by achieving the lowest rise time of 2.642 µs, minimum undershoot of 1.26%, a low overshoot of 0.46% and the shortest settling time of 4.415 µs. It also provides the highest slew rate of 37.350/µs which shows that it has a faster and more stable response as compared to the PI, PID AND GA-tuned PI controllers.

Error Parameters	PI controller	PID controller	GA tuned PI controller	PSO tuned PI controller
IAE	418.6	275.4	103.5	102.3
ITAE	7.656	6.5	5.34	5.336
ISE	18.980	13.8	9.380	9.376

Table 4: Performance of all controllers

In Table 4 a comparative study of the performance indices namely, the Integral Absolute Error (IAE), Integral Time Absolute Error (ITAE) and Integral Square Error (ISE) have been carried out for different controllers. The results indicate that the PSOtuned PI controller has the lowest values of error as compared to the PI, PID and GAtuned PI controllers.

Controllers	V_{in} (Volt)	I_{in} (A)	V_{out} (Volt)	I_{out} (A)	P_{in} (Watts)	P_{out} (watts)	Efficiency (%)
PI	404.2	13	325	12.68	5254.6	4121	78.42%
PID	405.6	12.42	325	12.68	5037.55	4121	81.81
GA-tuned PI	404.2	12.03	325	12.68	4862.53	4121	84.75
PSO-tuned PI	404.2	11.9	325	12.68	4809.98	4121	85.67

Table 5: Efficiency comparison of all controllers

Among the four controllers compared, the PSO-tuned PI controller exhibited the best performance with an efficiency of 85.67% which performed better than the GA-tuned PI, PID and PI controllers.

CHAPTER V

5. CONCLUSION

In this thesis, the substantial benefits of using advanced intelligent control techniques, such as the conventional tuning methods like PI, PID as well as metaheuristic methods such as PSO-tuned-PI and finally GA-tuned-PI, with a particular focus on PSOtunedPI controllers, for optimal power management in bidirectional converter systems for vehicle-to-grid (V2G) and grid to-vehicle (G2V) integration. A comparative study was conducted on each of these controllers when put in a closed loop with the bidirectional converters. Comparative simulations using MATLAB/Simulink showed that the PSOtuned-PI controller consistently outperforms conventional PI, PID, and GA-tuned-PI controllers across key parameters such as settling time, efficiency, and error reduction. As a conclusion, it was noted that PSO-tuned-PI displayed the best results with a settling time of 4.415 s as compared to GA-tuned-PI, PID and PI which displayed a settling time of 4.471 s, 4.478 s,4.591 s respectively. PSO-tuned-PI obtained best efficiency at 85.5 % along with its ISE, ITAE and IAE values as 102.3, 5.336 and 9.376. Looking ahead, vehicle-to-grid (V2G) technology holds a remarkable promise by potentially holding the future of energy systems. It does so by enabling electric vehicles to serve not only as transportation but also as distributed energy resources. V2G empowers greater grid stability, resilience and renewable integration. V2G soon holds to become a cornerstone of the global shift to intelligent, interconnected and a low-carbon energy form of networks.

REFERENCES

[1] V. Rishishwar, A. Raghuwanshi and A. Ojha, "Single phase Bi-directional Electric vehicle battery charger with G2V, V2G & V2L Technologies," 2023 IEEE Renewable Energy and Sustainable E-Mobility Conference (RESEM), Bhopal, India, 2023, pp. 16, doi:10.1109/RESEM57584.2023.10236098.

[2] R. Zgheib, K. Al-Haddad and I. Kamwa, "V2G, G2V and active filter operation of a bidirectional battery charger for electric vehicles," 2016 IEEE International Conference on Industrial Technology (ICIT), Taipei, Taiwan, 2016, 10.1109/ICIT.2016.7474935.

[3] M. Yilmaz and P. T. Krein, "Review of the Impact of Vehicle-to-Grid Technologies on Distribution Systems and Utility Interfaces," in IEEE Transactions on Power Electronics, vol. 28, no. 12, pp. 5673-5689.

[4] S. Anju and S. Sheela, "A Single-Phase Bidirectional Converter for V2G Operation of Electric Vehicles," Int. Res. J. Eng. Technol. (IRJET), vol. 7, no. 6, pp. 7410–7415, Jun. 2020.

[5] M. C. Kisacikoglu, B. Ozpineci and L. M. Tolbert, "Effects of V2G reactive power compensation on the component selection in an EV or PHEV bidirectional

charger," 2010 IEEE Energy Conversion Congress and Exposition, Atlanta, GA, 2010, pp. 870876.

[6] Tomic J, Kempton W. “Using fleets of electric-drive vehicles for grid support,” Journal of Power Sources, 2007, 168(2): pp 459-468.

[7] Yilmaz M, Krein P. Review of the impact of vehicle-to-grid technologies on distribution systems and utility interfaces. IEEE Transactions on Power Electronics, 2012: pp 1-32.

[8] Hasan Komurcugil, Osman Kukrer. Lyapunov-Based Control for Three-Phase PWM AC/DC Voltage-Source Converters. IEEE Transactions on Power Electronics, vol. 13, no. 5, pp. 801 813.1998.

[9] Gorji SA, Ektesabi M, Zheng J. “Double-input boost/Y-source DC-DC converter for renewable energy sources”. Proc. IEEE SPEC 16, 2016, Auckland, pp. 1–6, 2016.

[10] "Zhao C, Round SD, Kolar JW. “An isolated three-port bidirectional DC-DC converter with decoupled power flow management”. IEEE Trans Power Electron 23(5):2443–2453, 2008.

[11] "Hamasaki S, Mukai R, Tsuji M “Control of power levelling unit with super capacitor using bidirectional buck/ boost DC/DC converter”. Proc. ICRERA, 2012, Nagasaki, pp. 1–6, 2012.

[12] Muhammad Ilyas Menhas, Ling Wang, Minrui Fei, Hui Pan, Comparative performance analysis of various binary coded PSO algorithms in multivariable PID controller design, Expert Systems with Applications, Volume 39, Issue 4, 2012, Pages 4390-4401, ISSN 0957 4174, https://doi.org/10.1016/j.eswa.2011.09.152.

[13] C. -H. Liu and Y. -Y. Hsu, "Design of a Self-Tuning PI Controller for a STATCOM Using Particle Swarm Optimization," in IEEE Transactions on Industrial Electronics, vol. 57, no. 2, pp. 702-715, Feb. 2010, doi: 10.1109/TIE.2009.2028350.

[14] A Single-Phase Bidirectional Converter for V2G Operation of Electric Vehicles International Research Journal of Engineering and Technology (IRJET) e-ISSN: 23950056.

[15] Prachi Tripathi, et. al. International Journal of Engineering Research and Applications www.ijera.com ISSN: 2248-9622, Vol. 11, Issue 6, (Series-V) June 2021, pp. 24-30.

[16] Pandiyan Rengan, Prajot Prakash Borkar, Alyssa Dominica Sequeira,Arul Rajagopalan,Mercy Dorairaj,Anbarasan Karunamoorthy,."Solar Power Feed Wireless Power Transfer System to Charge EV Battery Using Fuzzy Logic Control," 2024 IEEE 1st International Conference on Green Industrial Electronics and Sustainable Technologies (GIEST), Imphal, India, 2024, pp. 1-6, doi: 10.1109/GIEST62955.2024.10959912.

[17] S.Titus and R.Pandiyan "Intelligent Control Systems and Performance Analysis of PMDC Motor Drives. AMSE JOURNALS –Series: Advances C; Vol. 69; N° 1; pp 69-84, 2014.

APPENDICES

Appendix 1: PSO CODE

tunning_30_8_25.m | pso_algo_source_code_pi_tuned.m

```
clear all
close all
clc

% Define the details of the table design problem
nVar = 3;                   % number of variables
ub = [1000 1000 1000]; %upper Bound
lb = [0 0 0];               % lower bound
fobj = @tunning;            % Objective function Name

% Define the PSO's paramters
noP = 15;                     % number of particles for initialization
maxIter = 100;                % maximum iterations
wMax = 1;
wMin = 0.1;
c1 = 2;
c2 = 2;
vMax = (ub - lb) .* 0.2;
vMin  = -vMax;


% The PSO algorithm

% Initialize the particles
for k = 1 : noP
    Swarm.Particles(k).X = (ub-lb) .* rand(1,nVar) + lb;
    Swarm.Particles(k).V = zeros(1, nVar);
    Swarm.Particles(k).PBEST.X = zeros(1,nVar);
    Swarm.Particles(k).PBEST.O = inf;

    Swarm.GBEST.X = zeros(1,nVar);
    Swarm.GBEST.O = inf;
end

```

tunning_30_8_25.m | pso_algo_source_code_pi_tuned.m

```


% Main loop
for t = 1 : maxIter

    % Calcualte the objective value
    for k = 1 : noP
        currentX = Swarm.Particles(k).X;
        Swarm.Particles(k).O = fobj(currentX);

        % Update the PBEST
        if Swarm.Particles(k).O < Swarm.Particles(k).PBEST.O
            Swarm.Particles(k).PBEST.X = currentX;
            Swarm.Particles(k).PBEST.O = Swarm.Particles(k).O;
        end

        % Update the GBEST
        if Swarm.Particles(k).O < Swarm.GBEST.O
            Swarm.GBEST.X = currentX;
            Swarm.GBEST.O = Swarm.Particles(k).O;
        end
    end

    % Update the X and V vectors
    w = wMax - t .* ((wMax - wMin) / maxIter);

    for k = 1 : noP
        Swarm.Particles(k).V = w .* Swarm.Particles(k).V + c1 .* rand(1,nVar) .* (Swarm.Particles(k).PBEST.X - Swarm.Particles(k).X) ...
                                                                                + c2 .* rand(1,nVar) .* (Swarm.GBEST.X - Swarm.Particles(k).X);


        % Check velocities
        index1 = find(Swarm.Particles(k).V > vMax);
        index2 = find(Swarm.Particles(k).V < vMin);
```

tunning_30_8_25.m | pso_algo_source_code_pi_tuned.m

```
        % Check velocities
        index1 = find(Swarm.Particles(k).V > vMax);
        index2 = find(Swarm.Particles(k).V < vMin);

        Swarm.Particles(k).V(index1) = vMax(index1);
        Swarm.Particles(k).V(index2) = vMin(index2);

        Swarm.Particles(k).X = Swarm.Particles(k).X + Swarm.Particles(k).V;

        % Check positions
        index1 = find(Swarm.Particles(k).X > ub);
        index2 = find(Swarm.Particles(k).X < lb);

        Swarm.Particles(k).X(index1) = ub(index1);
        Swarm.Particles(k).X(index2) = lb(index2);

    end

    outmsg = ['Iteration# ', num2str(t) , ' Swarm.GBEST.O = ' , num2str(Swarm.GBEST.O)];
    disp(outmsg);

    cgCurve(t) = Swarm.GBEST.O;
end

semilogy(cgCurve);
xlabel('Iteration#')
ylabel('Weight')
```