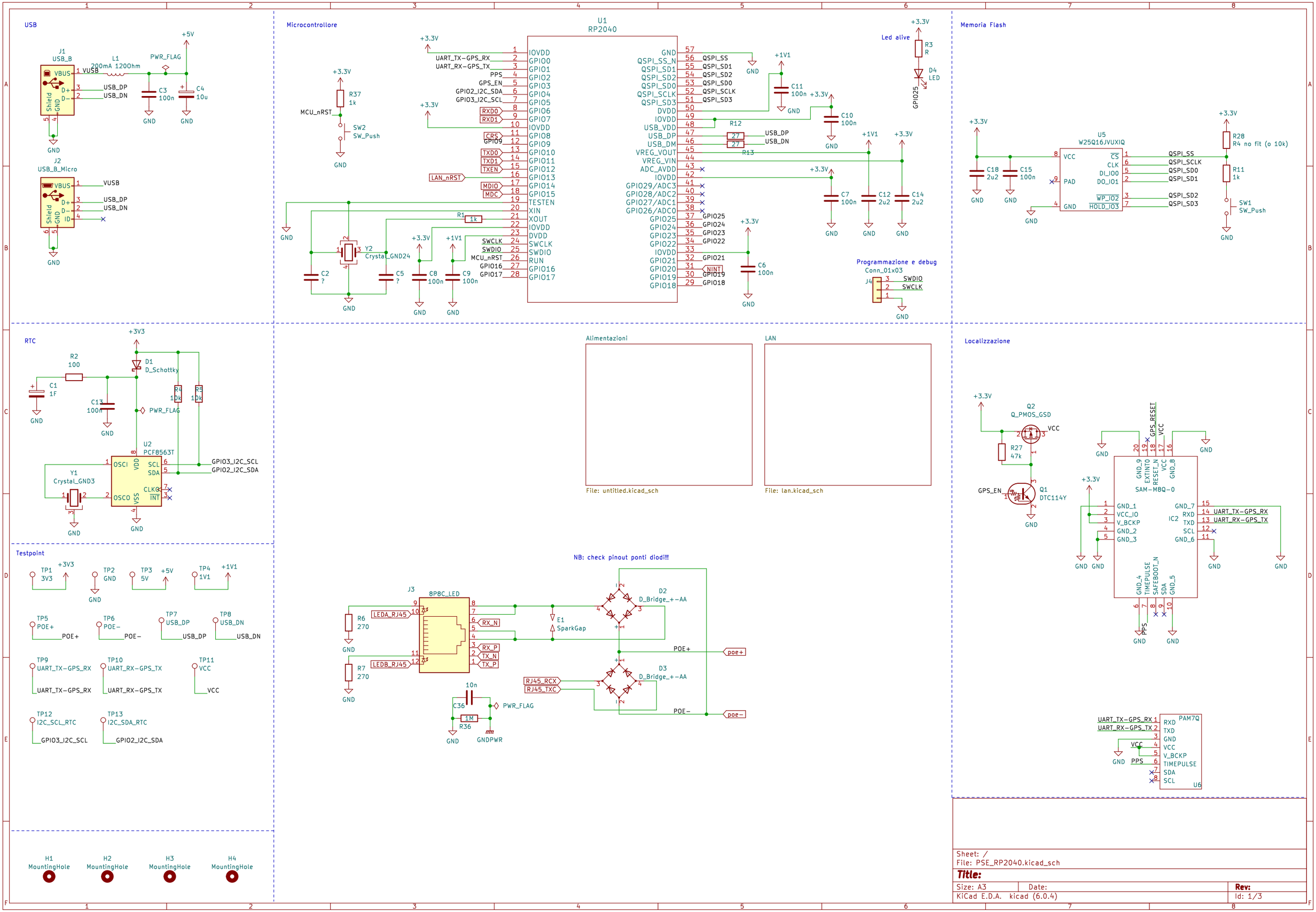
USB
J1
USB_B
L1
200mA 1200hm
PWR_FLAG
+5V
C3
100n
C4
10u
J2
USB_B_Micro
Microcontrollore
U1
RP2040
+3.3V
R37
1k
MCU_nRST
SW2
SW_Push
UART_TX-GPS_RX
UART_RX-GPS_TX
PPS
GPS_EN
GPIO2_I2C_SDA
GPIO3_I2C_SCL
RXD0
RXD1
CRS
GPIO9
TXD0
TXD1
TXEN
LAN_nRST
MDIO
MDC
R1
1k
Y2
Crystal_GND24
C2
?
C5
?
C8
100n
C9
100n
SWCLK
SWDIO
MCU_nRST
GPIO16
GPIO17
+1V1
C11
100n
C10
100n
R12
27
R13
USB_DP
USB_DN
C7
100n
C12
2u2
C14
2u2
C6
100n
Led alive
R3
R
D4
LED
GPIO25
Programmazione e debug
Conn_01x03
J4
Memoria Flash
U5
W25Q16JVUXIQ
C18
2u2
C15
100n
R28
R4 no fit (o 10k)
R11
1k
SW1
SW_Push
RTC
R2
100
C1
1F
D1
D_Schottky
C13
100n
R4
10k
R5
10k
U2
PCF8563T
Y1
Crystal_GND3
GPIO3_I2C_SCL
GPIO2_I2C_SDA
Alimentazioni
File: untitled.kicad_sch
LAN
File: lan.kicad_sch
Localizzazione
Q2
Q_PMOS_GSD
R27
47k
Q1
DTC114Y
GPS_EN
GPS_RESET
SAM-M8Q-0
IC2
UART_TX-GPS_RX
UART_RX-GPS_TX
PAM7Q
U6
Testpoint
TP1
3V3
TP2
GND
TP3
5V
TP4
1V1
TP5
POE+
TP6
POE-
TP7
USB_DP
TP8
USB_DN
TP9
UART_TX-GPS_RX
TP10
UART_RX-GPS_TX
TP11
VCC
TP12
I2C_SCL_RTC
TP13
I2C_SDA_RTC
NB: check pinout ponti diodi!!
J3
8P8C_LED
LEDA_RJ45
LEDB_RJ45
R6
270
R7
270
E1
SparkGap
D2
D_Bridge_+-AA
D3
D_Bridge_+-AA
RJ45_RCX
RJ45_TXC
poe+
poe-
C36
10n
R36
1M
GNDPWR
H1
MountingHole
H2
MountingHole
H3
MountingHole
H4
MountingHole
Sheet: /
File: PSE_RP2040.kicad_sch
Title:
Size: A3
Date:
Rev:
KiCad E.D.A. kicad (6.0.4)
Id: 1/3

POE

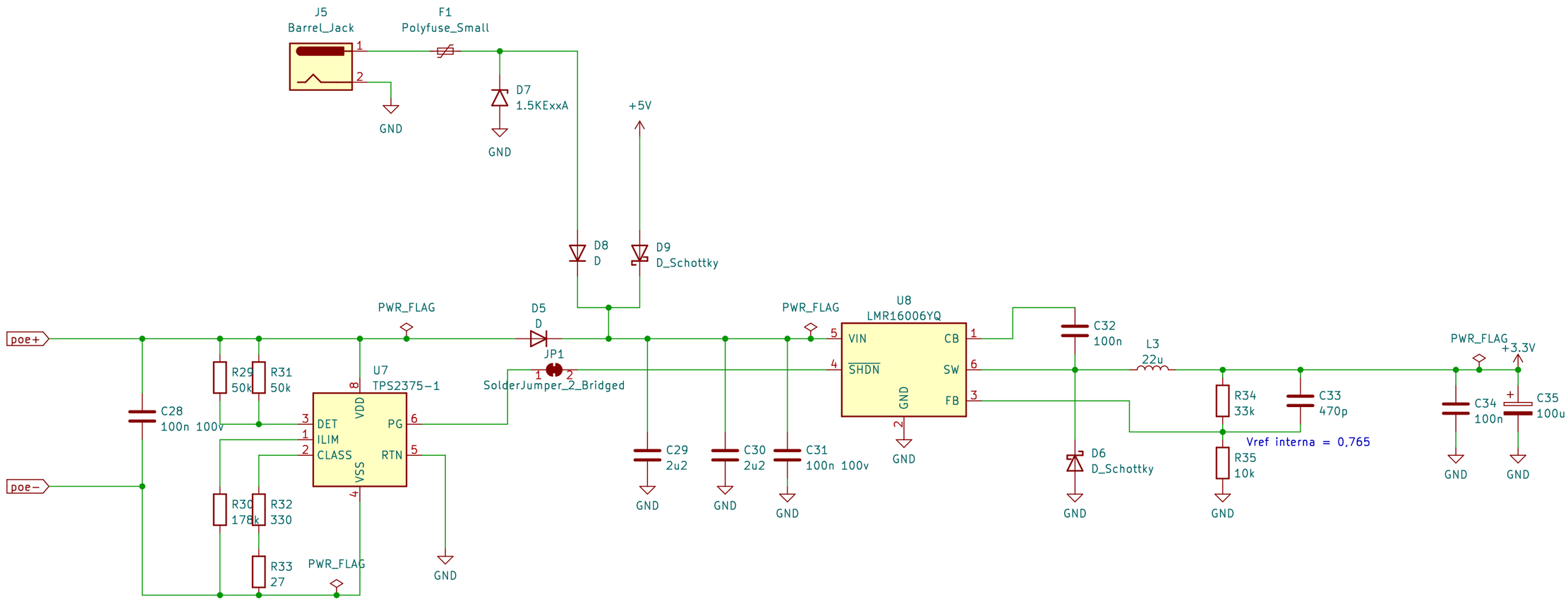

Sheet: /Alimentazioni/
File: untitled.kicad_sch

Title:

Size: A4	Date:	Rev:
KiCad E.D.A. kicad (6.0.4)		Id: 2/3

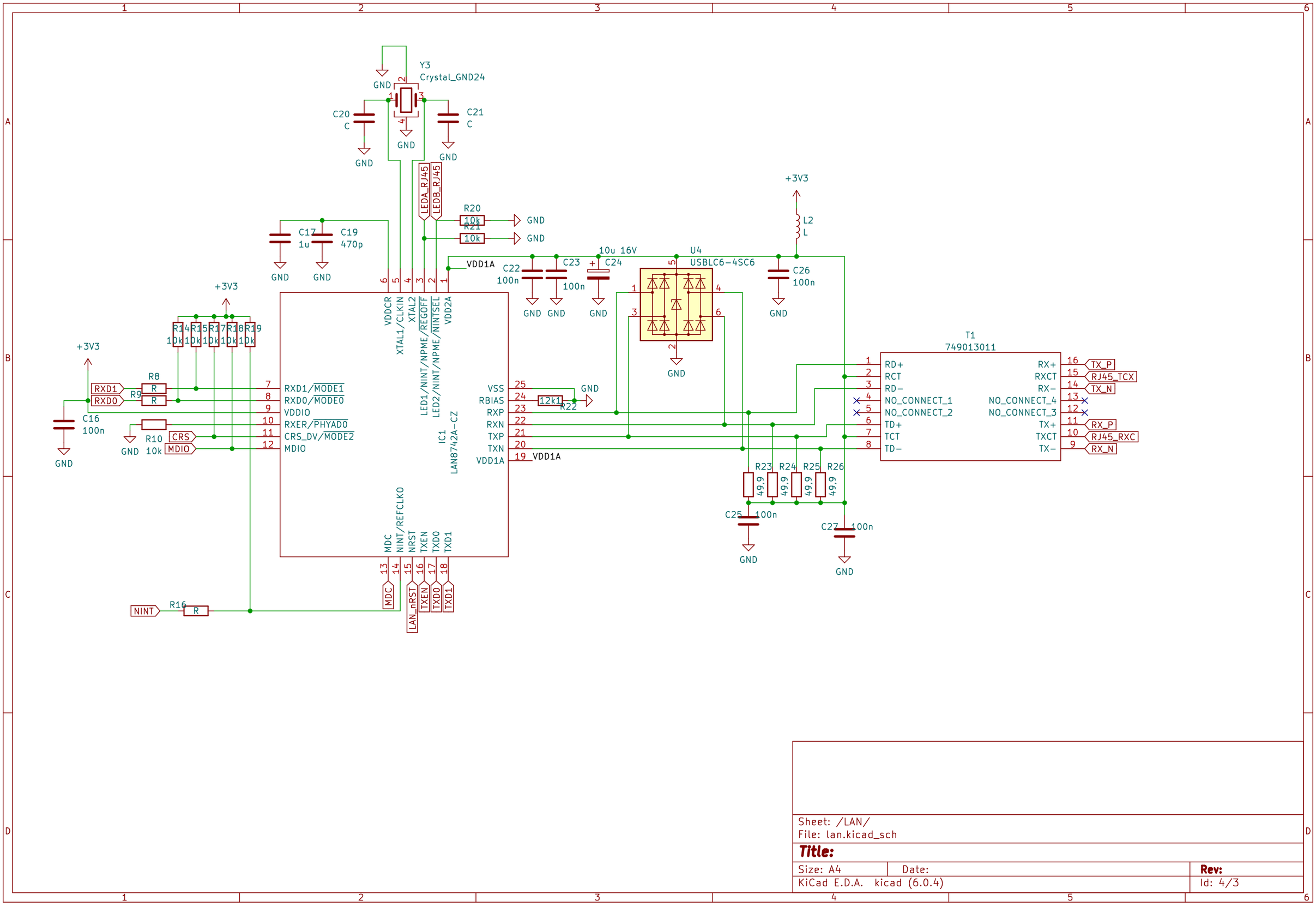

Sheet: /LAN/
File: lan.kicad_sch

Title:

Size: A4	Date:	Rev:
KiCad E.D.A. kicad (6.0.4)		Id: 4/3