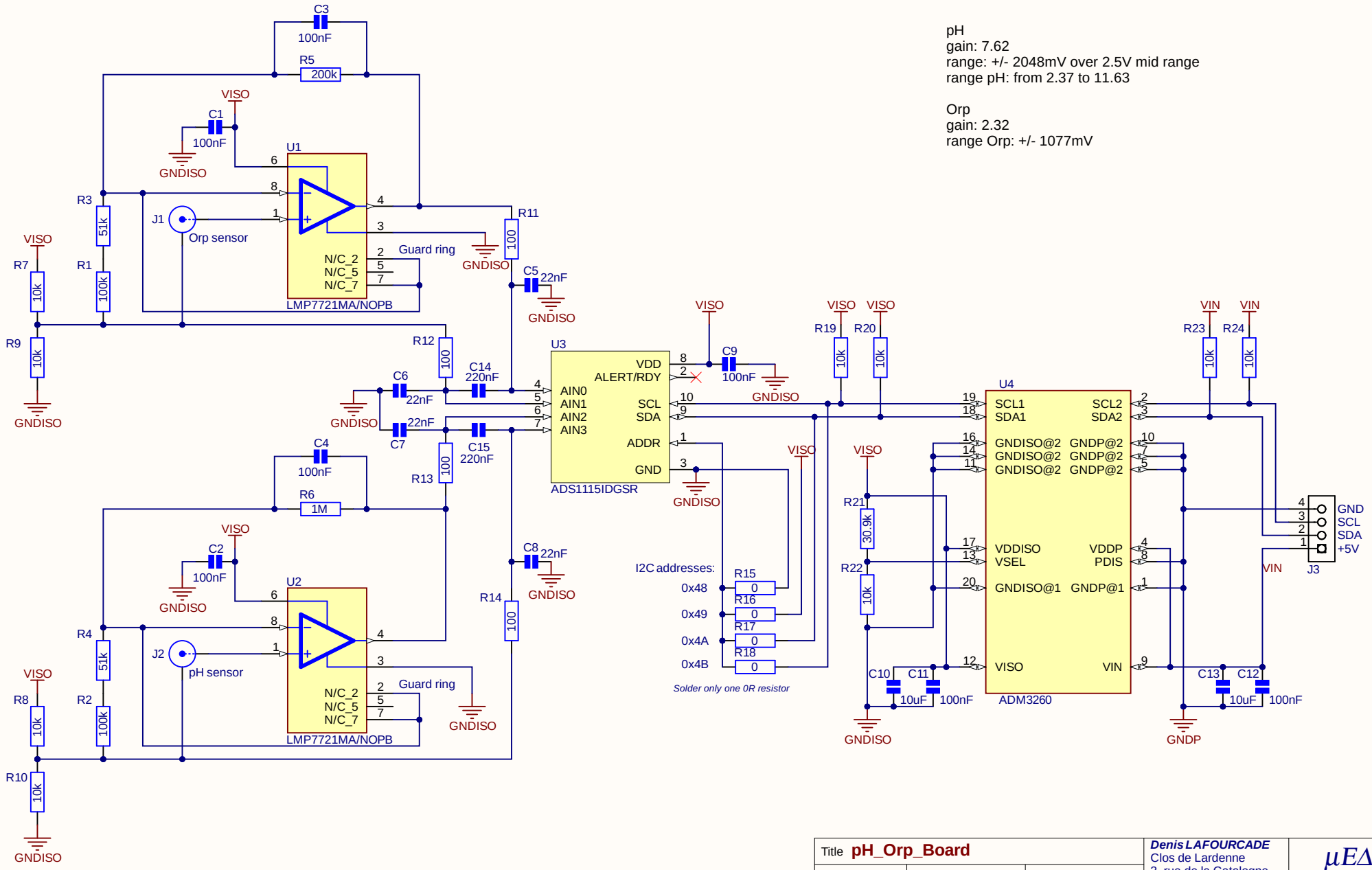

Title **pH_Orp_Board**			***Denis LAFOURCADE*** Clos de Lardenne 3, rue de la Catalogne 31170 TOURNEFEUILLE
Size: A4	Number: 0	Revision: 2	$\mu E\Delta$ Micro-Electronic Design
Date: 24/04/2024	Time: 11:44:25	Sheet 1of 1	
File: pH_Orp_Board.SchDoc		Project: pH_Orp_Board2.PrjPcb	