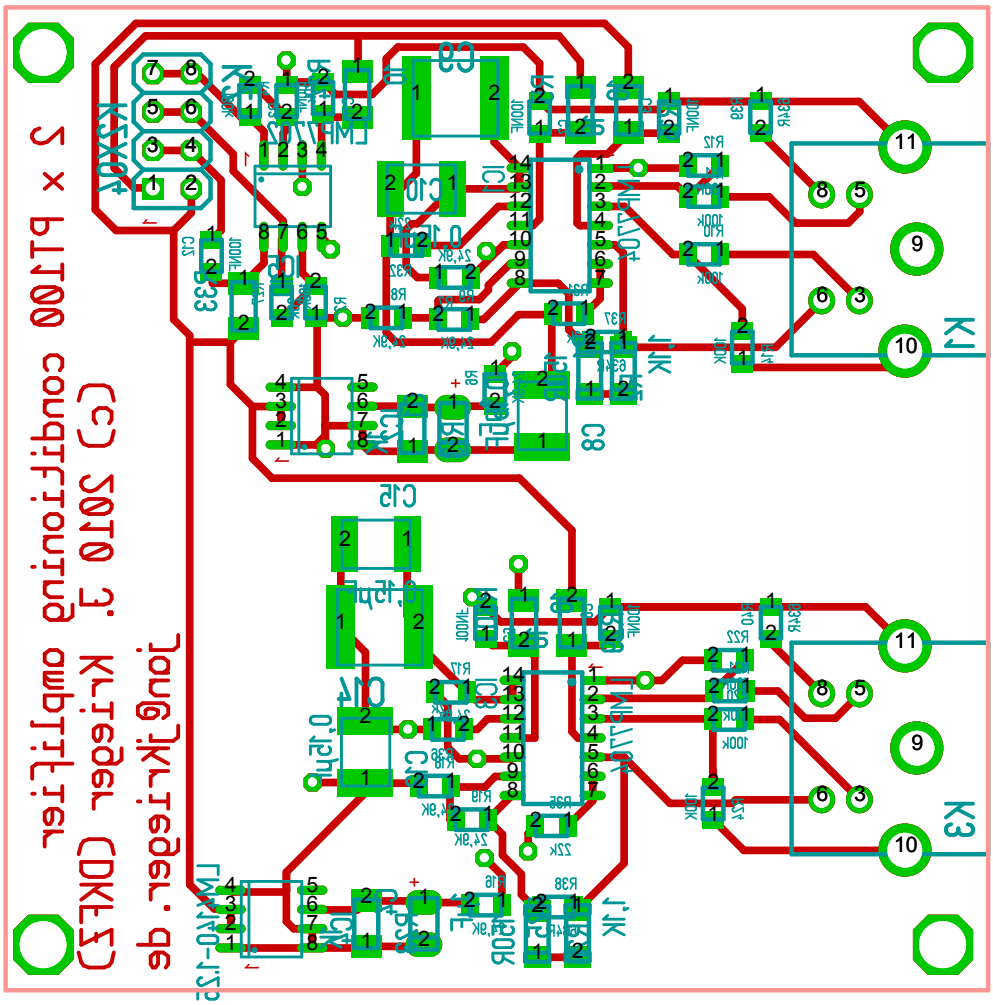
2 x PT100 conditioning amplifier
(c) 2010 J. Krieger (DKFZ)
jan@jkrieger.de

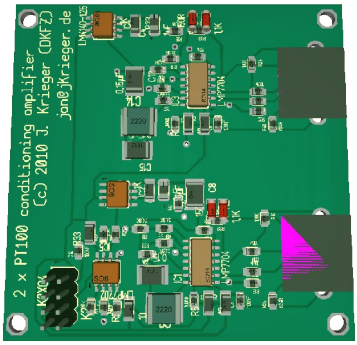
2 x PT100 conditioning amplifier
(c) 2010 J. Krieger (DKFZ)
jan@jkrieger.de

BOTTOM

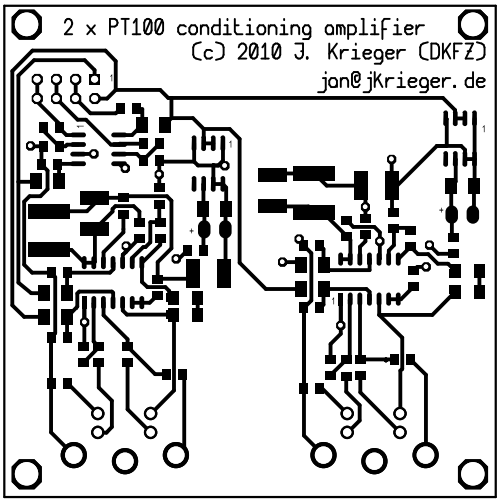
2 x PT100 conditioning amplifier
(c) 2010 J. Krieger (DKFZ)
jan@jkrieger.de
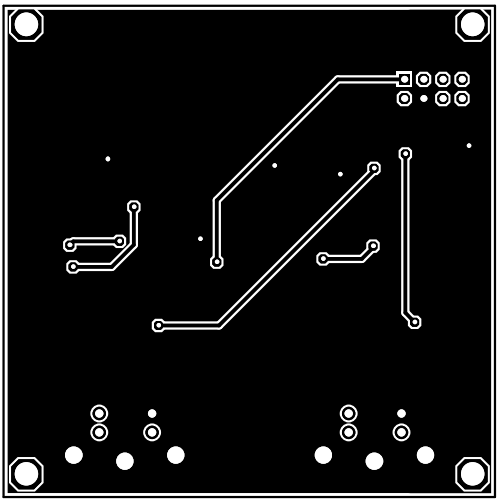
TOP