**Weaving, Processing & Engineering Spares Suppliers**
Gr.Floor, NIKUMBH' Complex, Opp. Tomato's Restaurant,
Besides Goldleaf, Off C.G.Road, Ahmedabad-380006
**Cell** : **+91 9913799333 ,** Office : 9327007508
E-mail : **sales@shreerajcorporation.com**

**SHREERAJ CORPORATION**

# Engine Powered Forklift Truck

**Smart Engineering**
Designed with advanced insulation and vibration control to reduce noise and enhance operator comfort during long working hours.

**Operator Control**
Ergonomic steering and intuitive control layout provide effortless handling and improved productivity.

**Lifting System**
Heavy-duty mast with reinforced structure ensures smooth lifting and clear forward visibility, improving safety and operational control.

**Power Unit**
Equipped with reliable engine options delivering consistent performance, fuel efficiency, and long service life.

**Comfort Design**
Shock-absorbing system and optimized seating reduce fatigue and ensure comfortable operation in demanding environments.

# Forklift Truck Attachment

**Tyre Clamps**

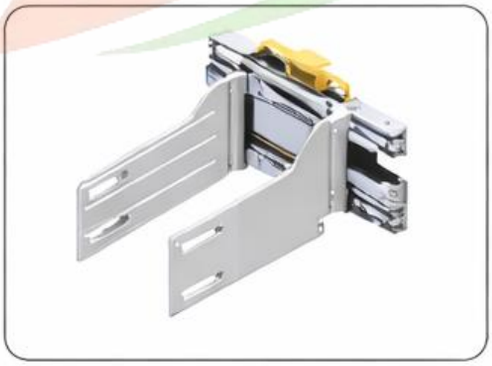

**Bale Clamps**

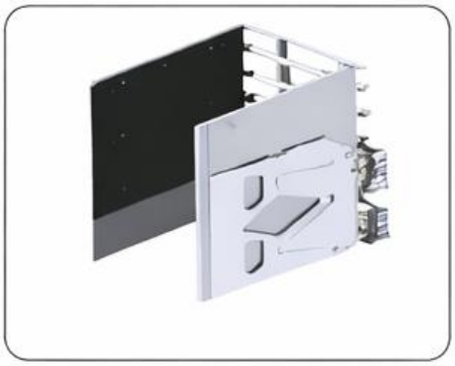

**Carton Clamps**

**Weaving, Processing & Engineering Spares Suppliers**
Gr.Floor, NIKUMBH' Complex, Opp. Tomato's Restaurant,
Besides Goldleaf, Off C.G.Road, Ahmedabad-380006
**Cell** : **+91 9913799333 ,** Office : 9327007508
E-mail : **sales@shreerajcorporation.com**

**SHREERAJ CORPORATION**

**Sideshifer**

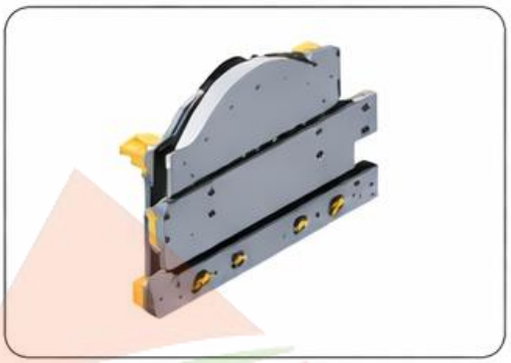

**Rotater**

**Fork Extension**

**Single Parrot Beak**

**Double Parrot Beak**

**Bell Type Brick Clamps**

**Fork Positioner**

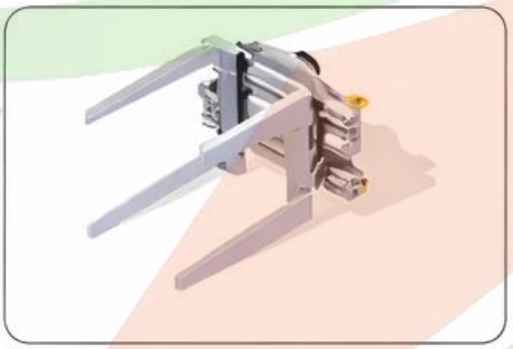

**Turnaload**

**Carpet Boom**

**Hinged Broke Handler**

**Multi-Purpose Clamps**

**Crane Jib**

**Weaving, Processing & Engineering Spares Suppliers**
Gr.Floor, NIKUMBH' Complex, Opp. Tomato's Restaurant,
Besides Goldleaf, Off C.G.Road, Ahmedabad-380006
**Cell** : **+91 9913799333 ,** Office : 9327007508
E-mail : **sales@shreerajcorporation.com**

**SHREERAJ CORPORATION**

## Hand Pallet Truck

**Standard Pallet Truck**
**Model:** SR-PM100
**Capacity:** 2000 / 3000 kg
**Fork Size:** 1150 × 550 / 1220 × 685 mm

**Short Fork Pallet Truck**
**Model:** SR-PM103S
**Capacity:** 2000 / 3000 kg
**Fork Size:** 600 / 900 mm length

**Long Fork Pallet Truck**
**Model:** SR-PM103L
**Capacity:** 2000 kg
**Fork Size:** 1500 / 2000 / 2500 mm length

**Heavy Duty Pallet Truck (5 Ton)**
**Model:** SR-PM103H
**Capacity:** 5000 kg
**Fork Size:** 1150 × 550 / 1220 × 685 mm

**Weaving, Processing & Engineering Spares Suppliers**
Gr.Floor, NIKUMBH' Complex, Opp. Tomato's Restaurant,
Besides Goldleaf, Off C.G.Road, Ahmedabad-380006
**Cell** : **+91 9913799333 ,** Office : 9327007508
E-mail : **sales@shreerajcorporation.com**

**SHREERAJ CORPORATION**

**Stainless Steel Pallet Truck**
**Model:** SR-PM103SS
**Capacity:** 2000 / 2500 kg
**Fork Size:** 1150 × 550 / 1220 × 685 mm

**Rough Terrain Pallet Truck**
**Model:** SR-PM103R
**Capacity:** 1500 / 2000 kg
**Fork Type:** Wide wheels / off-road design

**High Scissor Lift Pallet Truck**
**Model:** SR-PM104X
**Capacity:** 1000 kg
**Fork Size:** 1150 × 550 / 1220 × 685 mm

**Pallet Truck with Weighing Scale**
**Model:** SR-PM103W
**Capacity:** 2000 / 2500 kg
**Fork Size:** Standard size with digital scale

**Paper Roll Pallet Truck**
**Model:** SR-PM103P
**Capacity:** 2000 / 2500 kg
**Fork Type:** Curved / roll handling design

## Manual Stacker

**Economic Hand Stacker**
**Model:** SR-MS12E
**Capacity:** 500 / 1000 kg
**Lift Height:** 1600 mm

**Standard Hand Stacker**
**Model:** SR-MS12S
**Capacity:** 1000 / 2000 kg
**Lift Height:** 1600 mm

## Drum Lifter

**Heavy Duty Hand Stacker**
**Model:** SR-MS14H
**Capacity:** 2000 / 3000 kg
**Lift Height:** 1600 mm

**Hand Stacker with Straddle Legs**
**Model:** SR-MS14SL
**Capacity:** 1000 / 1500 kg
**Lift Height:** 1600 mm

**High Lift Hand Stacker**
**Model:** SR-MS12HL
**Capacity:** 1000 / 1500 kg
**Lift Height:** 2000 / 2500 / 3000 mm

**Manual Drum Lifter**
**Model:** SR-DL12M
**Capacity:** 350 kg
**Lift Height:** 1400 mm

**Semi-Electric Drum Lifter**
**Model:** SR-DL12SE
**Capacity:** 350 kg
**Lift Height:** 1600 mm

**Weaving, Processing & Engineering Spares Suppliers**
Gr.Floor, NIKUMBH' Complex, Opp. Tomato's Restaurant,
Besides Goldleaf, Off C.G.Road, Ahmedabad-380006
**Cell** : **+91 9913799333 ,** Office : 9327007508
E-mail : **sales@shreerajcorporation.com**

**SHREERAJ CORPORATION**

## Drum Truck

**Hydraulic Drum Truck**
**Model:** SR-DH145T
**Capacity:** 300 kg
**Function:** Drum lifting & tilting for easy transport

## Drum Palletizer

**Hydraulic Drum Palletizer**
**Model:** SR-DH124P
**Capacity:** 300 kg
**Function:** Drum lifting & placement on pallets

## Electric Stacker

**Semi-Electric Stacker**
**Model:** SR-ES124SE
**Capacity:** 1000 / 2000 kg
**Lift Height:** Up to 3.5 m

**Economic Electric Stacker**
**Model:** SR-ES124E
**Capacity:** 1000 / 1500 kg
**Lift Height:** Up to 3.0 m

**Standard Electric Stacker**
**Model:** SR-ES124S
**Capacity:** 1000 / 2000 kg
**Lift Height:** Up to 3.5 m

**Heavy Duty Electric Stacker**
**Model:** SR-ES124H
**Capacity:** 1000 / 1500 kg
**Lift Height:** Up to 6.0 m

**Electric Reach Stacker**
**Model:** SR-ES124R
**Capacity:** 1500 kg
**Lift Height:** Up to 8.0 m

## Electric Pallet Truck

**Standard Electric Pallet Truck**
**Model:** SR-EP103S
**Capacity:** 2000 / 2500 kg
**Fork Size:** Standard size

**Heavy Duty Electric Pallet Truck**
**Model:** SR-EP103H
**Capacity:** 2500 / 3000 kg
**Fork Size:** Heavy-duty reinforced forks

**Electric Puller / Tug**
**Model:** SR-EP103P
**Capacity:** 1000 / 2000 / 3000 kg
**Function:** Load pulling & towing applications

**Electric Reach Stacker (Included in Range)**
**Model:** SR-ES124R
**Capacity:** 1500 kg
**Lift Height:** Up to 8.0 m

## Electric Forklift Truck

**Electric Forklift Truck – Standard Range**
**Model:** SR-EF2025
**Capacity:** 2000 / 2500 kg
**Lift Height:** 3.0 m – 5.5 m

**Electric Forklift Truck – Heavy Range**
**Model:** SR-EF3035
**Capacity:** 3000 / 3500 kg
**Lift Height:** 3.0 m – 5.5 m

**Weaving, Processing & Engineering Spares Suppliers**
Gr.Floor, NIKUMBH' Complex, Opp. Tomato's Restaurant,
Besides Goldleaf, Off C.G.Road, Ahmedabad-380006
**Cell** : **+91 9913799333 ,** Office : 9327007508
E-mail : **sales@shreerajcorporation.com**

**SHREERAJ CORPORATION**

## Diesel Forklift Truck

**Diesel Forklift Truck – 3.0 / 3.5 Ton**
**Model:** SR-DF3035
**Capacity:** 3000 / 3500 kg
**Lift Height:** 3.0 m – 6.0 m

**Diesel Forklift Truck – 4.5 / 5.0 Ton**
**Model:** SR-DF4550
**Capacity:** 4500 / 5000 kg
**Lift Height:** 3.0 m – 6.0 m

**Diesel Forklift Truck – Heavy Duty 6–7 Ton**
**Model:** SR-DF6070
**Capacity:** 6000 / 7000 kg
**Lift Height:** 3.0 m – 6.0 m

**Gas / LPG Forklift Truck**
**Model:** SR-LF3035
**Capacity:** 3000 / 3500 kg
**Lift Height:** 3.0 m – 6.0 m

## Battery Operated Truck

**Diesel Forklift Truck – TKC Series**
**Model:** SR-DF30TKC
**Capacity:** 3000 / 3500 kg
**Lift Height:** 3.0 m – 6.0 m

**Electric Platform Truck – 3 Wheeler**
**Model:** SR-BT30-3W
**Capacity:** 1000 / 2000 kg

**Electric Platform Truck – 4 Wheeler**
**Model:** SR-BT30-4W
**Capacity:** 2000 / 3000 / 5000 kg

**Heavy Duty Tow Truck**
**Model:** SR-BT100H
**Capacity:** Up to 10,000 kg

**Light Duty Tow Truck**
**Model:** SR-BT20L
**Capacity:** 1000 / 2000 kg

**Electric Golf Cart**
**Model:** SR-BTGC
**Seating Capacity:** 4 / 6 / 8 / 10 Seater

**Weaving, Processing & Engineering Spares Suppliers**
Gr.Floor, NIKUMBH' Complex, Opp. Tomato's Restaurant,
Besides Goldleaf, Off C.G.Road, Ahmedabad-380006
**Cell** : **+91 9913799333 ,** Office : 9327007508
E-mail : **sales@shreerajcorporation.com**

**SHREERAJ CORPORATION**

## Order Picker

**Semi-Electric Order Picker**
**Model:** SR-OP124SE
**Capacity:** 200 kg
**Platform Height:** 2.0 m – 4.5 m

**Full-Electric Order Picker**
**Model:** SR-OP124FE
**Capacity:** 200 kg
**Platform Height:** 2.0 m – 4.5 m

## Floor Crane

**Hydraulic Floor Crane**
**Model:** SR-FC125
**Capacity:** 1000 / 2000 / 3000 kg
**Boom Height:** 2.0 m – 4.5 m

## Aerial Work Platform

**Aluminium Alloy Aerial Platform – Single Mast**
**Model:** SR-AWP100S
**Capacity:** 125 – 150 kg
**Platform Height:** 4 m – 10 m

**Aluminium Alloy Aerial Platform – Double Mast**
**Model:** SR-AWP100D
**Capacity:** 200 – 300 kg
**Platform Height:** 6 m – 12 m

## Lift Platform

**Mobile Scissor Lift Platform**
**Model:** SR-AWP109M
**Capacity:** 300 / 500 / 1000 kg
**Platform Height:** 6 m – 14 m

**Self-Propelled Scissor Lift**
**Model:** SR-AWP109SP
**Capacity:** 230 / 320 kg
**Platform Height:** 6 m – 14 m

**Self-Propelled Articulating Boom Lift (Diesel)**
**Model:** SR-AWPGTBZ
**Capacity:** 230 kg
**Platform Height:** 14 m – 24 m

**Hydraulic Scissor Table Lift**
**Model:** SR-LP300M
**Capacity:** 300 / 500 / 1000 kg
**Operation:** Manual Hydraulic

**Electric Hydraulic Scissor Table Lift**
**Model:** SR-LP300E
**Capacity:** 300 / 500 / 1000 kg
**Operation:** Electric Hydraulic

## Dock Ramp

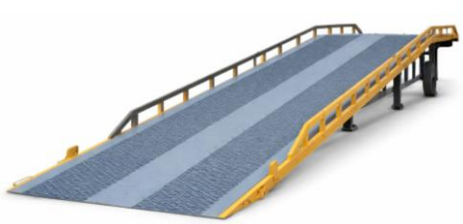

**Mobile Yard Ramp**
**Model:** SR-DRDCQY
**Capacity:** 6000 / 8000 / 10000 kg
**Application:** Container loading & unloading

**Hydraulic Dock Leveler**
**Model:** SR-DRDC
**Capacity:** 8000 / 10000 / 12000 kg
**Application:** Dock height adjustment for smooth material movement

**Weaving, Processing & Engineering Spares Suppliers**
Gr.Floor, NIKUMBH' Complex, Opp. Tomato's Restaurant,
Besides Goldleaf, Off C.G.Road, Ahmedabad-380006
**Cell** : **+91 9913799333 ,** Office : 9327007508
E-mail : **sales@shreerajcorporation.com**

**SHREERAJ CORPORATION**

## Sky Lift

**Stationary Hydraulic Lift Table**
**Model:** SR-DR109
**Capacity:** 1000 – 10000 kg
**Platform Height:** 1.7 m – 9 m

**Movable Dock Scissor Lift**
**Model:** SR-DR109M
**Capacity:** Up to 10000 kg
**Application:** Flexible lifting for loading/unloading
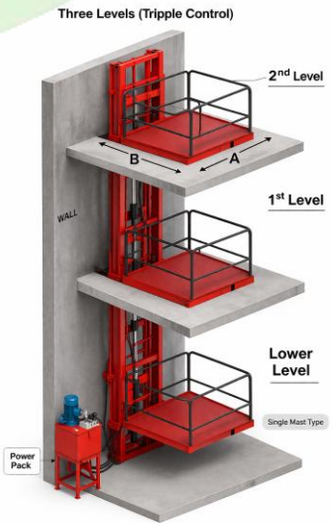
## Goods Lift