Weaving, Processing & Engineering Spares Suppliers
Gr.Floor, NIKUMBH' Complex, Opp. Tomato's Restaurant,
Besides Goldleaf, Off C.G.Road, Ahmedabad-380006
Cell : **+91 9913799333 ,** Office : 9327007508
E-mail : **sales@shreerajcorporation.com**

SHREERAJ CORPORATION

Engine Powered Forklift Truck

Smart Engineering
Designed with advanced insulation and vibration control to reduce noise and enhance operator comfort during long working hours.

Operator Control
Ergonomic steering and intuitive control layout provide effortless handling and improved productivity.

Lifting System
Heavy-duty mast with reinforced structure ensures smooth lifting and clear forward visibility, improving safety and operational control.

Power Unit
Equipped with reliable engine options delivering consistent performance, fuel efficiency, and long service life.

Comfort Design
Shock-absorbing system and optimized seating reduce fatigue and ensure comfortable operation in demanding environments.

Forklift Truck Attachment

Tyre Clamps

Bale Clamps

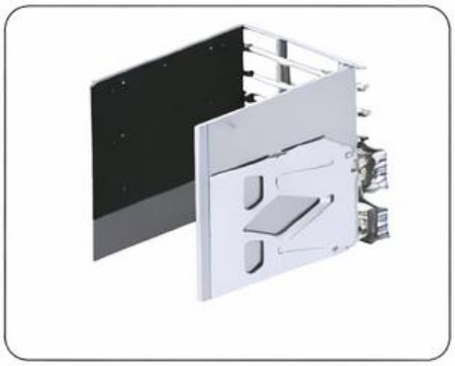

Carton Clamps

Weaving, Processing & Engineering Spares Suppliers
Gr.Floor, NIKUMBH' Complex, Opp. Tomato's Restaurant,
Besides Goldleaf, Off C.G.Road, Ahmedabad-380006
Cell : **+91 9913799333 ,** Office : 9327007508
E-mail : **sales@shreerajcorporation.com**

SHREERAJ CORPORATION

Sideshifer

Rotater

Fork Extension

Single Parrot Beak

Double Parrot Beak

Bell Type Brick Clamps

Fork Positioner

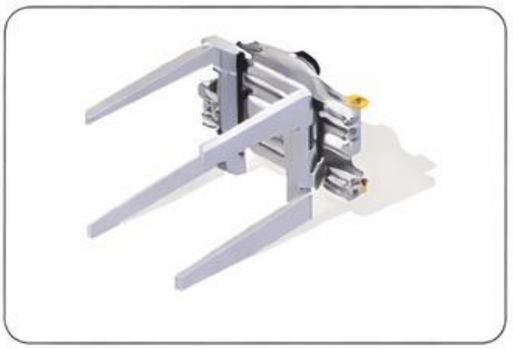

Turnaload

Carpet Boom

Hinged Broke Handler

Multi-Purpose Clamps

Crane Jib

Weaving, Processing & Engineering Spares Suppliers
Gr.Floor, NIKUMBH' Complex, Opp. Tomato's Restaurant,
Besides Goldleaf, Off C.G.Road, Ahmedabad-380006
Cell : **+91 9913799333** , Office : 9327007508
E-mail : **sales@shreerajcorporation.com**

SHREERAJ CORPORATION

Hand Pallet Truck

Standard Pallet Truck
Model: SR-PM100
Capacity: 2000 / 3000 kg
Fork Size: 1150 × 550 / 1220 × 685 mm

Short Fork Pallet Truck
Model: SR-PM103S
Capacity: 2000 / 3000 kg
Fork Size: 600 / 900 mm length

Long Fork Pallet Truck
Model: SR-PM103L
Capacity: 2000 kg
Fork Size: 1500 / 2000 / 2500 mm length

Heavy Duty Pallet Truck (5 Ton)
Model: SR-PM103H
Capacity: 5000 kg
Fork Size: 1150 × 550 / 1220 × 685 mm

Weaving, Processing & Engineering Spares Suppliers
Gr.Floor, NIKUMBH' Complex, Opp. Tomato's Restaurant,
Besides Goldleaf, Off C.G.Road, Ahmedabad-380006
Cell : **+91 9913799333 ,** Office : 9327007508
E-mail : **sales@shreerajcorporation.com**

SHREERAJ CORPORATION

Stainless Steel Pallet Truck
Model: SR-PM103SS
Capacity: 2000 / 2500 kg
Fork Size: 1150 × 550 / 1220 × 685 mm

Rough Terrain Pallet Truck
Model: SR-PM103R
Capacity: 1500 / 2000 kg
Fork Type: Wide wheels / off-road design

High Scissor Lift Pallet Truck
Model: SR-PM104X
Capacity: 1000 kg
Fork Size: 1150 × 550 / 1220 × 685 mm

Pallet Truck with Weighing Scale
Model: SR-PM103W
Capacity: 2000 / 2500 kg
Fork Size: Standard size with digital scale

Paper Roll Pallet Truck
Model: SR-PM103P
Capacity: 2000 / 2500 kg
Fork Type: Curved / roll handling design

Manual Stacker

Economic Hand Stacker
Model: SR-MS12E
Capacity: 500 / 1000 kg
Lift Height: 1600 mm

Standard Hand Stacker
Model: SR-MS12S
Capacity: 1000 / 2000 kg
Lift Height: 1600 mm

Heavy Duty Hand Stacker
Model: SR-MS14H
Capacity: 2000 / 3000 kg
Lift Height: 1600 mm

Hand Stacker with Straddle Legs
Model: SR-MS14SL
Capacity: 1000 / 1500 kg
Lift Height: 1600 mm

High Lift Hand Stacker
Model: SR-MS12HL
Capacity: 1000 / 1500 kg
Lift Height: 2000 / 2500 / 3000 mm

Drum Lifter

Manual Drum Lifter
Model: SR-DL12M
Capacity: 350 kg
Lift Height: 1400 mm

Semi-Electric Drum Lifter
Model: SR-DL12SE
Capacity: 350 kg
Lift Height: 1600 mm

Weaving, Processing & Engineering Spares Suppliers
Gr.Floor, NIKUMBH' Complex, Opp. Tomato's Restaurant,
Besides Goldleaf, Off C.G.Road, Ahmedabad-380006
Cell : **+91 9913799333 ,** Office : 9327007508
E-mail : **sales@shreerajcorporation.com**

SHREERAJ CORPORATION

Drum Truck

Hydraulic Drum Truck
Model: SR-DH145T
Capacity: 300 kg
Function: Drum lifting & tilting for easy transport

Drum Palletizer

Hydraulic Drum Palletizer
Model: SR-DH124P
Capacity: 300 kg
Function: Drum lifting & placement on pallets

Electric Stacker

Semi-Electric Stacker
Model: SR-ES124SE
Capacity: 1000 / 2000 kg
Lift Height: Up to 3.5 m

Economic Electric Stacker
Model: SR-ES124E
Capacity: 1000 / 1500 kg
Lift Height: Up to 3.0 m

Standard Electric Stacker
Model: SR-ES124S
Capacity: 1000 / 2000 kg
Lift Height: Up to 3.5 m

Heavy Duty Electric Stacker
Model: SR-ES124H
Capacity: 1000 / 1500 kg
Lift Height: Up to 6.0 m

Electric Reach Stacker
Model: SR-ES124R
Capacity: 1500 kg
Lift Height: Up to 8.0 m

Electric Pallet Truck

Standard Electric Pallet Truck
Model: SR-EP103S
Capacity: 2000 / 2500 kg
Fork Size: Standard size

Heavy Duty Electric Pallet Truck
Model: SR-EP103H
Capacity: 2500 / 3000 kg
Fork Size: Heavy-duty reinforced forks

Electric Puller / Tug
Model: SR-EP103P
Capacity: 1000 / 2000 / 3000 kg
Function: Load pulling & towing applications

Electric Reach Stacker (Included in Range)
Model: SR-ES124R
Capacity: 1500 kg
Lift Height: Up to 8.0 m

Electric Forklift Truck

Electric Forklift Truck – Standard Range
Model: SR-EF2025
Capacity: 2000 / 2500 kg
Lift Height: 3.0 m – 5.5 m

Electric Forklift Truck – Heavy Range
Model: SR-EF3035
Capacity: 3000 / 3500 kg
Lift Height: 3.0 m – 5.5 m

Weaving, Processing & Engineering Spares Suppliers
Gr.Floor, NIKUMBH' Complex, Opp. Tomato's Restaurant,
Besides Goldleaf, Off C.G.Road, Ahmedabad-380006
Cell : **+91 9913799333 ,** Office : 9327007508
E-mail : **sales@shreerajcorporation.com**

SHREERAJ CORPORATION

Diesel Forklift Truck

Diesel Forklift Truck – 3.0 / 3.5 Ton
Model: SR-DF3035
Capacity: 3000 / 3500 kg
Lift Height: 3.0 m – 6.0 m

Diesel Forklift Truck – 4.5 / 5.0 Ton
Model: SR-DF4550
Capacity: 4500 / 5000 kg
Lift Height: 3.0 m – 6.0 m

Diesel Forklift Truck – Heavy Duty 6–7 Ton
Model: SR-DF6070
Capacity: 6000 / 7000 kg
Lift Height: 3.0 m – 6.0 m

Gas / LPG Forklift Truck
Model: SR-LF3035
Capacity: 3000 / 3500 kg
Lift Height: 3.0 m – 6.0 m

Battery Operated Truck

Diesel Forklift Truck – TKC Series
Model: SR-DF30TKC
Capacity: 3000 / 3500 kg
Lift Height: 3.0 m – 6.0 m

Electric Platform Truck – 3 Wheeler
Model: SR-BT30-3W
Capacity: 1000 / 2000 kg

Electric Platform Truck – 4 Wheeler
Model: SR-BT30-4W
Capacity: 2000 / 3000 / 5000 kg

Heavy Duty Tow Truck
Model: SR-BT100H
Capacity: Up to 10,000 kg

Light Duty Tow Truck
Model: SR-BT20L
Capacity: 1000 / 2000 kg

Electric Golf Cart
Model: SR-BTGC
Seating Capacity: 4 / 6 / 8 / 10 Seater

Weaving, Processing & Engineering Spares Suppliers
Gr.Floor, NIKUMBH' Complex, Opp. Tomato's Restaurant,
Besides Goldleaf, Off C.G.Road, Ahmedabad-380006
Cell : **+91 9913799333 ,** Office : 9327007508
E-mail : **sales@shreerajcorporation.com**

SHREERAJ CORPORATION

Order Picker

Semi-Electric Order Picker
Model: SR-OP124SE
Capacity: 200 kg
Platform Height: 2.0 m – 4.5 m

Full-Electric Order Picker
Model: SR-OP124FE
Capacity: 200 kg
Platform Height: 2.0 m – 4.5 m

Floor Crane

Hydraulic Floor Crane
Model: SR-FC125
Capacity: 1000 / 2000 / 3000 kg
Boom Height: 2.0 m – 4.5 m

Aerial Work Platform

Aluminium Alloy Aerial Platform – Single Mast
Model: SR-AWP100S
Capacity: 125 – 150 kg
Platform Height: 4 m – 10 m

Aluminium Alloy Aerial Platform – Double Mast
Model: SR-AWP100D
Capacity: 200 – 300 kg
Platform Height: 6 m – 12 m

Lift Platform

Mobile Scissor Lift Platform
Model: SR-AWP109M
Capacity: 300 / 500 / 1000 kg
Platform Height: 6 m – 14 m

Self-Propelled Scissor Lift
Model: SR-AWP109SP
Capacity: 230 / 320 kg
Platform Height: 6 m – 14 m

Self-Propelled Articulating Boom Lift (Diesel)
Model: SR-AWPGTBZ
Capacity: 230 kg
Platform Height: 14 m – 24 m

Hydraulic Scissor Table Lift
Model: SR-LP300M
Capacity: 300 / 500 / 1000 kg
Operation: Manual Hydraulic

Electric Hydraulic Scissor Table Lift
Model: SR-LP300E
Capacity: 300 / 500 / 1000 kg
Operation: Electric Hydraulic

Dock Ramp

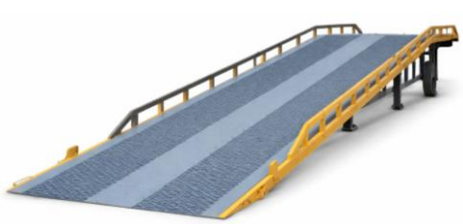

Mobile Yard Ramp
Model: SR-DRDCQY
Capacity: 6000 / 8000 / 10000 kg
Application: Container loading & unloading

Hydraulic Dock Leveler
Model: SR-DRDC
Capacity: 8000 / 10000 / 12000 kg
Application: Dock height adjustment for smooth material movement

Weaving, Processing & Engineering Spares Suppliers
Gr.Floor, NIKUMBH' Complex, Opp. Tomato's Restaurant,
Besides Goldleaf, Off C.G.Road, Ahmedabad-380006
Cell : **+91 9913799333 ,** Office : 9327007508
E-mail : **sales@shreerajcorporation.com**

SHREERAJ CORPORATION

Sky Lift

Stationary Hydraulic Lift Table
Model: SR-DR109
Capacity: 1000 – 10000 kg
Platform Height: 1.7 m – 9 m

Movable Dock Scissor Lift
Model: SR-DR109M
Capacity: Up to 10000 kg
Application: Flexible lifting for loading/unloading
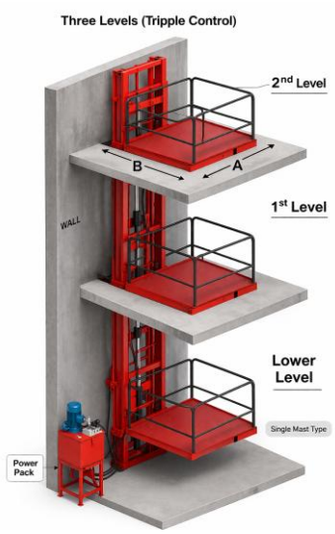
Goods Lift