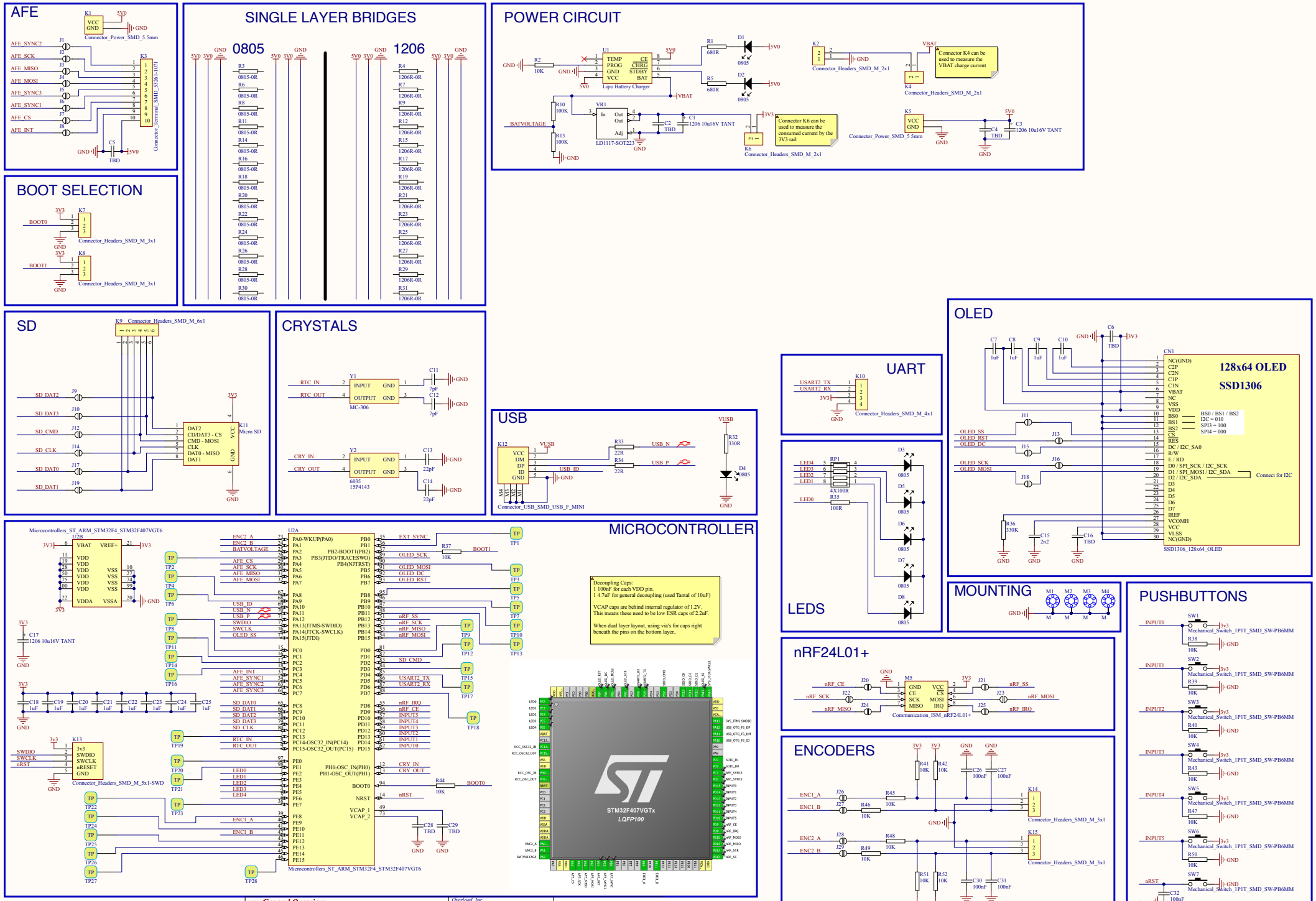
AFE
SINGLE LAYER BRIDGES
0805
1206
POWER CIRCUIT
BOOT SELECTION
SD
CRYSTALS
USB
MICROCONTROLLER
OLED
UART
LEDS
MOUNTING
PUSHBUTTONS
nRF24L01+
ENCODERS
128x64 OLED
SSD1306
STM32F407VGTx
LQFP100
General Overview
Overload, Inc.
Robbe Van Assche
Belgium
2015
STM32F407VGT6 bare breakout
Size: A4
Number: ALT0061
Revision: A
Date: 31/03/2015
Time: 1:39:31
Sheet 1 of 1
File: D:\Dropbox\PROJECTS\GITHUB\Altium\ALT0061 - STM32F407VGT6 bare breakout REV A\General Overview.SchDoc