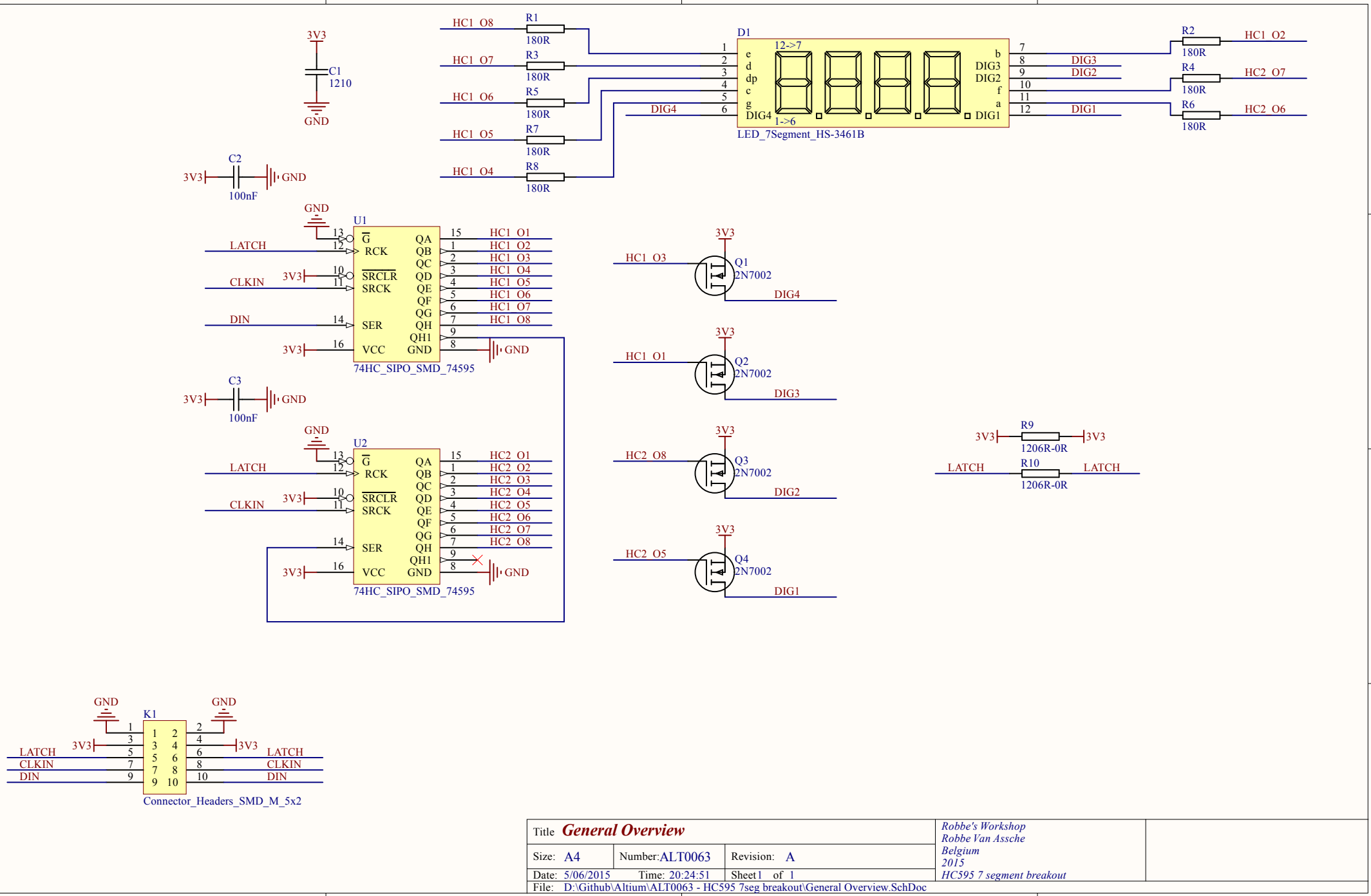

Title **General Overview**			*Robbe's Workshop* *Robbe Van Assche* *Belgium* *2015* *HC595 7 segment breakout*
Size: A4	Number: ALT0063	Revision: A	
Date: 5/06/2015	Time: 20:24:51	Sheet 1 of 1	
File: D:\Github\Altium\ALT0063 - HC595 7seg breakout\General Overview.SchDoc			

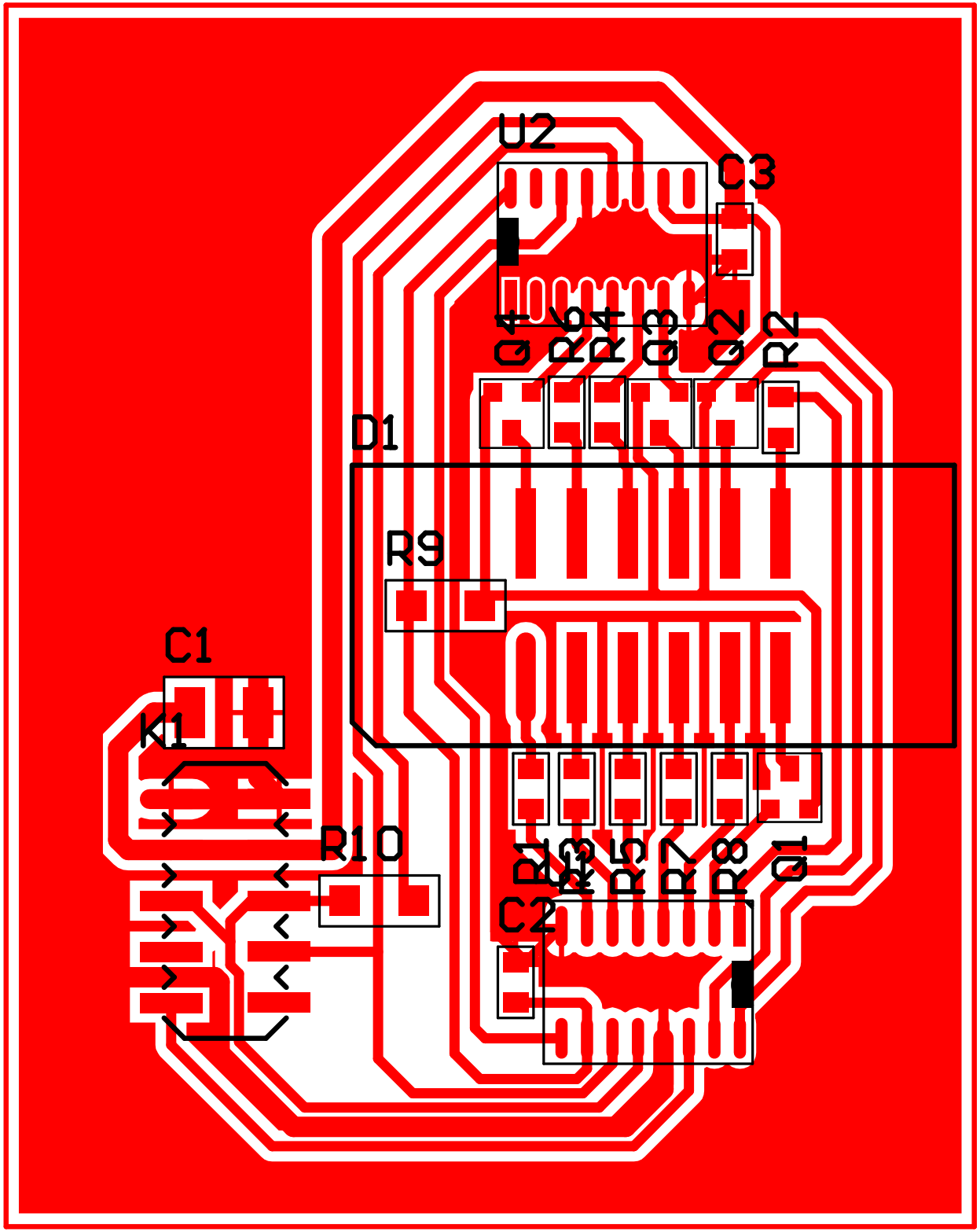
U2
C3
Q4
R6
R4
Q3
Q2
R2
D1
R9
C1
K1
R10
R1
R3
R5
R7
R8
Q1
C2