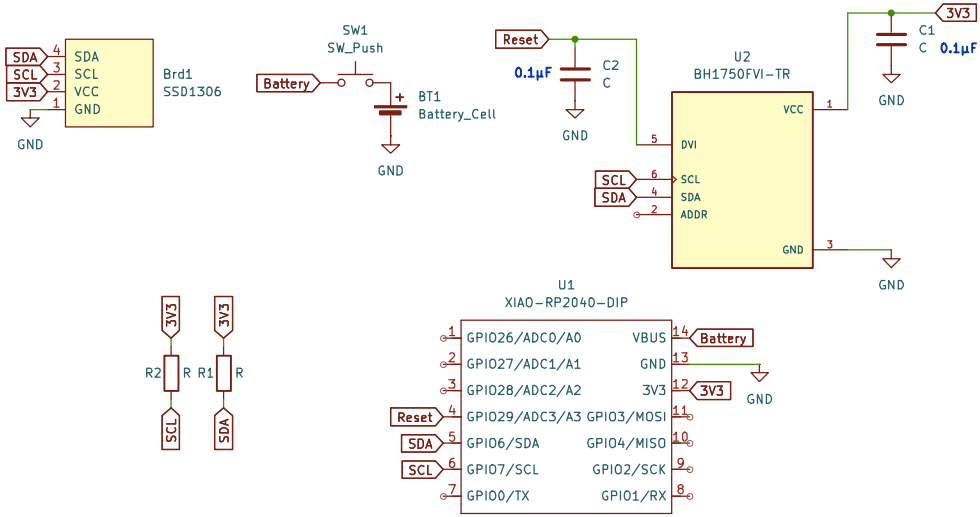

GB114

Sheet: /

File: Hermes.kicad_sch

Title: LuminanceMeter Schematic

Size: A5	Date: 2025-08-02	**Rev: V0.1**
KiCad E.D.A. 9.0.3		Id: 1/1