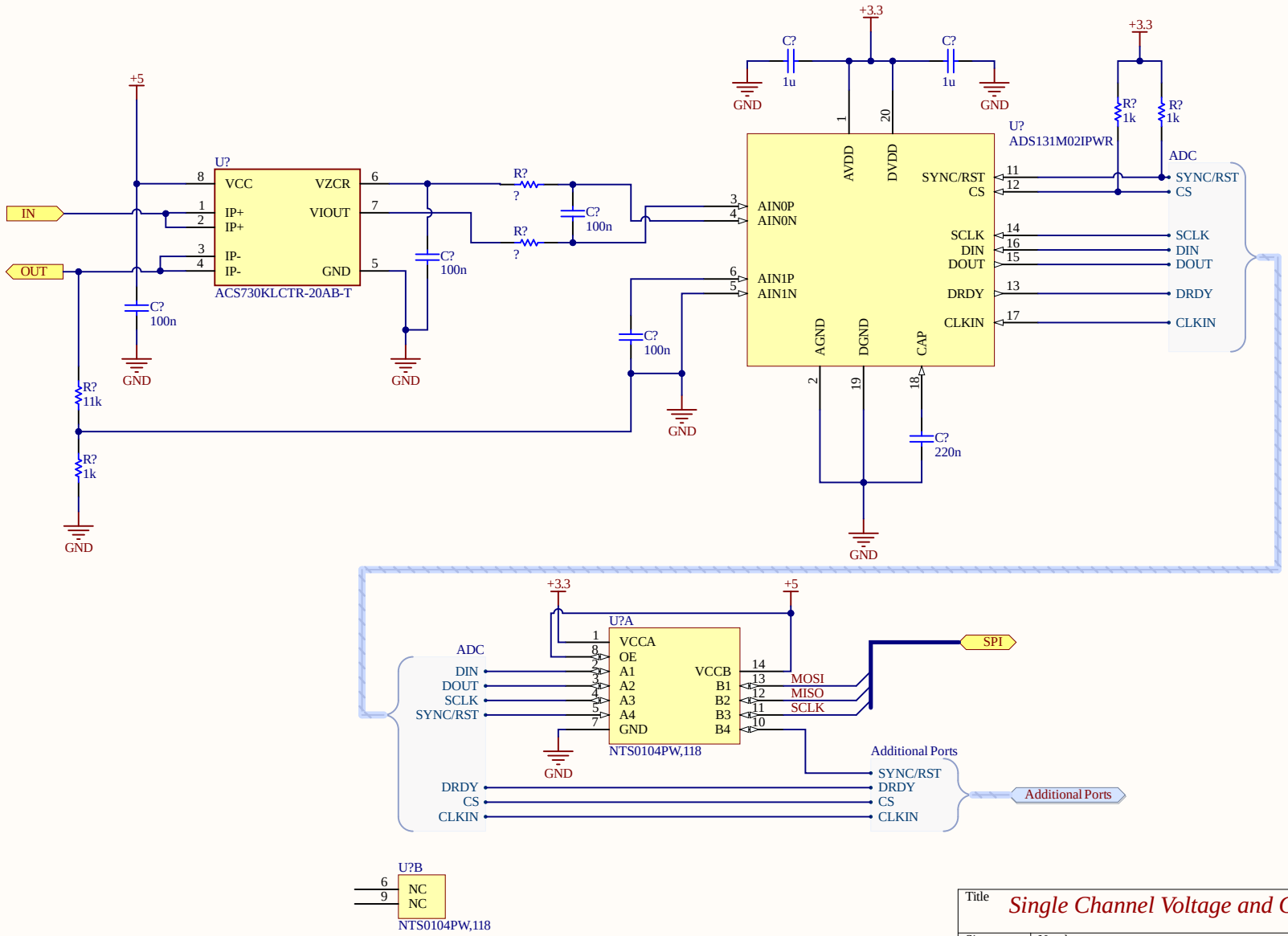

Title	*Single Channel Voltage and Current Sensor*	
Size A4	Number	Revision
Date: 7/17/2021		Sheet of
File: \\..\Sensing.SchDoc		Drawn By: