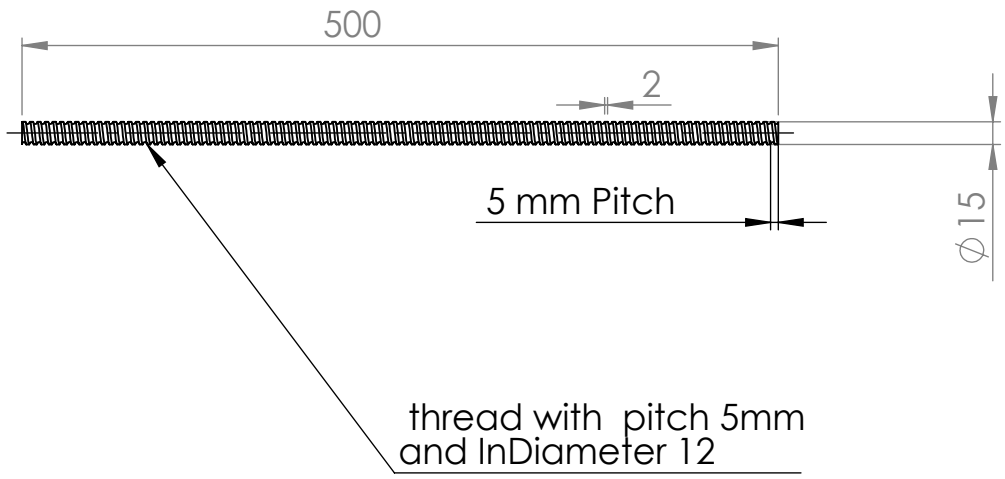

Item	Qty	Description	Material
1	1	Round 22 with L 500	Steel

Part List

Dept : Injection Molding Parts

Created By : Glia - Gaza

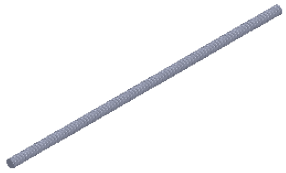

Approvrd By : Glia - Gaza

Size : mm
Scale 1:5

Rev : A4

Tittel : ballScrow

Sheet : 20/21

Date / 20/08/2019