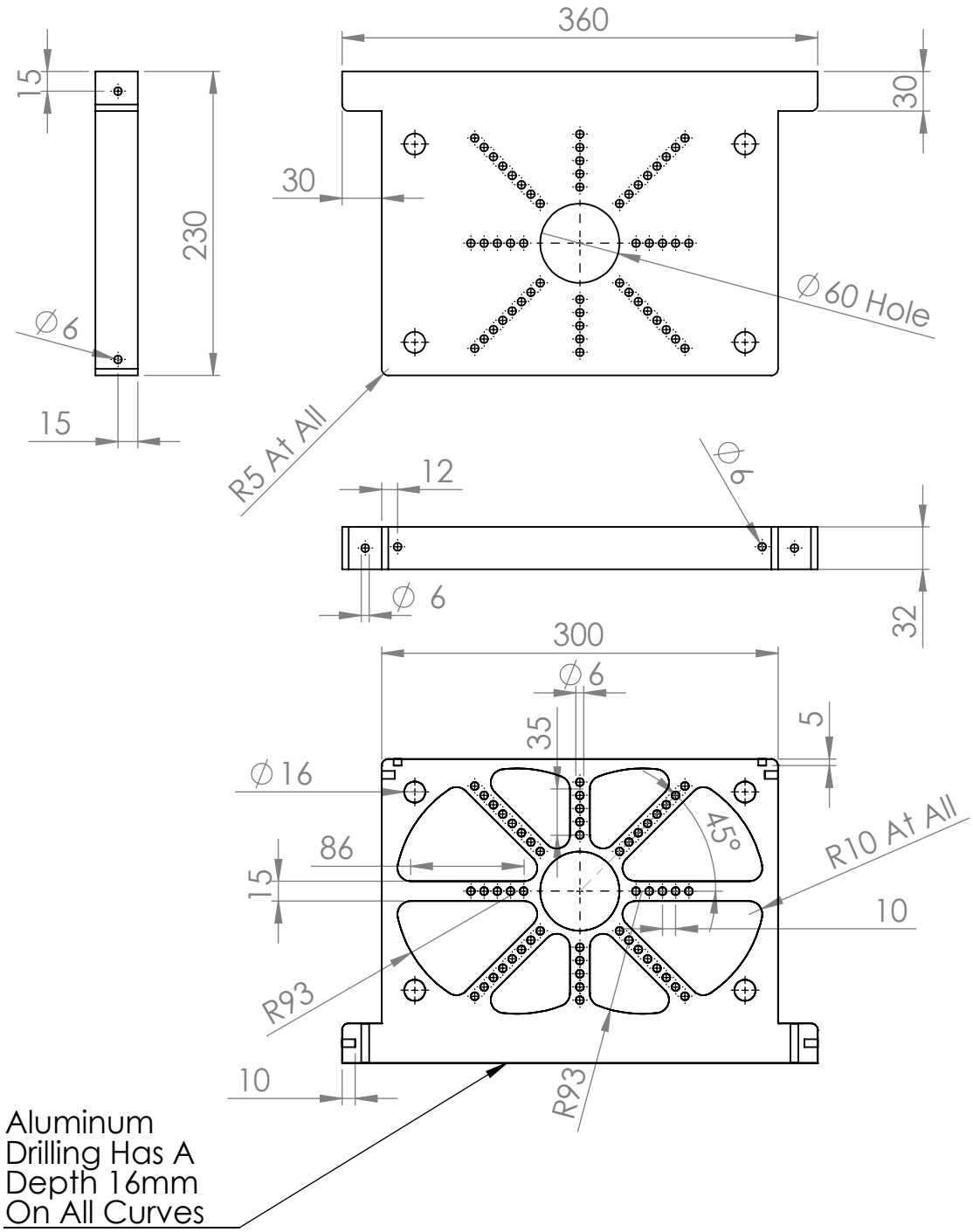

Item	Qty	Description	Material
1	1	Metal plate 300 X 200 X 32	Aluminum

Part List

Dept : Injection Molding Parts

Created By : Glia - Gaza

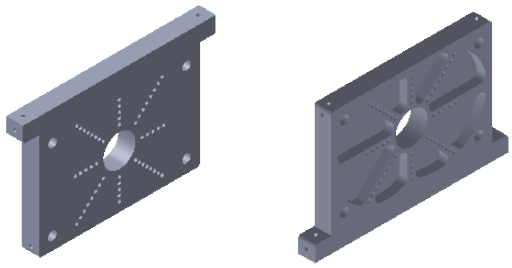

Approvrd By : Glia - Gaza

Size : mm
Scale 1:5

Rev : A4

Tittel : Frame 02

Sheet : 10/21

Date / 20/08/2019