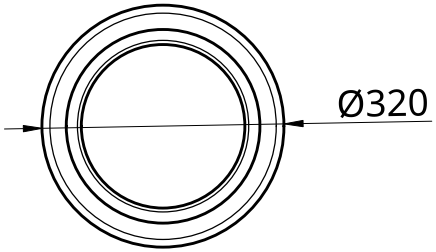

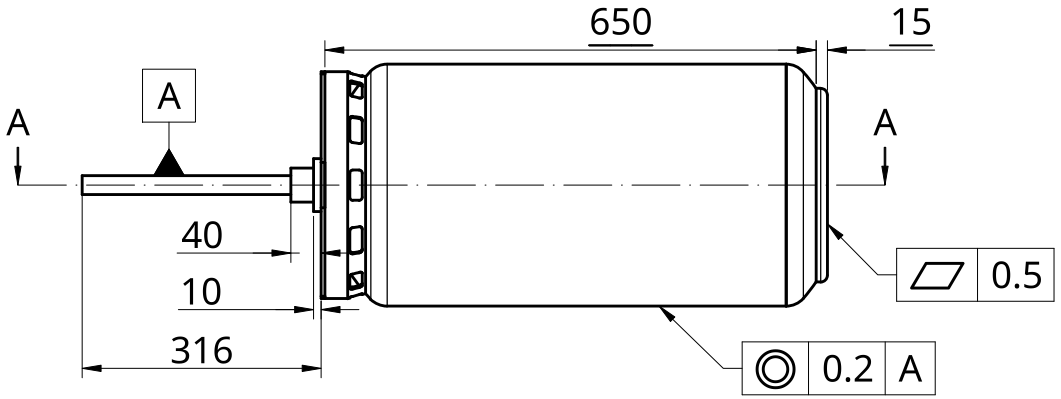

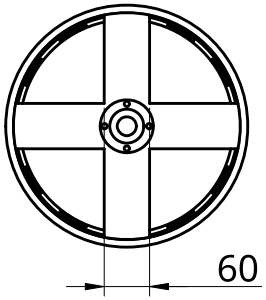

To use less material, a cross attachment was chosen. If available, a full circle sheet may also be used.

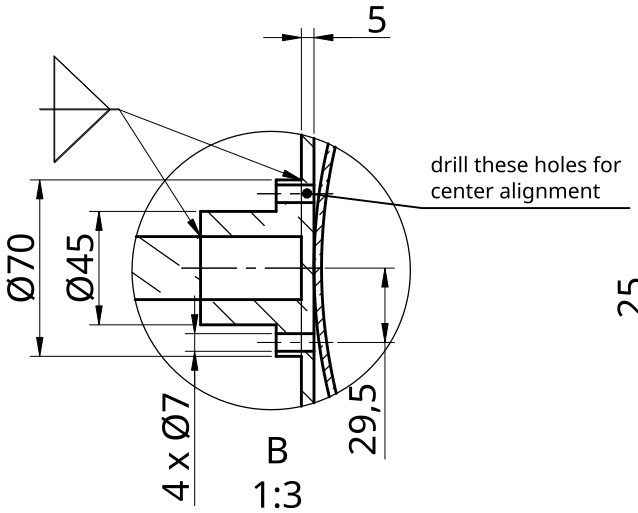

This is a suggested flange for attaching the 25mm shaft to the cylinder. If a different fitting flange or attachment mechanism is found it may also be used.

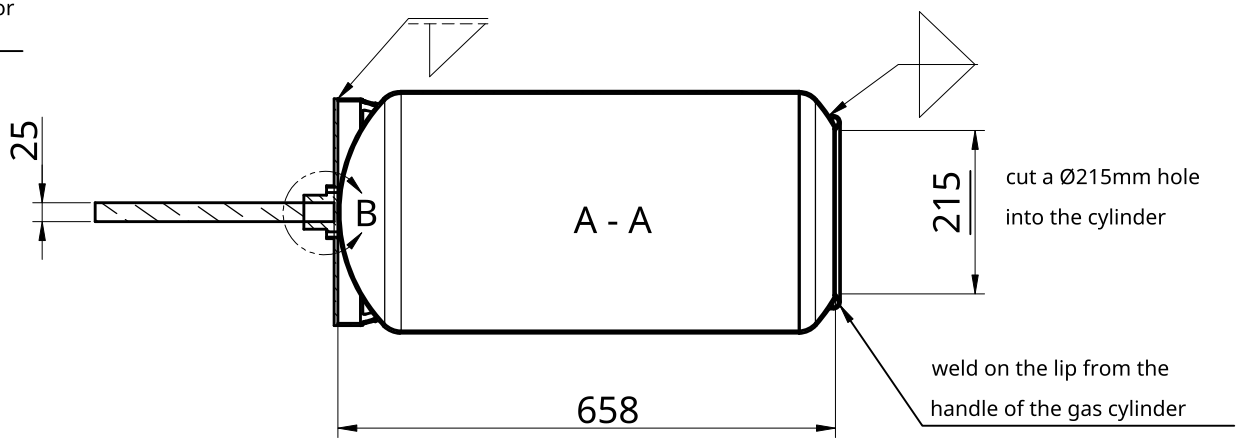

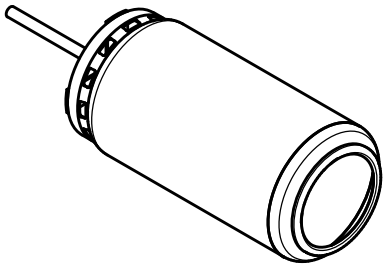

1:16

UNLESS OTHERWISE SPECIFIED, DIMENSIONS ARE IN MILLIMETERS ANGULAR = ± ° SURFACE FINISH		NAME	SIGNATURE	DATE
	DRAWN	EMMA STEINKE		2025-11-11
	CHECKED			
	APPROVED			
DO NOT SCALE DRAWING				
BREAK ALL SHARP EDGES AND REMOVE BURRS				
FIRST ANGLE PROJECTION	MATERIAL	steel	FINISH	

TITLE

Drum and Shaft

SIZE	DWG NO.	REV.
A4		

SCALE	WEIGHT	SHEET
1:10		1 of 1