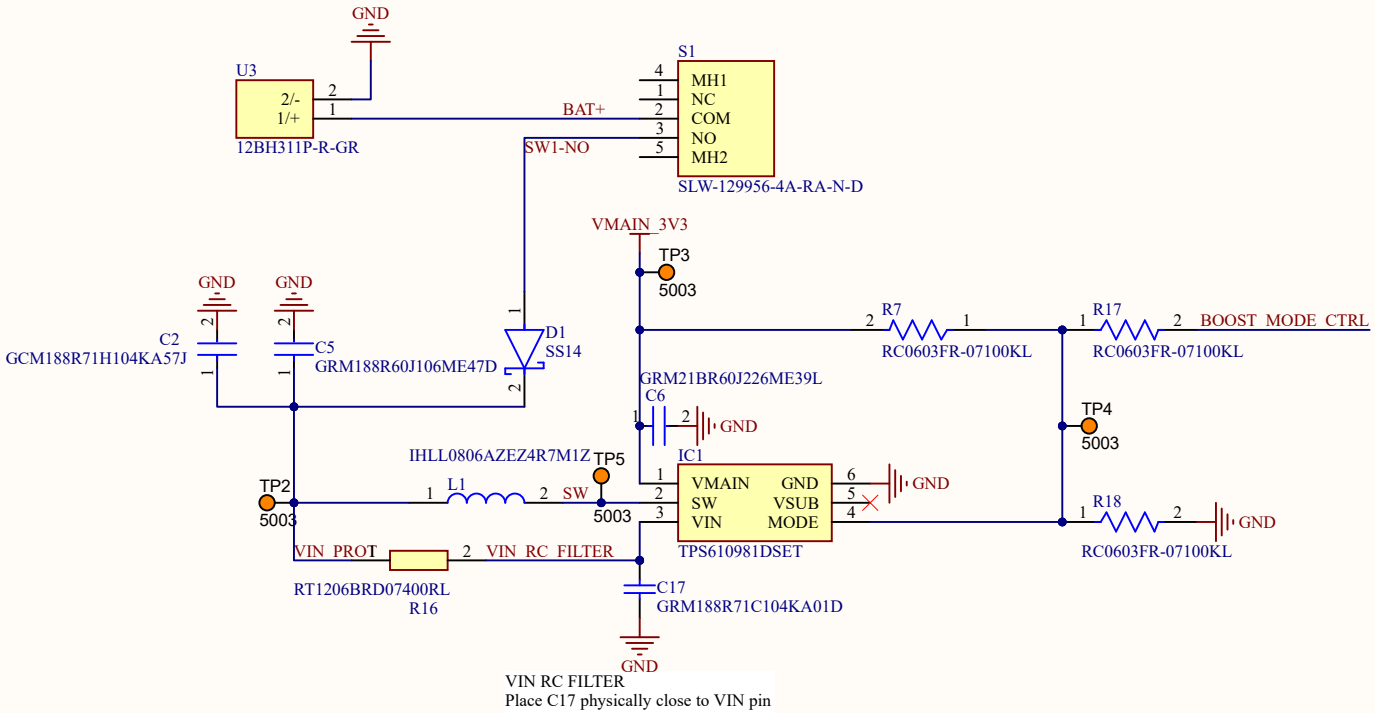

Title	Power_Supply.SchDoc	
Size A4	Number	Revision
Date: 5.26.2025		Sheet of
File: C:\Users\..\Power_Supply.SchDoc		Drawn By: