REVISIONS			
REV.	DESCRIPTION	DATE	APPROVED
A	INITIAL RELEASE	7/29/2024	J.PAOLINO
B	DRAWING TEMPLATE UPDATE	5/30/2025	O. RUIZ

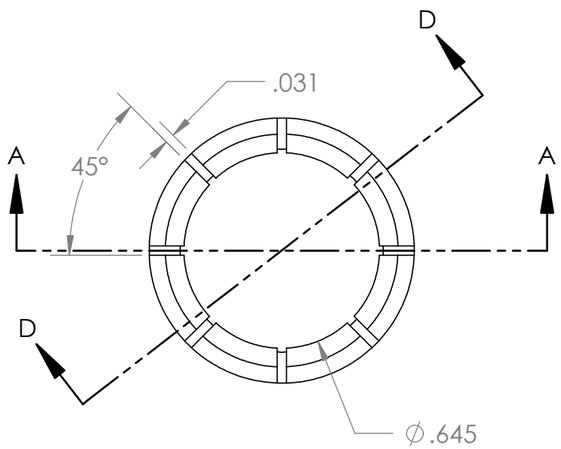

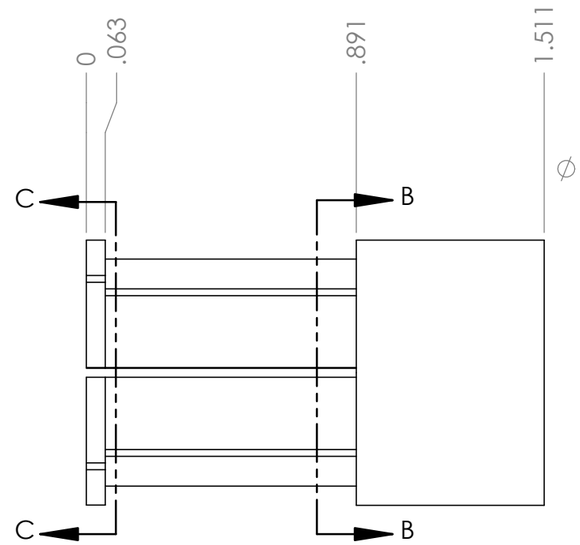

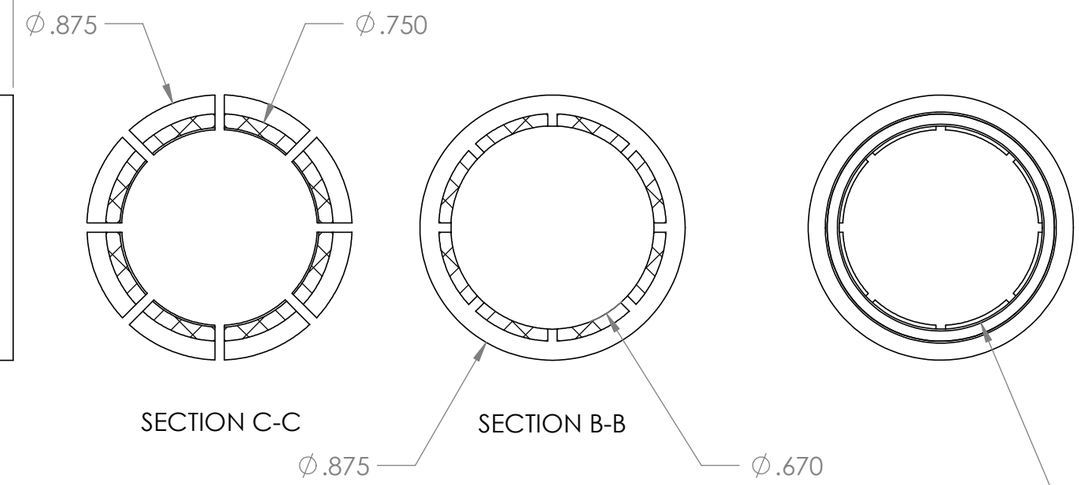

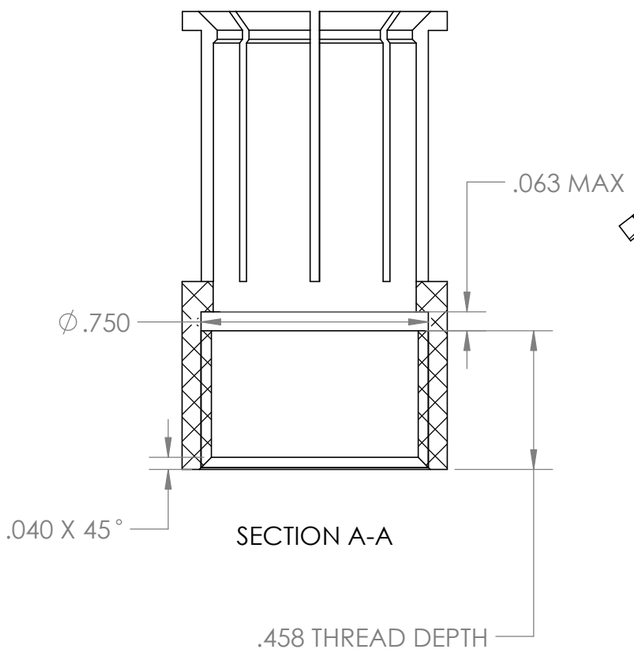

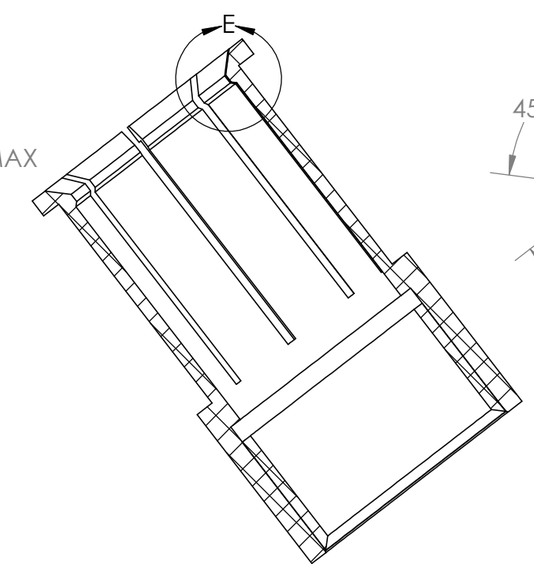

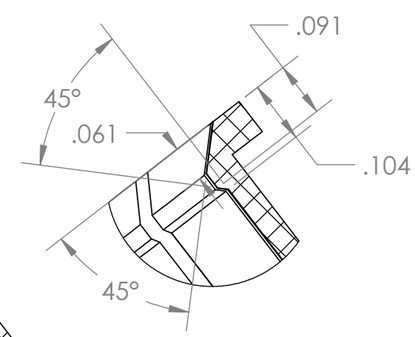

DETAIL E
SCALE 4 : 1

NOTES:
1. REMOVE ALL BURRS AND SHARP EDGES UNLESS OTHERWISE NOTED

GH+ Labs

PROPRIETARY AND CONFIDENTIAL
THE INFORMATION CONTAINED IN THIS DRAWING IS THE SOLE PROPERTY OF GLOBAL HEALTH LABS. REPRODUCTION IN PART OR AS A WHOLE WITHOUT THE WRITTEN PERMISSION OF GLOBAL HEALTH LABS IS PROHIBITED.

UNLESS OTHERWISE SPECIFIED
DIMENSIONS ARE IN INCHES
BREAK EDGES, .005-.010
BLEND ALL RADII, REMOVE ALL BURRS
SURFACE FINISH: 125 Ra MAX
ANGULAR: MACH: ±0°30', BEND: ±3°
ONE PLACE DECIMAL: ± .030"
TWO PLACE DECIMAL: ± .010"
THREE PLACE DECIMAL: ± .005"

INTERPRET GEOMETRIC TOLERANCING PER: ASME Y14.5 - 2009

DO NOT SCALE DRAWING

DRAWN	OFR	5/22/2025
APPROVED	CHN	5/27/2025

MATERIAL: BLACK DELRIN
FINISH:
PROJECT:
USED ON:

TITLE: GHL-1-20018
DESCRIPTION: SIMPLE SNAP CAP
SIZE: B
DWG. NO. GHL-1-20018
REV. B
DRAWING SCALE 2:1
SHEET 1 OF 1