REVISIONS			
REV.	DESCRIPTION	DATE	APPROVED
A	INITIAL RELEASE	4/24/2024	J.PAOLINO
B	GEOMETRY CHANGES	7/31/2024	J.PAOLINO
C	GEOMETRY CHANGES	9/30/2024	J.PAOLINO
D	DRAWING TEMPLATE UPDATE	5/30/2025	O.RUIZ

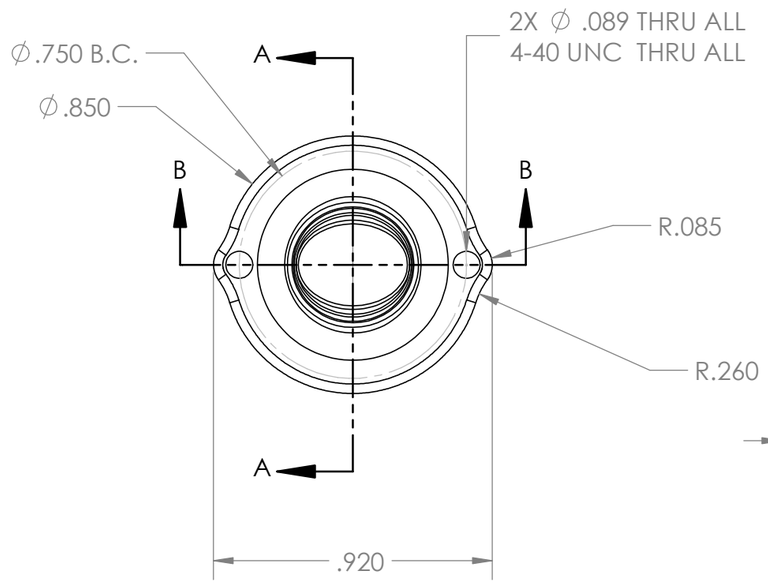

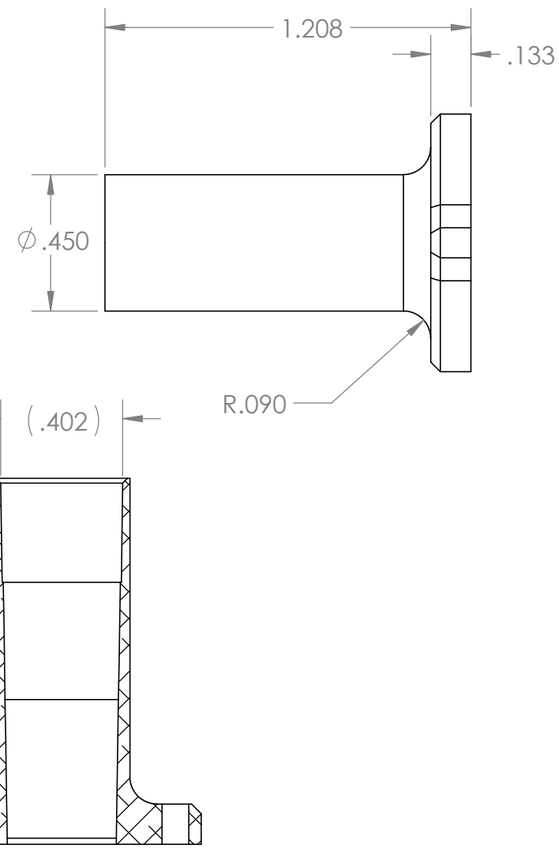

SECTION B-B

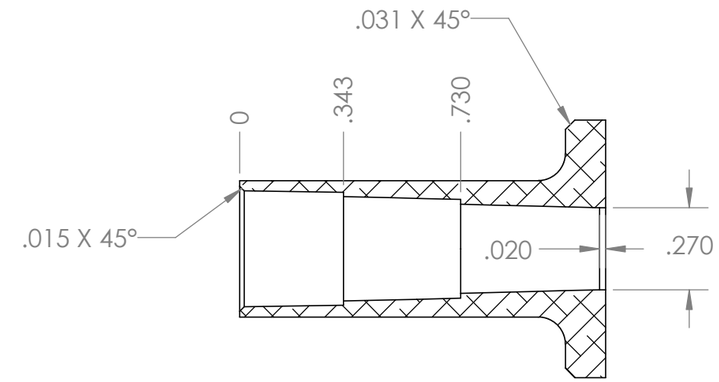

SECTION A-A

NOTES:

1. FABRICATE PER 3D DATA FILE HAVING THE SAME NUMBER AS SHOWN IN THE TITLE BLOCK TO ±0.004" UNLESS OTHERWISE SPECIFIED
2. REMOVE ALL BURRS AND SHARP EDGES
3. FINISH: CLEAR CHROMATE CONVERSION PER MIL-DTL-5541
4. FINISHED PART TO BE CLEAN AND FREE OF ALL FOREIGN MATERIAL

GH+ Labs

PROPRIETARY AND CONFIDENTIAL
THE INFORMATION CONTAINED IN THIS DRAWING IS THE SOLE PROPERTY OF GLOBAL HEALTH LABS. REPRODUCTION IN PART OR AS A WHOLE WITHOUT THE WRITTEN PERMISSION OF GLOBAL HEALTH LABS IS PROHIBITED.

UNLESS OTHERWISE SPECIFIED
DIMENSIONS ARE IN INCHES
BREAK EDGES, .005-.010
BLEND ALL RADII, REMOVE ALL BURRS
SURFACE FINISH: 125 Ra MAX
ANGULAR: MACH: ±0°30', BEND: ±3°
ONE PLACE DECIMAL: ± .030"
TWO PLACE DECIMAL: ± .010"
THREE PLACE DECIMAL: ± .005"

INTERPRET GEOMETRIC TOLERANCING PER: ASME Y14.5 - 2009

DO NOT SCALE DRAWING

DRAWN	OFR	5/22/2025
APPROVED	CHN	5/27/2025

MATERIAL: 6061 ALUMINUM

FINISH:

PROJECT:

USED ON:

TITLE: GHL-1-20007

DESCRIPTION: HEATER BLOCK

SIZE	DWG. NO.	REV.
B	GHL-1-20007	D

DRAWING SCALE 2:1 | SHEET 1 OF 1