REVISIONS			
REV.	DESCRIPTION	DATE	APPROVED
A	INITIAL RELEASE	10/21/2024	J.PAOLINO
B	DRAWING TEMPLATE UPDATE	5/30/2025	O.RUIZ

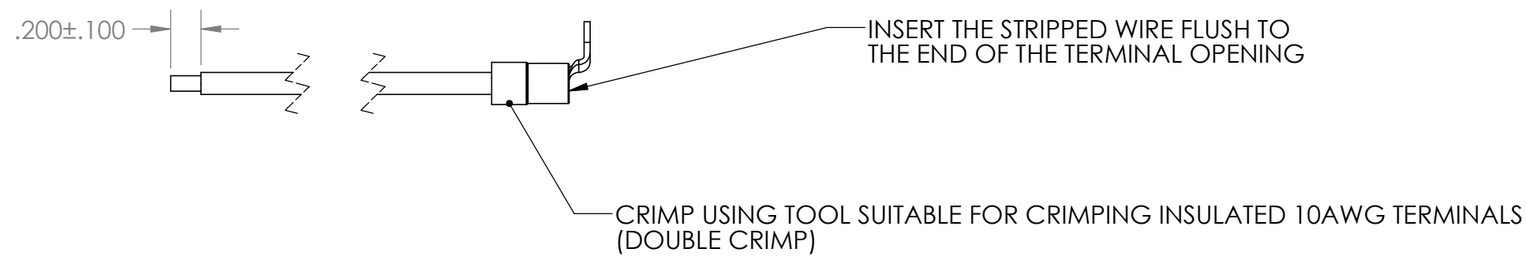

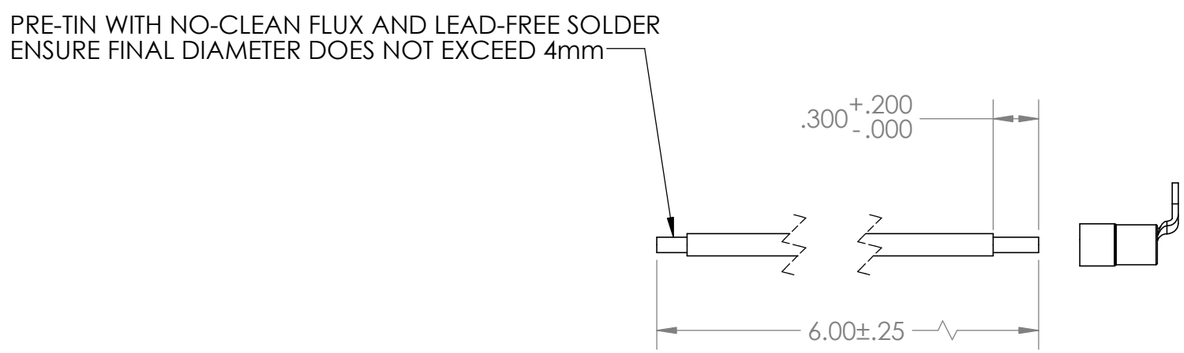

ITEM NO.	PART NUMBER	DESCRIPTION	QTY.
1	7113K219	TERMINAL	1
2	8054T19	10AWG FLEXIBLE STRANDED WIRE	1

GH+ Labs

PROPRIETARY AND CONFIDENTIAL
THE INFORMATION CONTAINED IN THIS DRAWING IS THE SOLE PROPERTY OF GLOBAL HEALTH LABS. REPRODUCTION IN PART OR AS A WHOLE WITHOUT THE WRITTEN PERMISSION OF GLOBAL HEALTH LABS IS PROHIBITED.

UNLESS OTHERWISE SPECIFIED
DIMENSIONS ARE IN INCHES
BREAK EDGES, .005-.010
BLEND ALL RADII, REMOVE ALL BURRS
SURFACE FINISH: 125 Ra MAX
ANGULAR: MACH: ±0°30', BEND: ±3°
ONE PLACE DECIMAL: ± .030"
TWO PLACE DECIMAL: ± .010"
THREE PLACE DECIMAL: ± .005"

INTERPRET GEOMETRIC TOLERANCING PER: ASME Y14.5 - 2009

DO NOT SCALE DRAWING

DRAWN	OFR	5/22/2025
APPROVED	CHN	5/27/2025

MATERIAL: NA

FINISH:

PROJECT:

USED ON:

TITLE: GHL-1-22003

DESCRIPTION: BUS BAR CABLE

SIZE: B | DWG. NO. GHL-1-22003 | REV. B

DRAWING SCALE 1:1 | SHEET 1 OF 1