REV.	DESCRIPTION	DATE	APPVD
A	INITIAL RELEASE	5/22/2025	OFR

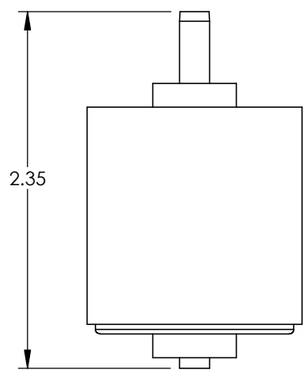

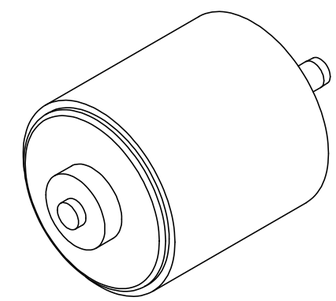

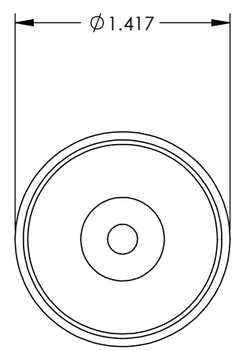

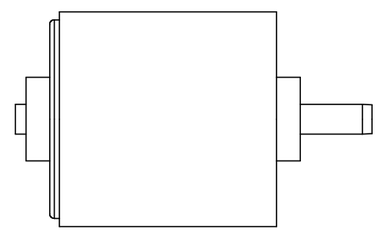

NOTES:
1. VENDOR: MOUSER
2. PN: DIX36B
3. VOLTAGE: 24VDC
4. TORQUE: 115mN-m
5. RPM: 7600

GH+ Labs

PROPRIETARY AND CONFIDENTIAL
THE INFORMATION CONTAINED IN THIS DRAWING IS THE SOLE PROPERTY OF GLOBAL HEALTH LABS. REPRODUCTION IN PART OR AS A WHOLE WITHOUT THE WRITTEN PERMISSION OF GLOBAL HEALTH LABS IS PROHIBITED.

UNLESS OTHERWISE SPECIFIED
DIMENSIONS ARE IN INCHES
BREAK EDGES, .005-.010
BLEND ALL RADII, REMOVE ALL BURRS
SURFACE FINISH: 125 Ra MAX
ANGULAR: MACH: ±0°30', BEND: ±3°
ONE PLACE DECIMAL: ± .030"
TWO PLACE DECIMAL: ± .010"
THREE PLACE DECIMAL: ± .005"

INTERPRET GEOMETRIC TOLERANCING PER: ASME Y14.5 - 2009

DO NOT SCALE DRAWING

DRAWN	OFR	5/22/2025
APPROVED	CHN	5/27/2025

MATERIAL: NA

FINISH: NA

PROJECT:

USED ON:

TITLE: DIX36B

DESCRIPTION: MOTOR

SIZE: B | DWG. NO. DIX36B | REV. B.1

DRAWING SCALE 1:1 | SHEET 1 OF 1