REVISIONS			
REV.	DESCRIPTION	DATE	APPROVED
A	INITIAL RELEASE	4/24/2024	J.PAOLINO
B	GEOMETRY CHANGES	7/31/2024	J.PAOLINO
C	GEOMETRY CHANGES	9/30/2024	J.PAOLINO
D	DRAWING TEMPLATE UPDATE	5/30/2025	O. RUIZ

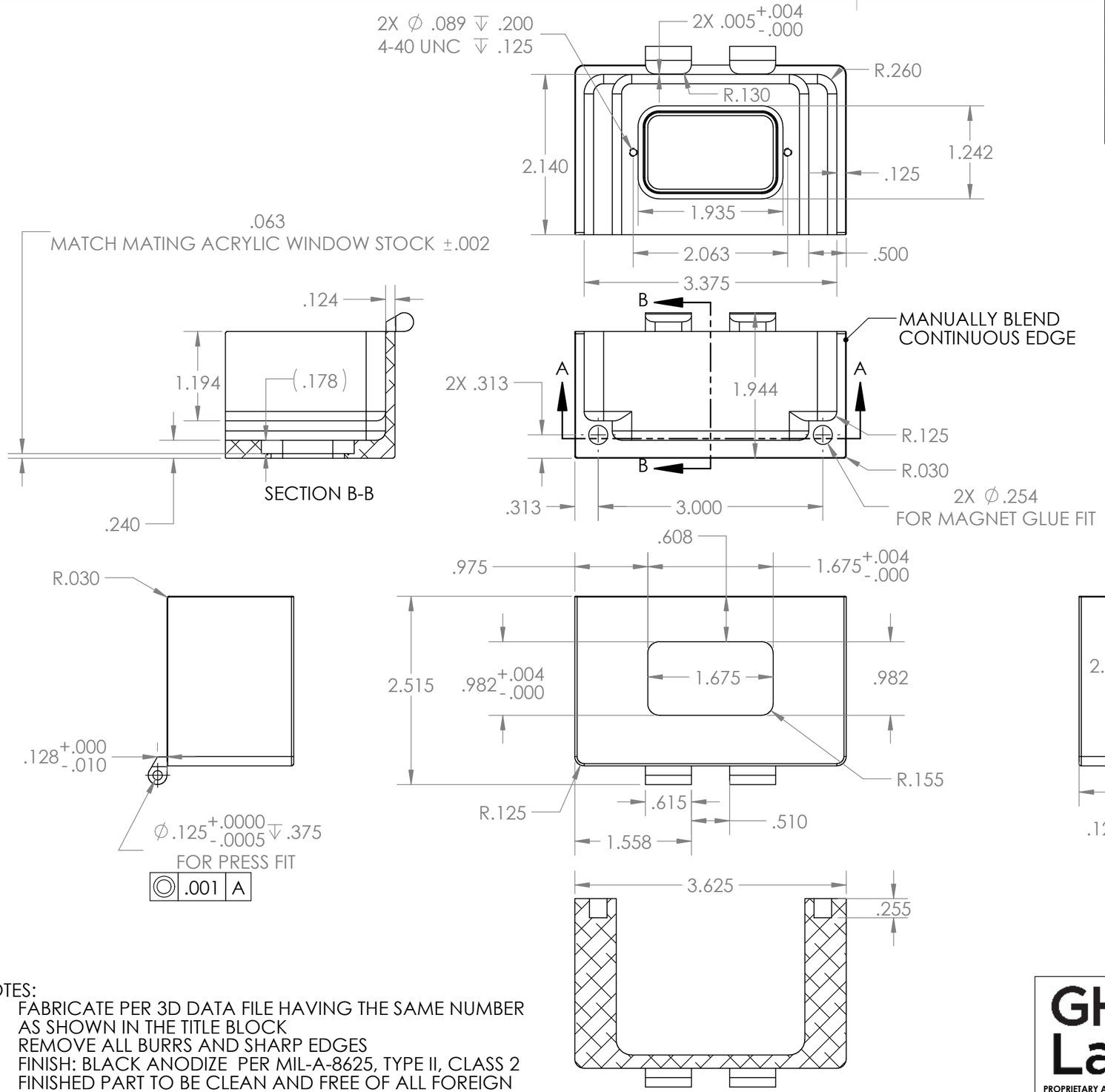

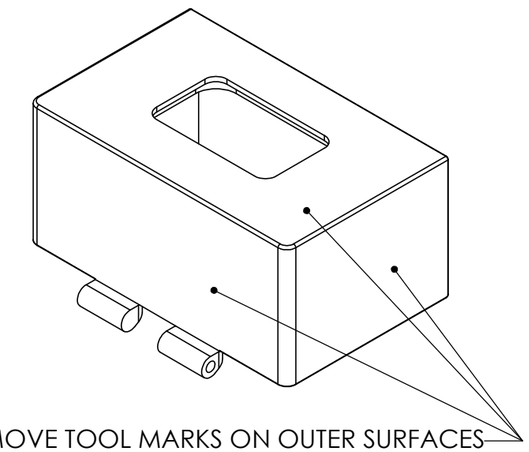

NOTES:
1. FABRICATE PER 3D DATA FILE HAVING THE SAME NUMBER AS SHOWN IN THE TITLE BLOCK
2. REMOVE ALL BURRS AND SHARP EDGES
3. FINISH: BLACK ANODIZE PER MIL-A-8625, TYPE II, CLASS 2
4. FINISHED PART TO BE CLEAN AND FREE OF ALL FOREIGN MATERIAL

GH+ Labs

PROPRIETARY AND CONFIDENTIAL
THE INFORMATION CONTAINED IN THIS DRAWING IS THE SOLE PROPERTY OF GLOBAL HEALTH LABS. REPRODUCTION IN PART OR AS A WHOLE WITHOUT THE WRITTEN PERMISSION OF GLOBAL HEALTH LABS IS PROHIBITED.

UNLESS OTHERWISE SPECIFIED
DIMENSIONS ARE IN INCHES
BREAK EDGES, .005-.010
BLEND ALL RADII, REMOVE ALL BURRS
SURFACE FINISH: 125 Ra MAX
ANGULAR: MACH: ±0°30', BEND: ±3°
ONE PLACE DECIMAL: ± .030"
TWO PLACE DECIMAL: ± .010"
THREE PLACE DECIMAL: ± .005"

INTERPRET GEOMETRIC TOLERANCING PER: ASME Y14.5 - 2009

DO NOT SCALE DRAWING

DRAWN	OFR	5/22/2025
APPROVED	CHN	5/27/2025

MATERIAL: 6061 ALUMINUM
FINISH:
PROJECT:
USED ON:

TITLE: GHL-1-20003
DESCRIPTION: SAMPLE TUBE ACCESS DOOR
SIZE: B
DWG. NO. GHL-1-20003
REV. D
DRAWING SCALE 2:3
SHEET 1 OF 1