REVISIONS			
REV.	DESCRIPTION	DATE	APPROVED
A	INITIAL RELEASE	4/25/2024	J.PAOLINO
B	MODIFIED FOR LARGER BEARING, ADDED OVAL FOR SHAFT	7/22/2024	J.PAOLINO
C	CHANGED MATERIAL, MODIFIED FOR TUBE RETAINER ADAPTER	7/31/2024	J.PAOLINO
D	GEROMETRY CHANGES	9/30/2024	J.PAOLINO
E	CHANGED BUSHING HOLE/SLOT DIMS	10/21/2024	J.PAOLINO
F	DRAWING TEMPLATE UPDATE	5/30/2025	O.RUIZ

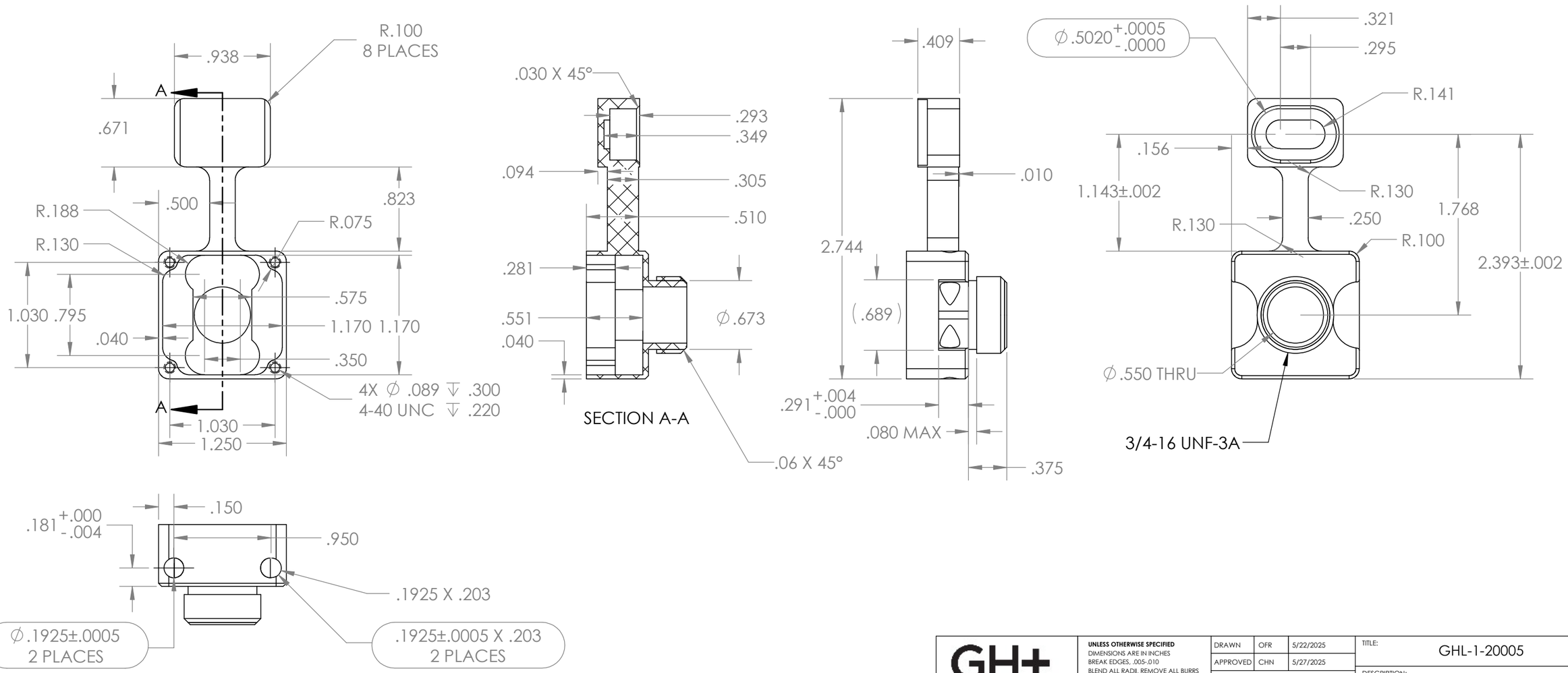

NOTES:

1. MATERIAL: DELRIN AF, 13% PTFE FILLED
2. REMOVE ALL BURRS AND SHARP EDGES UNLESS OTHERWISE NOTED
3. ALL UNSPECIFIED GEOMETRY SHALL BE CONTROLLED BY THE PART GEOMETRY FILE GHL-1-20005.SLDPRT TO ±0.005"

GH+ Labs

PROPRIETARY AND CONFIDENTIAL

THE INFORMATION CONTAINED IN THIS DRAWING IS THE SOLE PROPERTY OF GLOBAL HEALTH LABS. REPRODUCTION IN PART OR AS A WHOLE WITHOUT THE WRITTEN PERMISSION OF GLOBAL HEALTH LABS IS PROHIBITED.

UNLESS OTHERWISE SPECIFIED
DIMENSIONS ARE IN INCHES
BREAK EDGES, .005-.010
BLEND ALL RADII, REMOVE ALL BURRS
SURFACE FINISH: 125 Ra MAX
ANGULAR: MACH: ±0°30', BEND: ±3°
ONE PLACE DECIMAL: ± .030"
TWO PLACE DECIMAL: ± .010"
THREE PLACE DECIMAL: ± .005"

INTERPRET GEOMETRIC TOLERANCING PER: ASME Y14.5 - 2009

DO NOT SCALE DRAWING

DRAWN	OFR	5/22/2025
APPROVED	CHN	5/27/2025

MATERIAL: DELRIN AF, 13% PTFE FILLED

FINISH:

PROJECT:

USED ON:

TITLE: GHL-1-20005

DESCRIPTION: CARRIAGE

SIZE: B | DWG. NO. GHL-1-20005 | REV. F

DRAWING SCALE 1:1 | SHEET 1 OF 1