REV.	DESCRIPTION	DATE	APPVD
A	INITIAL RELEASE	5/22/2025	OFR

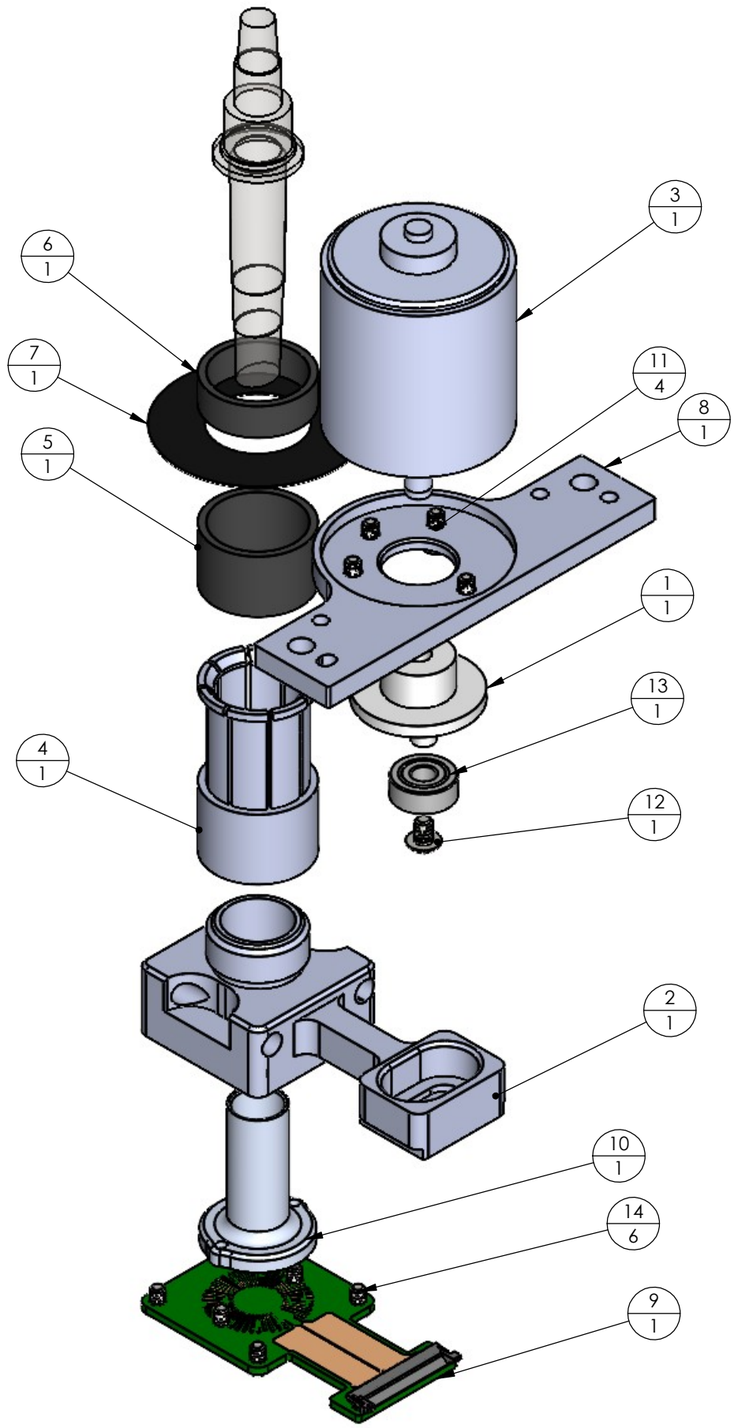

ITEM NO.	DESCRIPTION	MATERIAL	VENDOR	PART NUMBER	QTY
1	CRANK	1/2" HARD BRASS 360	GH LABS	GHL-1-20004	1
2	CARRIAGE	DELRIN	GH LABS	GHL-1-20005	1
3	MOTOR	NA	MOUSER	DIX36B	1
4	SNAP CAP	DELRIN	GH LABS	GHL-1-20018	1
5	INSULATOR SLEEVE	SILICONE	GH LABS	GHL-1-20023	1
6	TOP INSULATOR SLEEVE	SILICONE	GH LABS	GHL-1-20025	1
7	THIN BLOCKER	POLYESTER RESIN	GH LABS	GHL-1-20026	1
8	MOTOR BRACKET	6061-T6 ALUMINUM	GH LABS	GHL-1-20014	1
9	HEATER BOARD	NA	ODIC	-	
10	HEATER BLOCK	6061-T6 ALUMINUM	GH LABS	GHL-20007	1
11	SHCS M3 X 5mm	18-8 SS	MCMASTER CARR	91292A110	4
12	BHCS 6-32 X 3/16	18-8 SS	MCMASTER CARR	92949A143	1
13	BALL BEARING	440C SS	MCMASTER CARR	57155K374	1
14	BHCS 4-40 X 3/16	18-8 SS	MCMASTER CARR	92949A105	6

NOTES:
1. APPLY LOCTITE 222 TO ALL BOLTED CONNECTIONS UNLESS OTHERWISE SPECIFIED.

GH+ Labs

PROPRIETARY AND CONFIDENTIAL
THE INFORMATION CONTAINED IN THIS DRAWING IS THE SOLE PROPERTY OF GLOBAL HEALTH LABS. REPRODUCTION IN PART OR AS A WHOLE WITHOUT THE WRITTEN PERMISSION OF GLOBAL HEALTH LABS IS PROHIBITED.

UNLESS OTHERWISE SPECIFIED
DIMENSIONS ARE IN INCHES
BREAK EDGES, .005-.010
BLEND ALL RADII, REMOVE ALL BURRS
SURFACE FINISH: 125 Ra MAX
ANGULAR: MACH: ±0°30', BEND: ±3°
ONE PLACE DECIMAL: ± .030"
TWO PLACE DECIMAL: ± .010"
THREE PLACE DECIMAL: ± .005"

INTERPRET GEOMETRIC TOLERANCING PER: ASME Y14.5 - 2009

DO NOT SCALE DRAWING

DRAWN	OFR	5/22/2025
APPROVED	CHN	5/27/2025

MATERIAL: NA

FINISH: NA

PROJECT: SAMPLE PREP MODULE

USED ON: GHL-1-22000

TITLE: GHL-1-22002

DESCRIPTION: MOTOR SUB ASSEMBLY

SIZE: B | DWG. NO. GHL-1-22002 | REV. A

DRAWING SCALE 2:3 | SHEET 1 OF 1