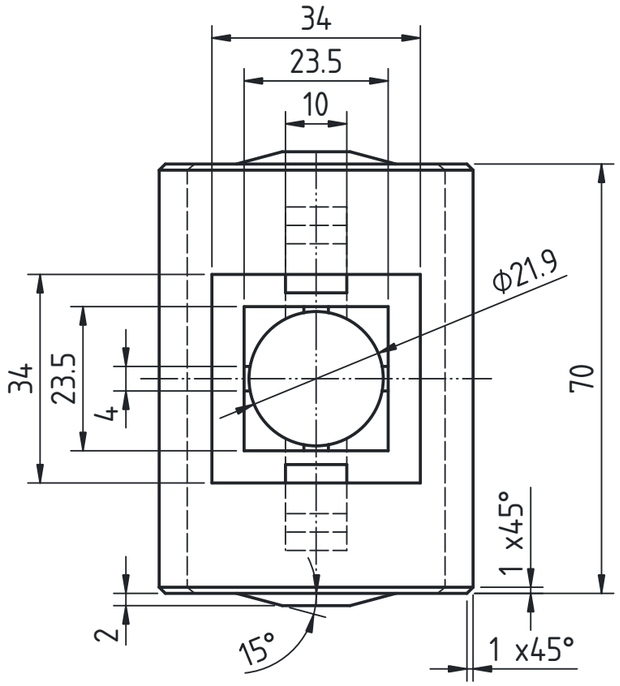

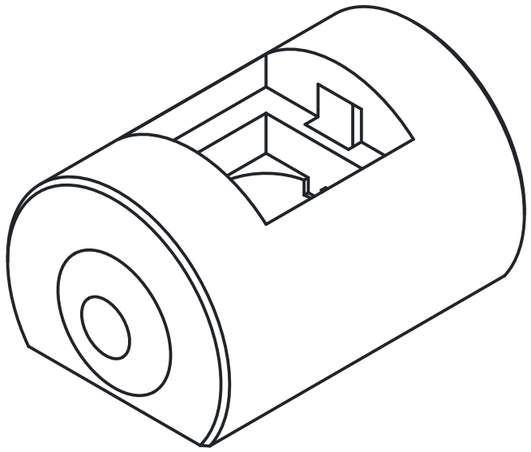

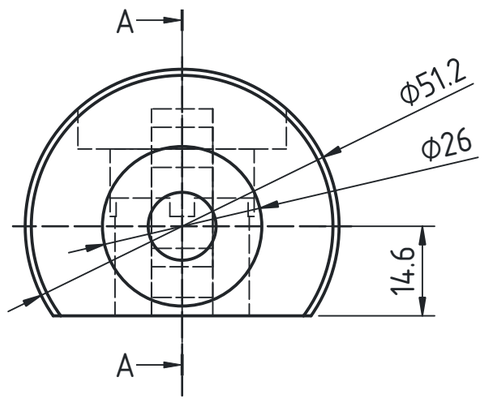

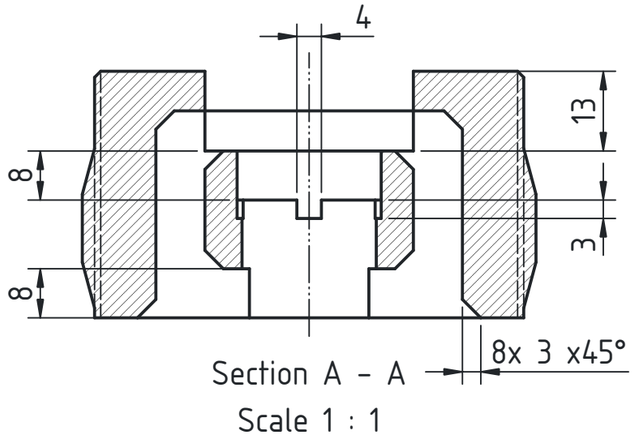

Section A - A
Scale 1 : 1

Changes:

- Cut off a section of the bottom to give room for wires
- Resesign of the top sensor pusher mechanism after getting good feedback (it now uses a spring)
- Overall design simplifications

DESIGNED BY: Alex Anastasakis		Head	
DATE: 2024-11-26		Course: Industrial Design for Game Hardware	
CHECKED BY: Alvaro Uribe Quevedo			
DATE: 2024-11-29			
SIZE A3			
SCALE 1 : 1	WEIGHT (kg) 0.036	DRAWING NUMBER 11	SHEET 1 / 1

This drawing is our property; it can't be reproduced or communicated without our written agreement.