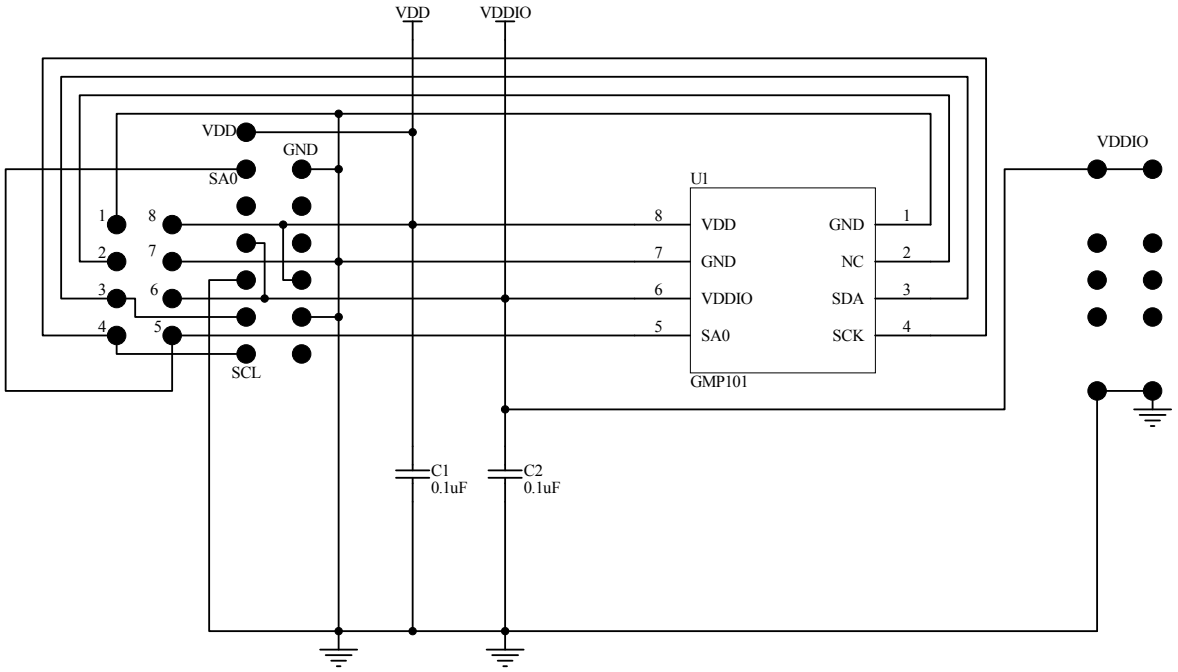

Title		
Size A4	Number	Revision
Date: 3-Nov-2015		Sheet of
File: Z:\D\GMEMS\SHEET\GMP101.SCH		Drawn By: