Translated from Chinese (Simplified) to English - www.onlinedoctranslator.com

MARk1

SERIES

Customized mobile chassis

User Manual

V1.0

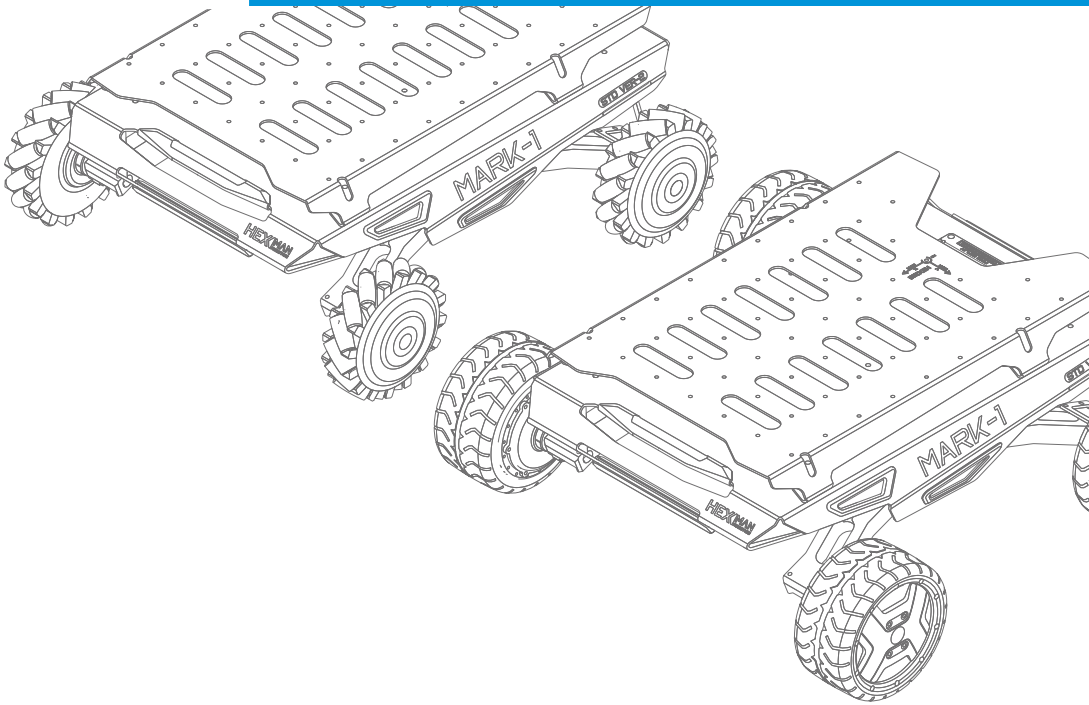

Important security information

• Please confirm the operating voltage, power, installation and other parameters of the equipment before use. Problems caused by exceeding the parameters are not covered by the warranty.

• Please assess the IP rating, temperature, and equipment suitability requirements of the environment in which you will be using the equipment. Problems caused by harsh environments are not covered under warranty.

This device does not provide stable safety features such as collision avoidance, drop protection, or bio-proximity warning. Please conduct a safety assessment of the integrated product.

The assessment must be conducted in accordance with relevant regulations and certifications to ensure that the developed products do not pose any major safety hazards.

Please read the relevant maintenance requirements to prevent irreversible damage caused by incorrect operation, such as over-discharging the battery or low tire pressure.

Low pressure can cause damage to the wheel hub, and lack of lubrication can lead to axle wear.

▪ For first-time use, please place the device in a safe, open environment without any loads, start it according to the operating instructions, and test all phases.

To disable this function, please contact the service personnel of the purchasing channel if you have any questions.

• In case of equipment malfunction or accident, please immediately use the emergency stop or turn off the power to avoid secondary damage, and contact relevant technical support.

Personnel should not disassemble it themselves.

Note: Damage caused by user-initiated disassembly, modification, abnormal use, or force majeure events such as natural disasters will not be covered under warranty.

This product assumes no responsibility for any safety incidents caused by user-integrated devices. Users are advised to conduct their own risk assessments and reliability tests.

Version update information

V1.0.0: Starting version

V1.0.1: Modified parameters, added remote control fine-tuning method, modified ROS package usage method.

V1.0.2: Added free mode to CAN protocol, updated manual layout.

V1.0.3: Modified remote control instructions and system support instructions.

V1.0.4: Added instructions for buzzer, linear offset, and wired control. V1.1.0: Updated device

parameters, corrected text errors, and modified communication instructions.

Table of contents

1. Basic Information.....5
1.1 Product Introduction.....5
1.2 Product List.....6
1.3 Performance Parameters.....6
1.4 Dimensional Parameters.....7
2. Functions and Operations.....9
2.1 Overview of the Architecture.....9
2.2 Electrical Interface Description.....9
2.3 Remote Control Instructions.....10
2.4 Data Cable Description.....10
2.5 Operating Instructions.....11
2.5.1 Pre-power-on checks.....11
2.5.2 Power-on Startup.....11
2.5.3 Remote Control.....11
2.5.4 Power Off System.....11
2.5.5 Charging.....11
2.5.6 Working Mode.....11
2.5.7 Buzzer.....12
2.5.8 Linear Offset.....12
2.5.9 Remote Control Procedure.....12
2.6 Charger User Manual.....13
3. Using Communication Control.....14
3.1 Control Method.....14
3.2 CAN Communication Protocol.....15
3.2.1 CAN Data Structure.....15
3.2.2 CANID of this device.....15
3.3 Serial Communication Protocol.....16
3.3.1 Basic Serial Port Parameters.....16
3.3.2 Serial Port Frame Structure.....16
3. Supporting Equipment and Software.....17
4.1 CAN-COM HUB User Manual.....17
4.1.1 HUB Connection Diagram.....17
4.2 XVIEW Chassis Testing System.....18

1.1 Product Introduction

MARK1 is a mobile chassis module with strong expandability, high passability, and excellent cost-effectiveness. This module features a left and right swing arm suspension system, can use Mecanum wheels and a differential system, is suitable for both indoor and outdoor use, and can overcome most obstacle courses. As a highly customizable product, MARK1 can accept certain special modifications by users and supports direct use of the underlying drive system, making it particularly suitable for machinery.

1.2 Product List

name	quantity
robot chassis	X1
Battery charger	X1
Aviation connector adapter cable (4-pin)	X1
Toolbox (optional)	X1
Remote control (optional)	X1
Packaging cartons	X1

1.3 Performance Parameters

project	MARK-DIFF	MARK-MCNM
size	584x617x233MM	584*532*231MM
Spin outer radius	415MM	378MM
ground clearance	132MM	132MM
Unloaded mass	22KG	22KG
Rated load	Asphalt surface25KG	ordinary wheat wheel25KGCustom Wheat Wheel50KG
Top speed	2.0M/S	3.0M/S
Maximum climbing angle	Fully loaded15°Unloaded40°	10°
Obstacle crossing at right angles	Unloaded90MM	Unloaded30MM
Sports Mode	Four-wheel differential	Mecanum Wheel System
brake	Electronic braking	Electronic braking
Working hours①	Depending on the actual working conditions3-5H	Depending on the actual working conditions3-5H
Motor parameters	4*250W	4*90W direct drive
encoder parameters	Simulated 4096 lines	4096 line
Battery parameters	24V/12.5AH	24V/12.5AH
Charging time	6H	5H
Power output	24V battery direct output	24V battery direct output
Communication interface	Standard CAN	Standard CAN
	(USB serial port optional)	(USB serial port optional)
Protection level	IP22	IP22
Operating temperature	0-40 degrees Celsius	0-40 degrees Celsius

① Note: The operating time is based on data measured at an average current of 1A.

1.4 Dimensional Parameters

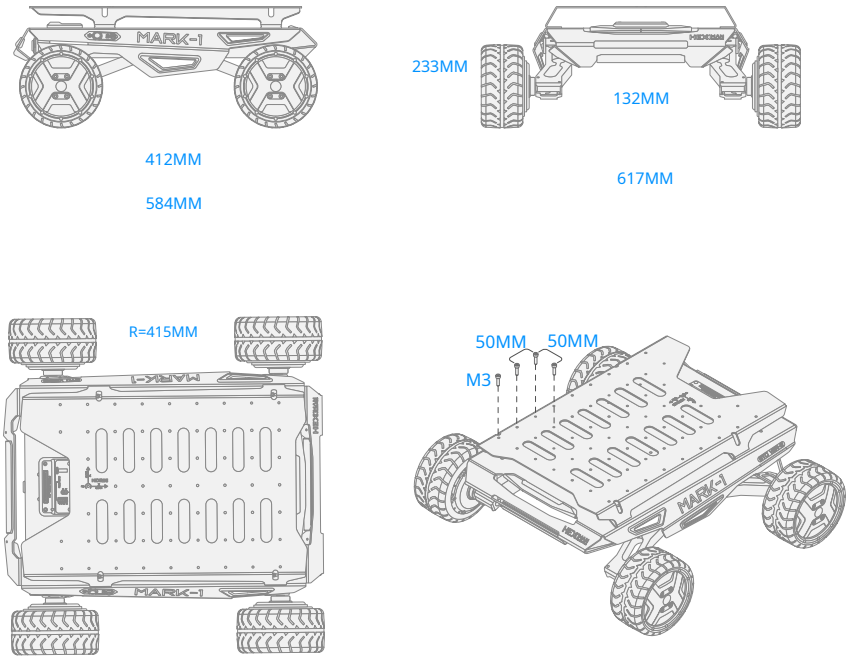

Figure 1.2 MARK1-DIFF Dimension Diagram

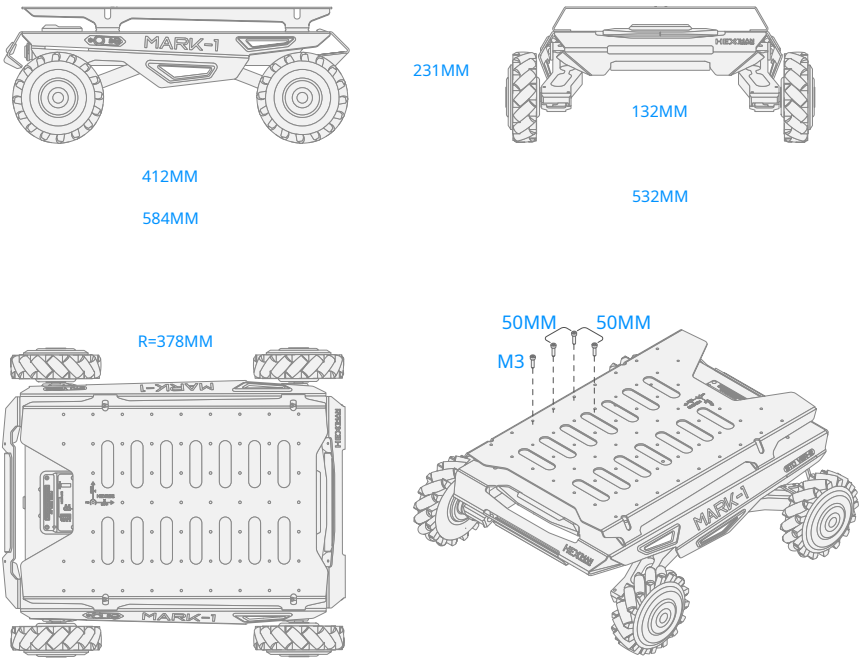

Figure 1.3 MARK1-MCNM Dimension Diagram

2.1 Overview of the Architecture

This section will provide a basic introduction to the chassis, enabling users and developers to gain a fundamental understanding of it.

Figure 2.1 below shows an overview view of the entire mobile robot chassis.

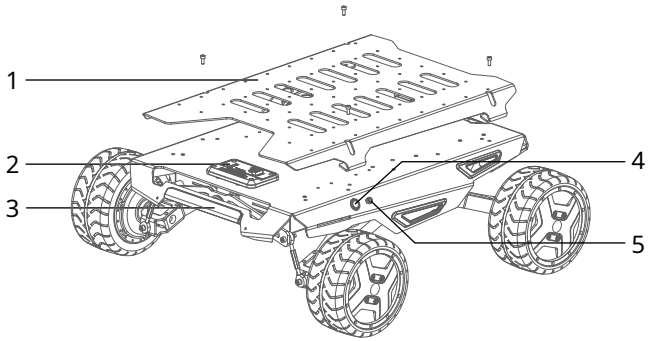

1. Extension stand
2. Electrical panel
3. Handles for carrying
4. Power switch
5. Charging port

Figure 2.1 Overview view

2.2 Electrical Interface Description

The rear electrical interface is shown in Figure 2.2. 1 is the power display; 2 is the CAN communication and 24V power supply expansion port. 3 is the power output port; 4 is a fuse.

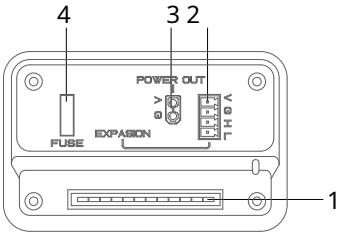

1. Power indicator LED
2. 4PIN expansion interface
3. XT30 power output interface
4. Fuse

Figure 2.2 View of the electrical panel

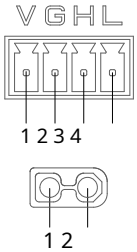

Pin number	Pin type	Pin Function	Remark
1	power supply	VCC	Positive power supply (20V~29.4V)5A MAX
2	power supply	GND	Power supply negative
3	CAN	CAN-H	CAN bus high
4	CAN	CAN-L	CAN bus low

Figure 2.3 External Interface Pin Diagram

2.3 Remote Control Instructions

The remote control is an optional accessory for the chassis product. Customers can choose to use it according to their actual needs. The chassis can be easily controlled with the remote control. In this product, we use the left hand to move forward, backward and horizontally, and the right hand to rotate clockwise and counterclockwise. The definition and function can be found in Figure 2.4.

The function of the button is defined as follows:

SWA: Operating mode; top for free mode, motor power off; middle for remote control mode; bottom for CAN control mode. SWC: Brake control; top for holding brake, bottom for releasing brake.

SWD: Speed mode; top for 25% speed mode, middle for 50% speed mode; bottom for full speed mode. S1: Throttle stick, controls chassis forward, backward, and left/right movement.

S2: Spin joystick, controls the chassis to rotate clockwise or counterclockwise.

POWER: Power button. Short press to turn on, long press to turn off.

ADJUST: Joystick fine-tuning button, used only during calibration.

The remote control has the highest priority. When the remote control is activated, the chassis prioritizes the control mode selected by SWA and ignores CAN commands.

model

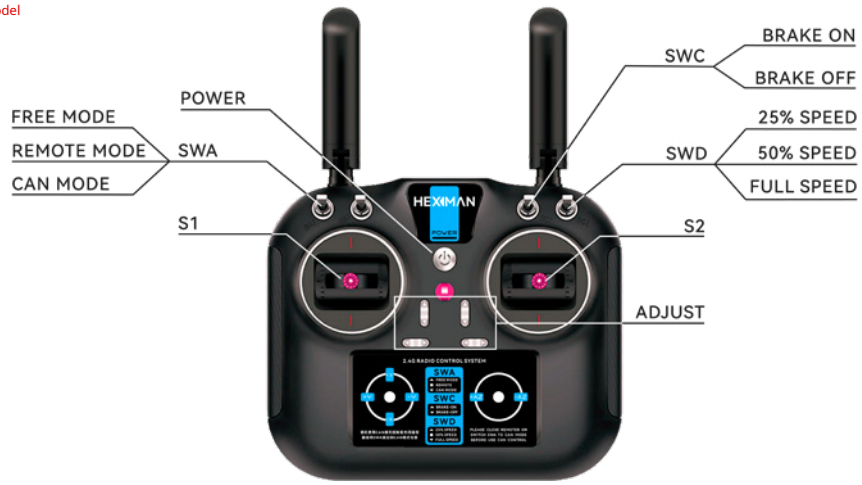

Figure 2.4 Remote Control Function Diagram

2.4 Data Cable Description

The chassis uses a four-pin connector for external communication.Make sure the equipment is properly connected before connecting anything else to prevent short circuits.(Machine damage caused by misoperation) Not covered under warranty)

Wire harness color	Wire harness function	Remark
red	VCC	Maximum current 5A, do not overload.
black	GND	
yellow	CAN_H	
green/blue	CAN_L	

2.5 Operating Instructions

2.5.1 Pre-power-on test

1) Check the chassis condition. Inspect the chassis for any obvious abnormalities; if any are found, please contact after-sales support. (For the first test, please turn off the chassis drive wheels)

(Suspended to avoid triggering collision sensors)

2.5.2 Power on

1) Press the power switch button on the side of the chassis (see 4 in Figure 2.1) Under normal circumstances, the power button indicator light will illuminate, the battery level display will show the start-up status, and the circ

The electrical panel displays the battery percentage via a strip light.(It is normal for the battery to not be fully charged when it leaves the factory.).

2) The chassis enters the self-test program. After 3 seconds, the buzzer sounds three times, and the motor is enabled (manually push the chassis with damping). The robot starts up and waits.

Receive instructions.

2.5.3 Remote Control

1) Ensure the SWA switch on the remote control is set to the top position. Press and hold the POWER button (see Figure 2.4). At this moment, the buzzer on the remote control sounds.

The remote control is used to turn on the device.

2) Move the SWA lever to the middle position to enter remote control mode. At this time, the remote control communicates with the chassis.(Confirm that the chassis is powered on)3) If there is a brake, please move SWC to the lower position and release the brake.

4) Move the rocker arm S1 up and down to move forward and backward, and left and right to move horizontally (unique to Mailun). S2 has spins on both sides.

5) If the test is successful, you can switch the SWD switch to the lower position to switch to full speed mode. Please continue using it in an open environment. 6) Move the SWA switch to the top position, press and hold the POWER button, and turn off the device using the remote control.

7) If the remote control is offset(The chassis moved even though the joystick was not moved) Please use the ADJUST fine-tuning joystick to zero point, and press and hold the fine-tuning button.

The adjustment amount can be continuously increased.

2.5.4 Power off

1) Press the power switch button on the appliance panel (see 4 in Figure 2.1). All indicator lights on the panel turn off, and the motor releases.

2.5.5 Charging

1) Ensure the chassis is in a stopped and power-off state.

2) Insert the charger plug into the DC port on the side of the vehicle (see 5 in Figure 2.1). Note: The battery takes approximately 4 hours to fully charge. It is fully charged when the charger indicator light changes from red to green.Please ensure that the device is being charged in an area where people are present.

2.5.6 Working Mode

Work mode	Effect
Standby mode	The motor starts the servo, does not accept control, and feeds back chassis information.
Free Mode	The motor is off its private server and can be pushed freely without being controlled; it provides feedback on chassis information.
Remote control mode	The motor starts as a servo, controlled by a remote, and provides feedback on chassis information.
CAN mode	The motor starts as a servo, controlled by CAN commands, and feeds back chassis information.

2.5.7 Buzzer

Vehicle-mounted buzzers are used for equipment alarms and special function reminders. They can be activated automatically or manually via a protocol. The beeping pattern can help quickly troubleshoot chassis issues; please refer to the table below for specific correspondences.

Function	Startup	Low battery reminder	Low battery error message (manual or special function)		System error
cycle	One-time use	5s	1s	2s	2s
Step 1	2KHz/100ms	4KHz/100ms	4KHz/100ms	2KHz/100ms	4KHz/100ms
Step 2	3KHz/100ms	2KHz/100ms	2KHz/100ms	4kHz/100ms cycle number corresponding to the number of times Note	
Step 3	4KHz/100ms	Silent until the end of the cycle	Silent until the end of the cycle	Silent until the end of the cycle	Silent until the end of the cycle

Note: Please refer to the table below for the correspondence between the number of beeps per cycle for system errors. For error details, please refer to the error message.

System error buzzer beep count per cycle				
frequency	1 time	2 times	3 times	4 times
Error Type	Motor failure	Drive failure	Communication failure	Other faults

2.5.8 Linear Offset

The straight-line deviation of the chassis is affected by many factors, and is generally controlled within 50cm over 10m. If the deviation is too large, the following measures can be taken: 1) Check whether the ground is level. Potholes and slopes can cause deviation.

2) Check if the tire casing is normal. Severe wear and foreign objects can cause changes in diameter. 3) Check if the speed is too fast or the acceleration/deceleration is too large during testing. Please test at a low and constant speed. 4) Check if there is uneven load, which will cause different degrees of shock absorption compression. You can remove the load during testing.

2.5.9 Wired Control Procedure

If using CAN or serial port to control the chassis, the following steps or instructions are required.

1) Connect the CAN-COM HUB according to the wiring requirements (this step is required when using serial port control). 2) Wait for the chassis to start; after the start buzzer sounds, proceed to the next step. 3) Ensure the remote control is off or switched to CAN mode.

4) Enable device (general setting command)

5) Switch to CAN mode (chassis status setting command)

6) Start moving (chassis motion control command)

2.6 Charger Instructions

Lithium battery chargers provide different charging voltages depending on the number of battery cells in the series. Common specifications are 7 cells (29V), 6 cells (25V), and the industry-standard 13 cells (54V). Please select the correct charger; we recommend using the charger that came with your device. Please contact customer service if you have any questions.

Work indicator light:

Not charging or fully charged

Charging

Precautions

1. Please make sure to check that the charging voltage is correct.The charging voltage of the device will be marked on the device nameplate..

2. Please ensure that the device is being charged in an area where people are present, and disconnect the power when leaving the area.

3. Please start charging after the device is paired with the charging point. Do not use the device while charging.

4. Chargers and equipment should be kept away from bedrooms, free from flammable materials, and kept dry.

5. The charger uses a 220V AC input power supply. Please ensure that the input voltage is stable.

6. The continuous charging time for a single charge should not exceed 8 hours. If the charger overheats, charging should be stopped immediately.

Using the wrong charger can cause irreversible damage to the battery. Please check the charging voltage on the device nameplate before use.

This product assumes no responsibility for consequences resulting from user misuse of the charger or prolonged unsupervised charging. Users are advised to conduct their own risk assessments and reliability tests.

3.1 Control Method

3.1.1 CAN Control

The chassis currently supports direct CAN control. Please connect a CAN analyzer, CAN converter, or industrial computer with CAN functionality to the chassis output interface. For protocol details, please refer to the CAN communication protocol section.

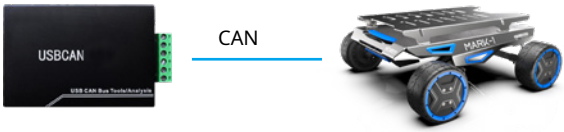

3.1.2 Serial Port Control

Serial port control requires a CAN-COM HUB as a converter to connect to the industrial computer. See details for further information.CAN-COM HUB User Manual. On a PC platform, the included XVIEW testing system can be used for chassis debugging via serial port. Work, details to be reviewedXVIEW Chassis Testing System Chapter.

3.1.2 ROS Control

ROS control requires the use of CAN-COM. The HUB connects to the industrial control computer and controls the chassis via a serial port.We provide open source The ROS driver package XROS.

XROS is a functional driver package that includes a chassis and accessories, helping users quickly use our various devices and products on the ROS platform, reducing the amount of large-scale development work. This code package supports the full set of XSTD protocol standards. Please contact customer service to obtain the development package and usage instructions. You need to install the Ubuntu operating system and the ROS robot operating system yourself before use.

The ROS packages are compatible with the following ROS and ROS2 versions. Please refer to the following for usage instructions.XROS User Manual.

Note: XROS requires a CAN-COM HUB as a serial port conversion device. Please contact customer service for more technical support.

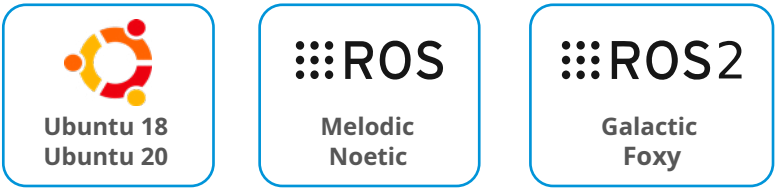

3.2 CAN Communication Protocol

3.2.1 CAN Data Structure

The product uses CAN2.0B (extended frame) for CAN communication. The communication baud rate is 500K.

CAN ID encoding standard:

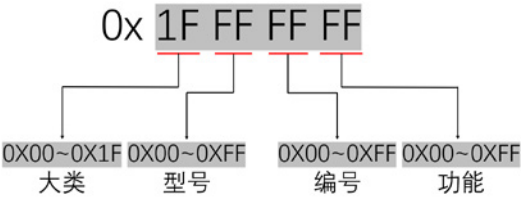

CAN data bits: Byte[0]~Byte[7]:

Byte[0]	Byte[1]	Byte[2]	Byte[3]	Byte[4]	Byte[5]	Byte[6]	Byte[7]

The CAN information used by CAN is the CANID and CAN_DATA mentioned above, totaling 12 bytes of data. When using, the needle

Perform corresponding CAN_DATA data transmission for different CANIDs.

In CANID, the category and model are fixed parameters of the device and their values will not change. The number defaults to 1. When multiple devices of the same type are used at the same time, they can be modified through general commands. Please refer to the instructions for details.XSTD chassis standardized communication protocol.

CAN data frames					
Data bits	ID[3]	ID[2]	ID[1]	ID[0]	DATA[0~7]
Data types	unsigned int8	unsigned int8	unsigned int8	unsigned int8	8 x unsigned int8
Data Description	Major Categories	model	serial number	Function	8-byte CAN data

3.2.2 CANID of this device

This equipment is a fixed category 01

MARK1-DIFF model number is E1
MARK1-MCNM model number E2

Default number 01

The MARK1-DIFF CANID fixed format is as follows: 01 E1 01 XX

The MARK1-MCNM CANID has a fixed format. 01 E2 01 XX

Please replace the example CANID in the communication protocol manual with the CANID above. Please use the specific function code for XX.

For alternative function codes, please refer to the XSTD communication protocol manual.

3.3 Serial Communication Protocol

The serial communication protocol is a packaged encapsulation of the CAN protocol, adding a frame header, frame length, frame ID, and checksum. Instruction details Please refer to the section and use cases.XSTD Chassis Standardized Communication Protocol

3.3.1 Basic Serial Port Parameters

project	parameter
baud rate	460800
check	No verification
Data bit length	8
Stop bit	1

3.3.2 Serial Port Frame Structure

To simplify system design and improve system reusability, the serial port bytes 3-14 are kept consistent with the ten-bit data used in the CAN protocol. The start bit, frame length, and frame ID are set to default values. The checksum is the sum of the first 15 bytes, with the last byte being the value of the checksum.

data.

Data Definition	HEAD	LEN	DATA[0-11]	FRAME_ID	SUM
Data types	Uint8	Uint8	12*Uint8	Uint8	Uint8
illustrate	0x55	0x10	12-bit CAN message data Serial port messages are for CAN Message encapsulation	Frame ID can be fixed or fixed. Accumulation, as a continuous number According to the sequence stamp	The accumulation of the first 15 items Sum and then take the least significant digit. Uint8 data

Serial port data bits	DATA[0]	DATA[1]	DATA[2]	DATA[3]	DATA[4~11]
CAN data bits	ID[3]	ID[2]	ID[1]	ID[0]	DATA[0~7]
Data types	Uint8	Uint8	Uint8	Uint8	8 x Uint8
Data Description	Major Categories	model	serial number	Function	8-byte CAN data

For serial port usage examples, please refer to the XSTD communication protocol manual. When using this device, please replace the example CANID with the device's CANID.

The verification sum (SUM) can be quickly calculated using XVIEW's COM Assistant. For commands and usage steps, please refer to the drive-by-wire procedures in this manual.

4.1.1 HUB Connection Diagram

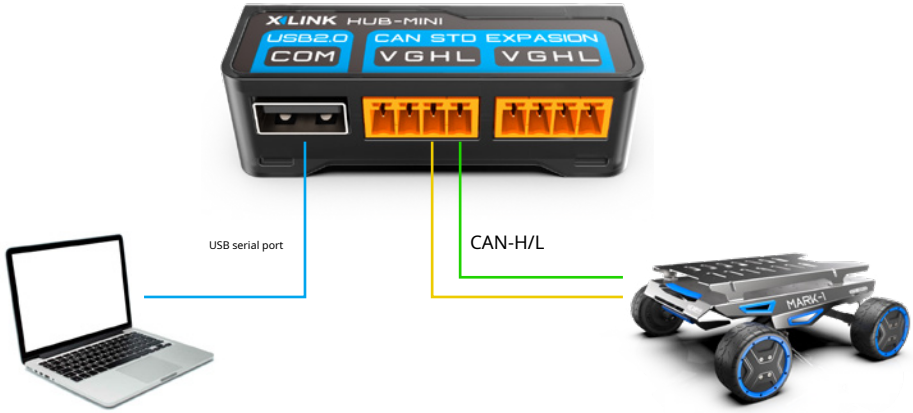

Figure 4.1 Example of HUB connection

4.2 XVIEW Chassis Testing System

This system is a human-computer interaction software designed for debugging and development. It can test the chassis's movement capabilities online and provide real-time feedback on robot data, as well as monitor devices such as remote controllers and drives. This system requires the use of a CAN-COM HUB; otherwise...

Please contact customer service if you have a HUB. The usage steps are as follows:

1. Download the driver package CP210x_Universal_Windows_Driver.

https: //www.si labs.com/documents/publ ic/sof tware/ CP210x_Universal_Windows_Driver.zip

2: Connect the devices via the HUB module (see Figure 4.1 for details). The HUB module buzzer sounds three times. start up.

3: Power on the chassis. In the XVIEW interface, switch to the chassis window, select the COM port, and click Connect. At this time, the Enable Device button will be highlighted. Click Enable Device to communicate with the chassis.

For detailed instructions on using XVIEW, please click the instructions button at the top of the software.

Figure 4.2 Explanation Interface

Figure 4.3 Brief Overview

Figure 4.4 Detailed Data

Figure 4.5 Chart Monitoring

HEXMAN ROBOTICS

Qiyuan Robotics (Dongguan) Co., Ltd.

WWW.HEXMAN.CN

TEL: +86-0769-22678912 078112

MOBIL: +86-18662867127