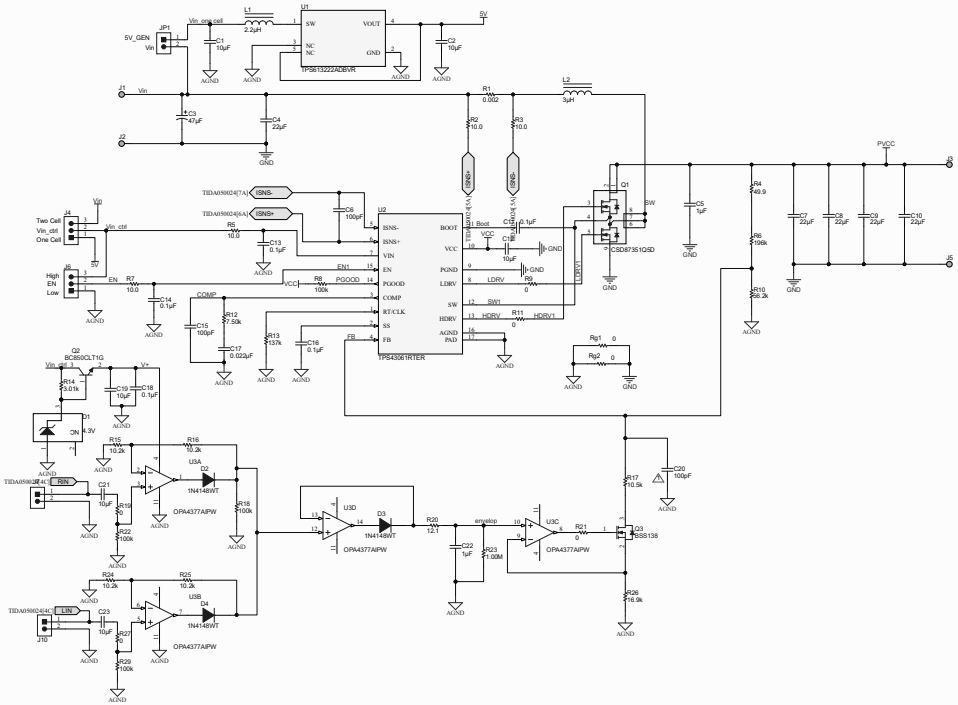

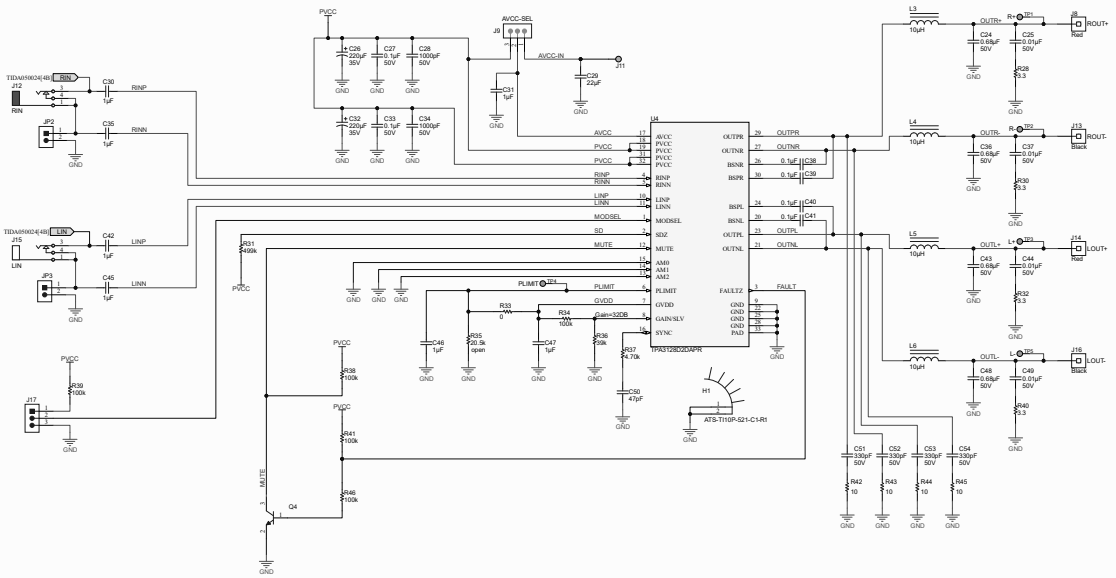

Title		
TIDA050024		
Size	Number	Revision
A1	1	01
Date: 6.25.2024		Sheet of
File: C:\Users...\TIDA050024.SchDoc		Drawn By: Balroki