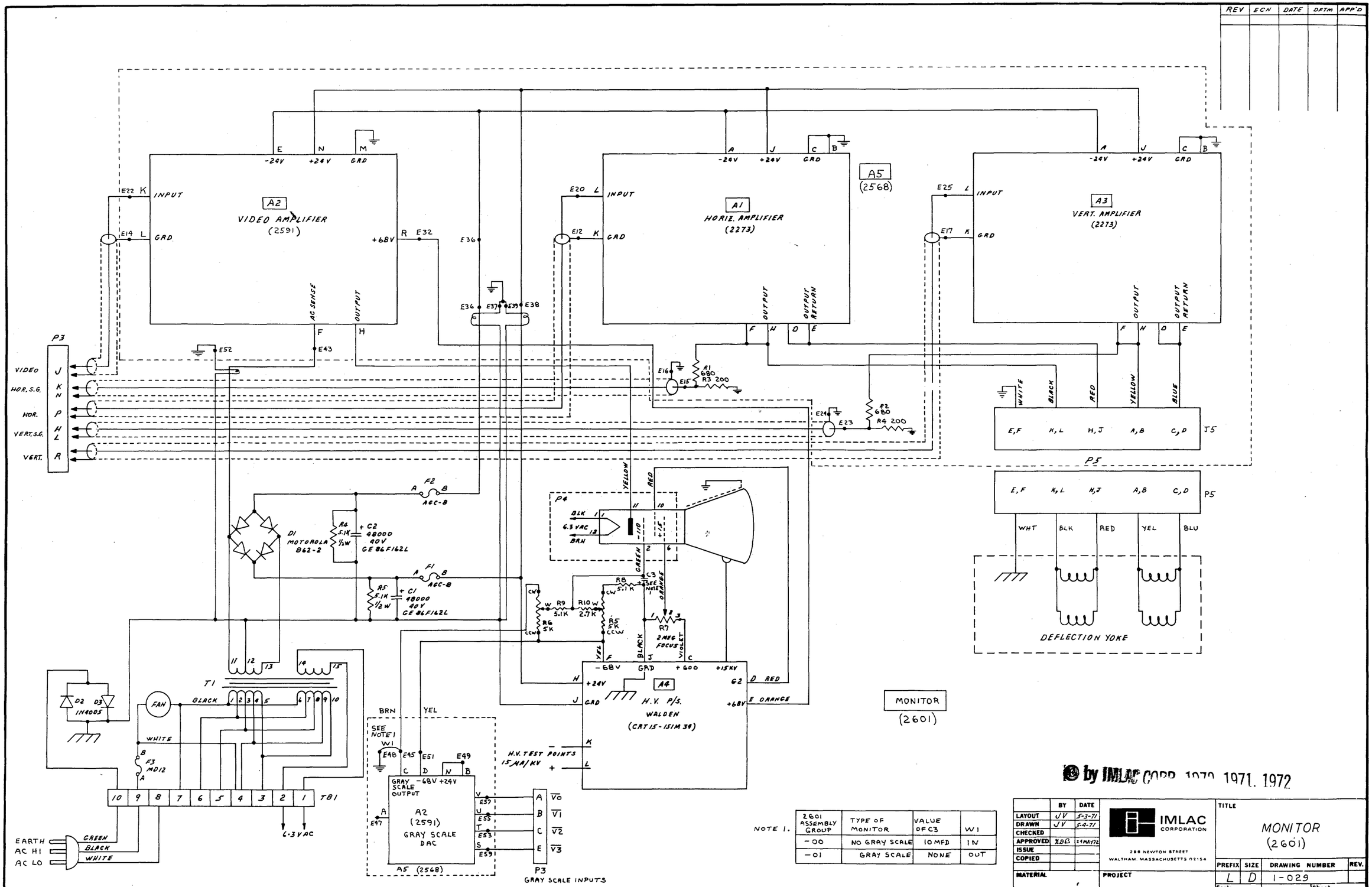

NOTE 1.

2601 ASSEMBLY GROUP	TYPE OF MONITOR	VALUE OF C3	W1
-00	NO GRAY SCALE	10 MFD	IN
-01	GRAY SCALE	NONE	OUT

© by IMLAC CORP. 1970, 1971, 1972

	BY	DATE
LAYOUT	JV	5-3-71
DRAWN	JV	5-4-71
CHECKED		
APPROVED	XBB	24MAY72
ISSUE		
COPIED		
MATERIAL		

IMLAC CORPORATION
298 NEWTON STREET
WALTHAM, MASSACHUSETTS 02154

PROJECT

TITLE: MONITOR (2601)

PREFIX	SIZE	DRAWING NUMBER	REV.
L	D	1-029	

Scale | Sheet

REV	ECN	DATE	DFTMN	APPVD.

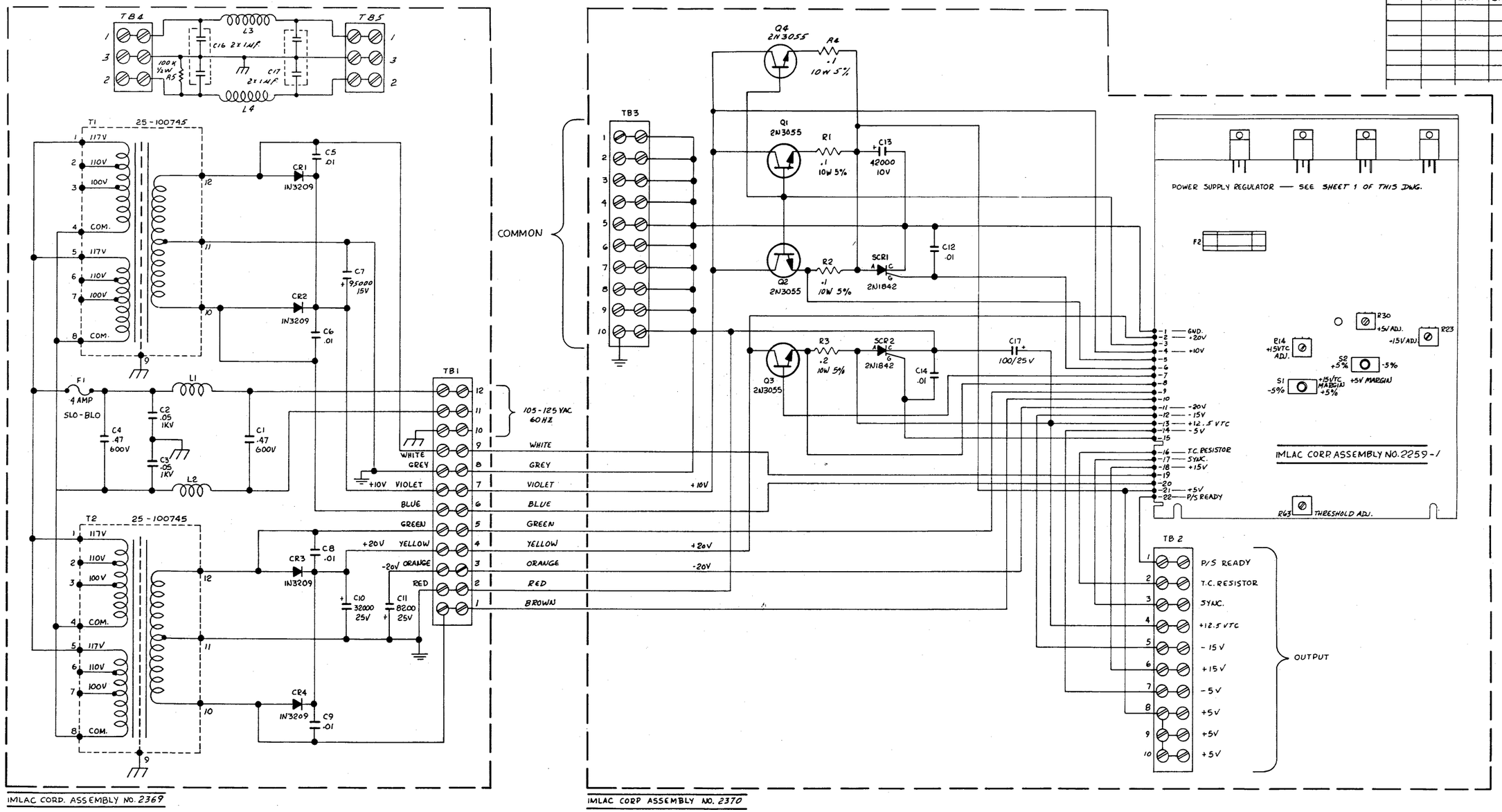

RESISTANCE IN OHMS
CAPACITANCE IN MFDS

SYMBOLS USED

F1 - F1	TB1 - TB5	CR1 - CR4
T1 - T2	Q1 - Q4	C1 - C14, C17
L1 - L4	SCR1 - SCR2	R1 - R5

© by IMLAC CORP. 1970, 1971, 1972

THIS DWG. WAS MADE FROM DWG. #871. - APR. 28-72. J.V.

	BY	DATE
LAYOUT	NJF	23SEP71
DRAWN	NJF	23SEP71
CHECKED		
APPROVED		
ISSUE		
COPIED		

IMLAC CORPORATION
WALTHAM MASSACHUSETTS

TITLE: POWER SUPPLY - 18A LOGIC

PREFIX	SIZE	DRAWING NUMBER	REV
L	D	1-030	

MATERIAL | PROJECT | Scale | Sheet 2 of 2

REV.	ECN.	DATE	DFTMN	APP'D.

FROM Q3-B (7) FROM Q3-E (8) +12.5 VTC (13) FROM SCR2-G (15)

+20 V IN (2)

R4 2K · C26 .01 · R5 1K · TIP30 Q4 · R10 1K · R11 1K · R12 15K

R6 12K · R8 1K 1% · R7 6.8K · R9 562 1% · C15 5 25V · +5% · +15VTC MARGIN -5% · S1

IC 1 723 C

CR5 16V 2% · R13 1K 1% · R16 51 · R14 2K 20% · +15VTC ADJ. · CW · C16 .01 · R15 11K 1%

GROUND (1)

R18 1K · TIP32 Q5 · C27 .01 · R17 3.3K · R19 .91 2W · R20 1K · R21 15K · R22 3.32K 1% · R23 2K · +15V ADJ. · CW · C18 .01

IC 2 723 C

CR6 6V 2% · SCR 3 MCR407-1 · C19 .01 · R25 51 · C20 5 25V

(18) +15V

(16) T.C. RESISTOR

R24 3.01K 1%

FROM Q1 & Q2-B (3)

+10V IN (4)

R45 680 · R46 680 · CR7 40-100259-1 · R51 2K · Q10 2N3646 · CR8 40-100259-1 · R52 2 2W

Q14 TIP30 · CR9 6.2V 2% · R53 1K · R54 30 3W · R55 1K · Q13 TIP32 · Q12 2N3638 · CR10 16V 2% · R56 390 · C24 .001 · R57 3 5W · F2 1 AMP FAST BLOW

(14) -5V

(12) -15V

(22) P/S READY

R50 1K · R49 1K · Q11 2N3055

R26 1K · TIP32 Q6 · R23 1K · R34 330

R27 12K · R29 1K 1% · R28 30K · R30 2K · CW · +5V ADJ. · R31 4.75K 1% · C21 5 25V · +5% + 5V MARGIN -5% · S2

IC 3 723 C

Q7 MPSA10 · R40 10K · R39 15K · R38 4.7K · Q8 2N3646 · R44 33K · R42 330 · R43 15 · Q9 MPSA10 · R47 10K · R48 15K · R41 4.7K · C28 1 15V · C23 100 25V

R36 680 · R37 10K · R32 51 · CR11 6.2V 2% · C22 .01 · R35 1K

FROM SCR1-G (6) · +5V (21) · FROM Q8-E (5)

IC4 7400 · IC7 7400 · IC8 7400 · IC9 7400 · IC5 7400 · IC6 7400

Q18 2N3646

CR17 1N4002 · CR18 1N4002 · R67 2K

CR12 · CR13 · CR14 · CR15 40-100259-1

FROM TB2 TERM.9 (19) · FROM TB2 TERM.6 (20) · SYNC. (17)

R65 1K

CR16 6.2V 2% · R58 6.2K · R59 4.7K · C25 5 25V

Q15 2N4248 · Q16 2N4248 · R63 2K 20% · THRESH. ADJ. · R62 510 · R64 6.2K · Q17 MPSA10

R60 3.3K · R61 510 · R66 6.2K · R68 10K

-20V (11) · FROM TB1 TERM. 1 (10) · FROM TB1 TERM 5 (9)

UNLESS OTHERWISE SPECIFIED:
RESISTANCE IN OHMS
CAPACITANCE IN MFDS.
RESISTORS 1/2W ±5%

SYMBOLS USED

IC1 - IC6	SCR3 - SCR3
Q4 - Q18	CR5 - CR18
S1 - S2	C15 - C29
F2 - F2	R4 - R68

SYMBOLS NOT USED
C17, C29

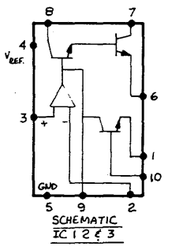

SCHEMATIC IC 1 & 3

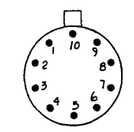

IC 1,2 & 3 TOP VIEW

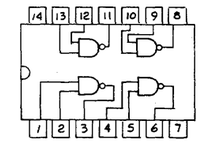

IC 4,5 & 6 TOP VIEW

© by IMLAC CORP. 1970, 1971, 1972

THIS DWG. WAS MADE FROM DWG. 871.- APR. 28-72 J.V.

	BY	DATE
LAYOUT	NJF	22SEP71
DRAWN	NJF	22SEP71
CHECKED		
APPROVED		
ISSUE		
COPIED		

MATERIAL

IMLAC CORPORATION
206 NEWTON STREET
WALTHAM MASSACHUSETTS 02154

PROJECT

TITLE
POWER SUPPLY - 18A
LOGIC

PREFIX	SIZE	DRAWING NUMBER	REV.
L	D	1-030	

Scale · Sheet 1 of 2

REV.	ECN	DATE	DFTM	APP'D.
A	---	12-15-70	J.V.	
B	—	7 JAN 71	J.V.	
C	---	2-9-71	J.V.	
E	390	4-2-71	J.V.	
F	408	4-27-71	J.V.	
G	423	18 MAY 71	C.B.A.	

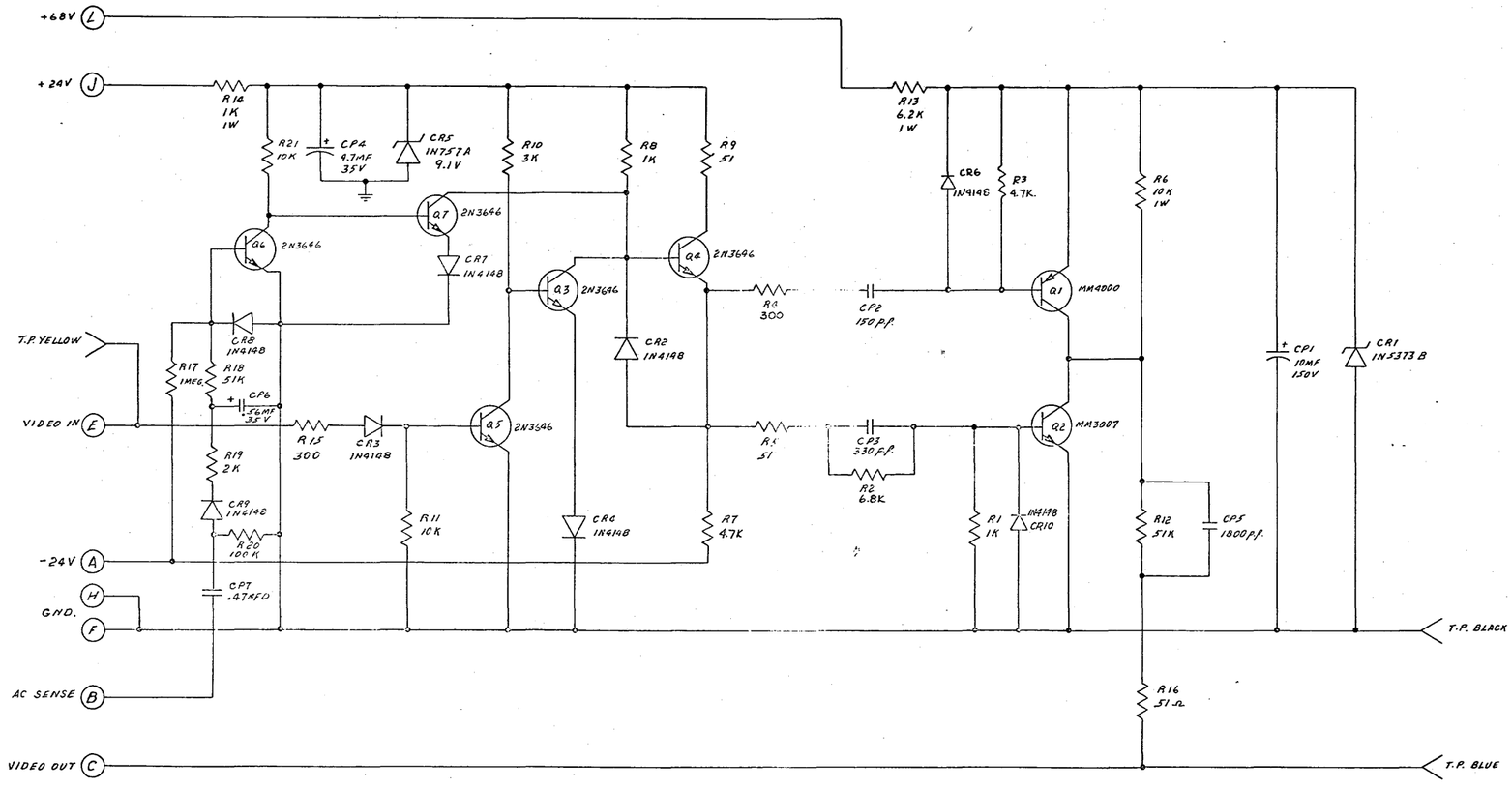

NOTES: 1.- UNLESS OTHERWISE SPECIFIED, ALL RESISTORS ARE ½ W, AND RESISTANCE VALUES ARE IN OHMS ±5%.

© by IMLAC CORP. 1970, 1971, 1972

	BY	DATE
LAYOUT	J.V.	10-26-70
DRAWN	J.V.	10-27-70
CHECKED		
APPROVED		
ISSUE		
COPIED		
MATERIAL		

IMLAC CORPORATION
296 NEWTON STREET
WALTHAM, MASSACHUSETTS 02154

PROJECT 1646

TITLE: VIDEO AMPLIFIER

PREFIX	SIZE	DRAWING NUMBER	REV
S	D	2256	G

Scale | Sheet 1 OF 2

REV.	ECN	DATE	DFTMN	APPVD
A	—	[illegible]		
B	-	[illegible]	NJF	
D	477	[illegible]	[illegible]	

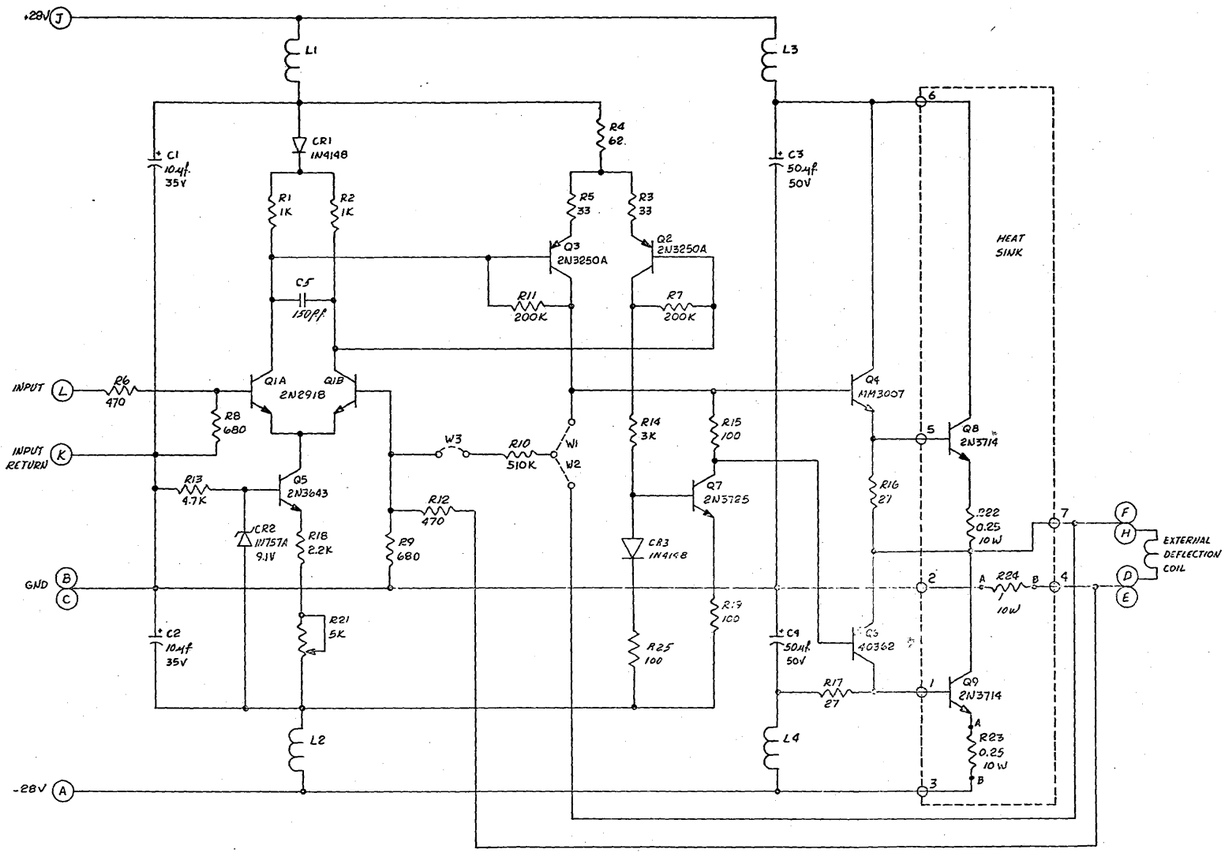

NOTE 1. ALL RESISTORS 1/2 W, 5%, OHMS UNLESS OTHERWISE NOTED

© by IMLAC CORP. 1970, 1971, 1972

	BY	DATE
LAYOUT	NJF	18 DEC 70
DRAWN	NJF	18 DEC 70
CHECKED		
APPROVED	[illegible]	[illegible]
ISSUE		
COPIED		
MATERIAL		

IMLAC CORPORATION
286 NEWTON STREET
WALTHAM, MASSACHUSETTS 02154

PROJECT

TITLE
DEFLECTION AMPLIFIER

PREFIX	SIZE	DRAWING NUMBER	REV.
S	D	2273	D

Scale

Sheet 1 of 2

REV.	ECN.	DATE	DFTMN	APPVD.
A	–	23AUG71	NJF	

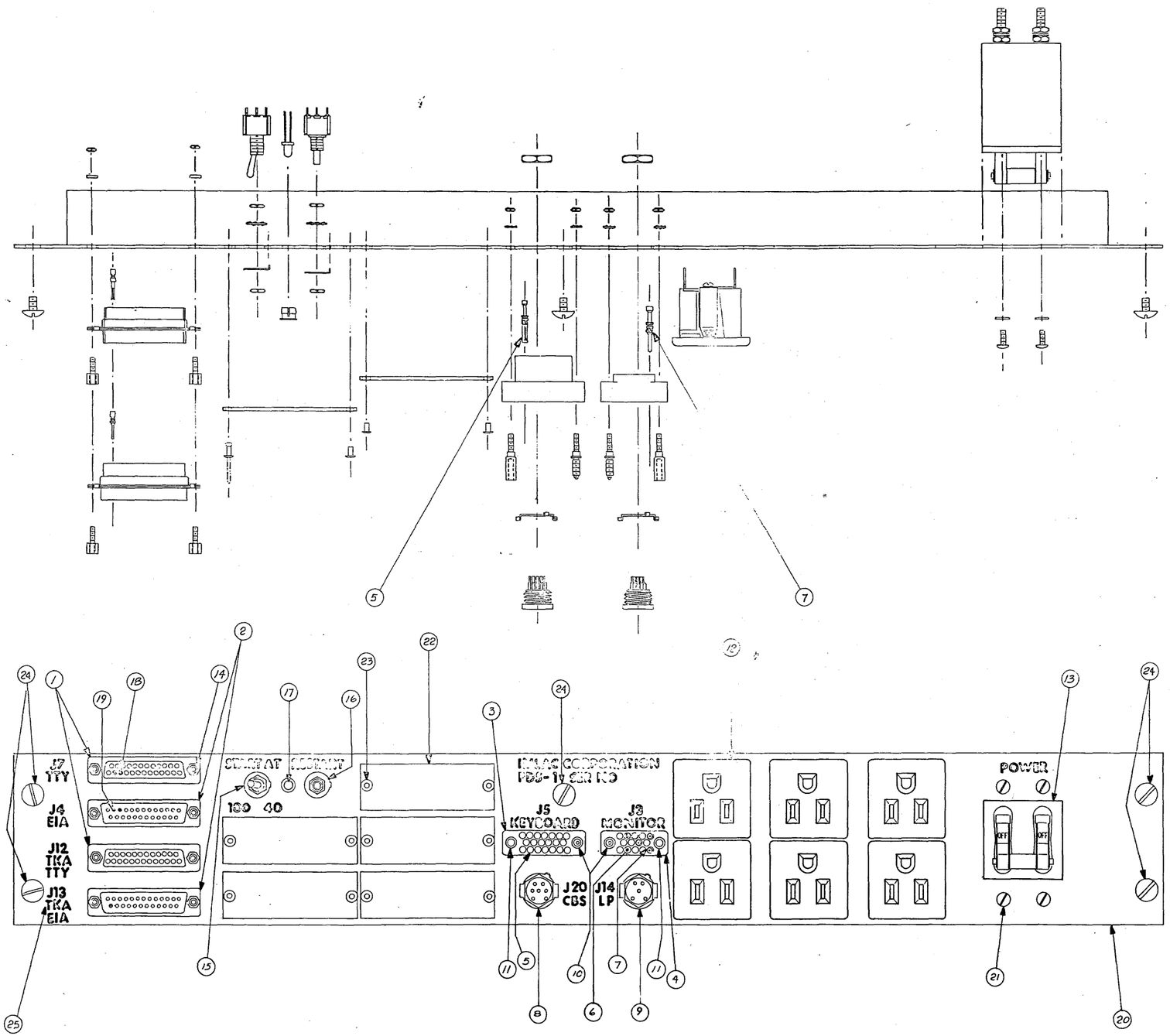

© by IMLAC CORP. 1970, 1971, 1972

	BY	DATE
LAYOUT	NJF	23AUG71
DRAWN	NJF	23AUG71
CHECKED		
APPROVED		
ISSUE		
COPIED		
MATERIAL		

IMLAC CORPORATION
PROJECT

TITLE: I/O PANEL ASSY.

PREFIX	SIZE	DRAWING NUMBER	R
A	D	2323	F

Scale | Sheet 1/2

REV.	ECN	DATE	DFTMN	APPV'D

POWER SUPPLY, INPUT SECTION

12A - 2258
18A - 2369

	100				200				300			
32	X DRIVER, SECTION A	10-12 56-58	(2246) OR (2380)	(12001) (12396)	(902-A) (983)	MISC. CONTROL	18-20 56-58	(2317)	(12263)	(812)				
31	Y DRIVER, SECTION A	10-12 56-58	(2246) OR (2380)	(12001) (12396)	(903-A) (984)	RUN CONTROL	10-12 66-68	(2263-01)	(12075)	(868)				
30	INHIBIT DRIVER, SECTION A	10-12 56-58	(2247)	(12002)	(904-A)	I&K MEMORY CONTROL △	20-22 66-68	(2337)	(12297)	(901-16K)				
29											MOS-2, INTERRUPTS	22-24 54-56	(2356-04)	(12338) (928)
28	STACK, SECTION A	12-14 62-64		(12-12134)	(904-A)	STACK, SECTION A	12-14 62-64		(12-12134)	(902-A) (903-A)	ASYNC SEND	18-20 58-60	(2318)	(12284) (869)
27	SENSE AMP. SECTION A	10-12 58-60	(2254)	(12009)	(908-A)	MEMORY CONTROL	16-18 54-56	(2307)	(12219)	(849-A)	ASYNC REC	18-20 60-62	(2319)	(12245) (870)
26	SENSE AMP. SECTION B	10-12 58-60	(2254)	(12009)	(907-A)	INST. REG. & DECODER	16-18 66-68	(2310)	(12224)	(856-A)	ASYNC I/O BAUD-8/11	20-22 70-72	(2342)	(12303)
25														
24	STACK, SECTION B	12-14 62-64		(12-12134)	(907-A)	STACK, SECTION B	12-14 62-64		(12-12134)	(905-A) (906-A)				
23	INHIBIT DRIVER, SECTION B	10-12 56-58	(2247)	(12002)	(907-A)	ACC CONTROL	20-22 60-62	(2303-01)	(12203)	(840)				
22	Y DRIVER, SECTION B	10-12 56-58	(2246) OR (2380)	(12001) (12396)	(906-A) (985)	ACC & ACI 12-15	14-16 54-56	(2287)	(12145)	(826)				
21	X DRIVER, SECTION B	10-12 56-58	(2246) OR (2380)	(12001) (12396)	(905-A) (986)	ACC & ACI 8-11	14-16 54-56	(2287)	(12145)	(823)				
20	X DRIVER, SECTION C △	10-12 56-58	(2246) OR (2380)	(12001) (12396)	(908-16K) (987)	ACC & ACI 4-7	14-16 54-56	(2287)	(12145)	(822)	CABLE, CONSOLE SWITCHES & MISC. LAMP DRIVE	16-18 60-66		(855-A)
19	Y DRIVER, SECTION C △	10-12 56-58	(2246) OR (2380)	(12001) (12396)	(909-16K) (988)	ACC & ACI 0-3	14-16 54-56	(2287)	(12145)	(821-A)				
18	INHIBIT DRIVER, SECTION C △	10-12 56-58	(2247)	(12002)	(910-16K)	SKIP & LINK	14-16 72-74	(2305)	(12217)	(845)	IOT CARD	12-14 58-60	(2272)	(12100) (847-A)
17														
16	STACK, SECTION C △	12-14 62-64		(12-12134)	(910-16K)	STACK, SECTION C △	12-14 62-64		(12-12134)	(908-16K) (909-16K)				
15	SENSE AMP. SECTION C △	10-12 58-60	(2254)	(12009)	(910-16K)	TPG & CLOCK	10-12 72-74	(2265-01)	(12089)	(820-A)				
14	MEMORY OUTPUT BUFFER	16-16 64-66	(2295)	(12168)	(843-A)	CYCLE CONTROL	12-14 66-68	(2278)	(12127)	(772)				
13	READ ONLY MEMORY	30-32 ---	(2306)	(12218)	(846-A)	MB 8-15	12-14 70-72	(2283)	(12138)	(819-A)				
12	SENSE AMP. SECTION D △	10-12 58-60	(2254)	(12009)	(913-16K)	MB 0-7	12-14 70-72	(2283)	(12138)	818-A)				
11														
10	STACK, SECTION D △	12-14 62-64		(12-12134)	(913-16K)	STACK, SECTION D △	12-14 62-64		(12-12134)	(911-16K) (912-16K)				
9	INHIBIT DRIVER, SECTION D △	10-12 56-58	(2247)	(12002)	(913-16K)	MA 8-15	12-14 70-72	(2283)	(12138)	(817-A)				
8	Y DRIVER, SECTION D △	10-12 56-58	(2246) OR (2380)	(12001) (12396)	(912-16K) (989)	MA 1-7	12-14 70-72	(2283)	(12138)	(816-A)	CABLE, LAMP DRIVE	16-18 64-66		(12302) (855-A)
7	X DRIVER, SECTION D △	10-12 56-56	(2246) OR (2380)	(12001) (12396)	(911-16K) (990)	B, MB, MA, PC CONTROL MA AUTO INDEX DET	14-16 68-70	(2302-01)	(12202)	(842)				
6						PC 8-15	12-14 70-72	(2283)	(12138)	(815)	VIC-1	22-24 58-60	(2373-01)	(12369) (940)
5	Y D/A	14-16 60-62	(2293)	(12159)	(852)	PC 1-7	12-14 70-72	(2283)	(12138)	(814-A)				
4	Y DISPLAY ACC.	16-18 58-60	(2309)	(12221)	(851)	DPC 8-15	12-14 70-72	(2283)	(12138)	(813)	8 LEVEL DT	12-14 68-70	(2279)	(12130) (858-A)
3	DMB/SIC REG/40 ~ SYNC.	12-14 64-66	(2275-01)	(12125)	(997)	DPC 1-7	12-14 70-72	(2283)	(12138)	(812-A)				
2	X DISPLAY ACC.	16-18 58-60	(2309)	(12221)	(850)	DMC & DIR	12-14 72-74	(2286-02)	(12140)	(798-A)				
1	X D/A	14-16 60-62	(2293)	(12159)	(844)	DISPLAY CONTROL	14-16 62-64	(2292)	(12161)	(838)				
0														

POWER SUPPLY, REGULATOR SECTION

12 AMP 2257 CHASSIS, 2259 OR 2259-1 REGULATOR CARD.
18 AMP 2370 CHASSIS, 2259-1 REGULATOR CARD

NOTES:
1.- THE SET OF NUMBERS BEFORE THE PARENTHESIS ARE THE KEYING SLOTS FOR THE CARD.
2.- THE FIRST NUMBER IN PARENTHESIS IS THE ASSEMBLY DRAWING NUMBER OF THE CARD.
3.- THE SECOND NUMBER IS THE ARTWORK DRAWING NUMBER AND APPEARS ON THE PRINTED CIRCUIT CARD.
4.- THE THIRD NUMBER IS THE NUMBER OF THE LOGIC DRAWING, AND SHOWS THE SCHEMATIC OF THE CARD AND THE BACKPLANE WIRING.
5.- △: USED ONLY ON 12K OR 16K CONFIGURATION.

VIEW FROM WIRING SIDE

© by IMLAC CORP. 1970, 1971, 1972

	BY	DATE
LAYOUT	JV	3-16-72
DRAWN	JV	3-16-72
CHECKED		
APPROVED		
ISSUE		
COPIED		
MATERIAL		

IMLAC CORPORATION
296 N WTON STREET
WALTHAM MASSACHUSETTS 0215.

PROJECT

TITLE: STANDARD FUNCTION LOCATION

PREFIX	SIZE	DRAWING NUMBER	REV.
A	D	2605-	

Scale | Sheet

REV	ECN	DATE	DFTMN	APR'V

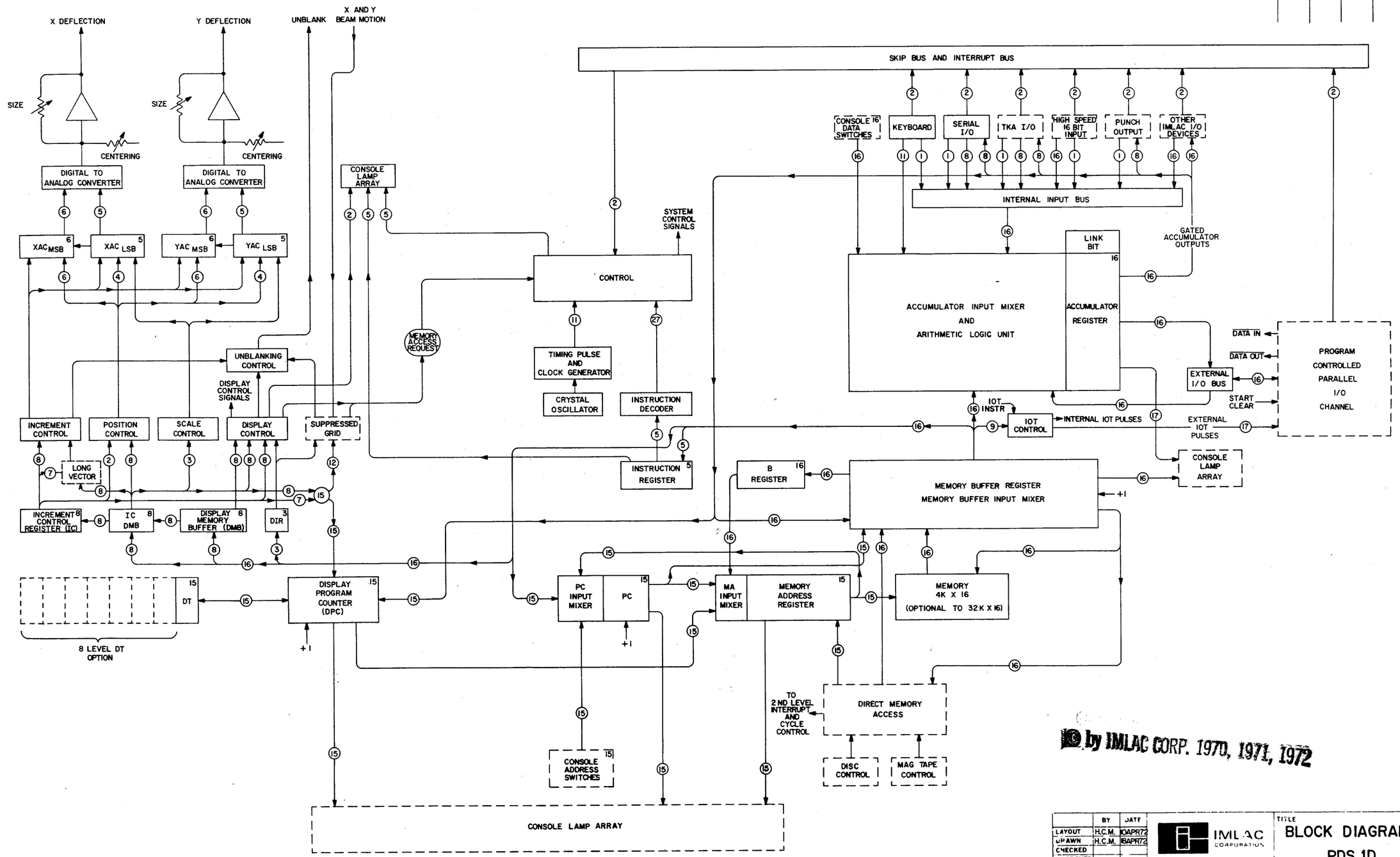

© by IMLAC CORP. 1970, 1971, 1972

	BY	DATE
LAYOUT	H.C.M.	10APR72
DRAWN	H.C.M.	18APR72
CHECKED		
APPROVED		
ISSUE		
COPIED		

IMLAC CORPORATION

TITLE: BLOCK DIAGRAM PDS 1D

PP	SIZE	DRAWING NUMBER	REV.
	A D	5100	

MATERIAL | PROJECT | Scale | Sheet

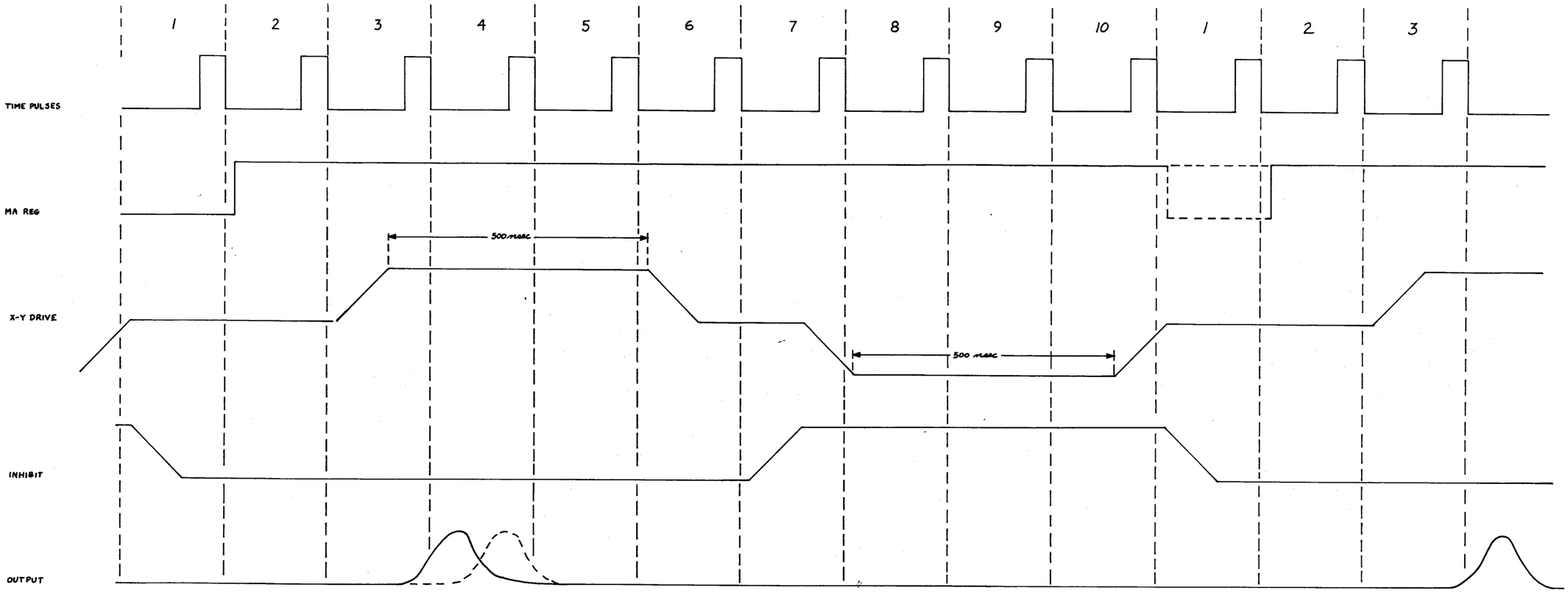

© by IMLAC CORP. 1970, 1971, 1972

©1971

	BY	DATE
LAYOUT	NJF	11-28-69
DRAWN	NJF	12-28-69
CHECKED		
APPROVED		
ISSUE		
COPIED		

MATERIAL

PROJECT

IMLAC

MEMORY TIMING

PREFIX	SIZE	DRAWING NUMBER	REV.
L		652	

Scale

Sheet

REV D 10-7-71 R.T.M.

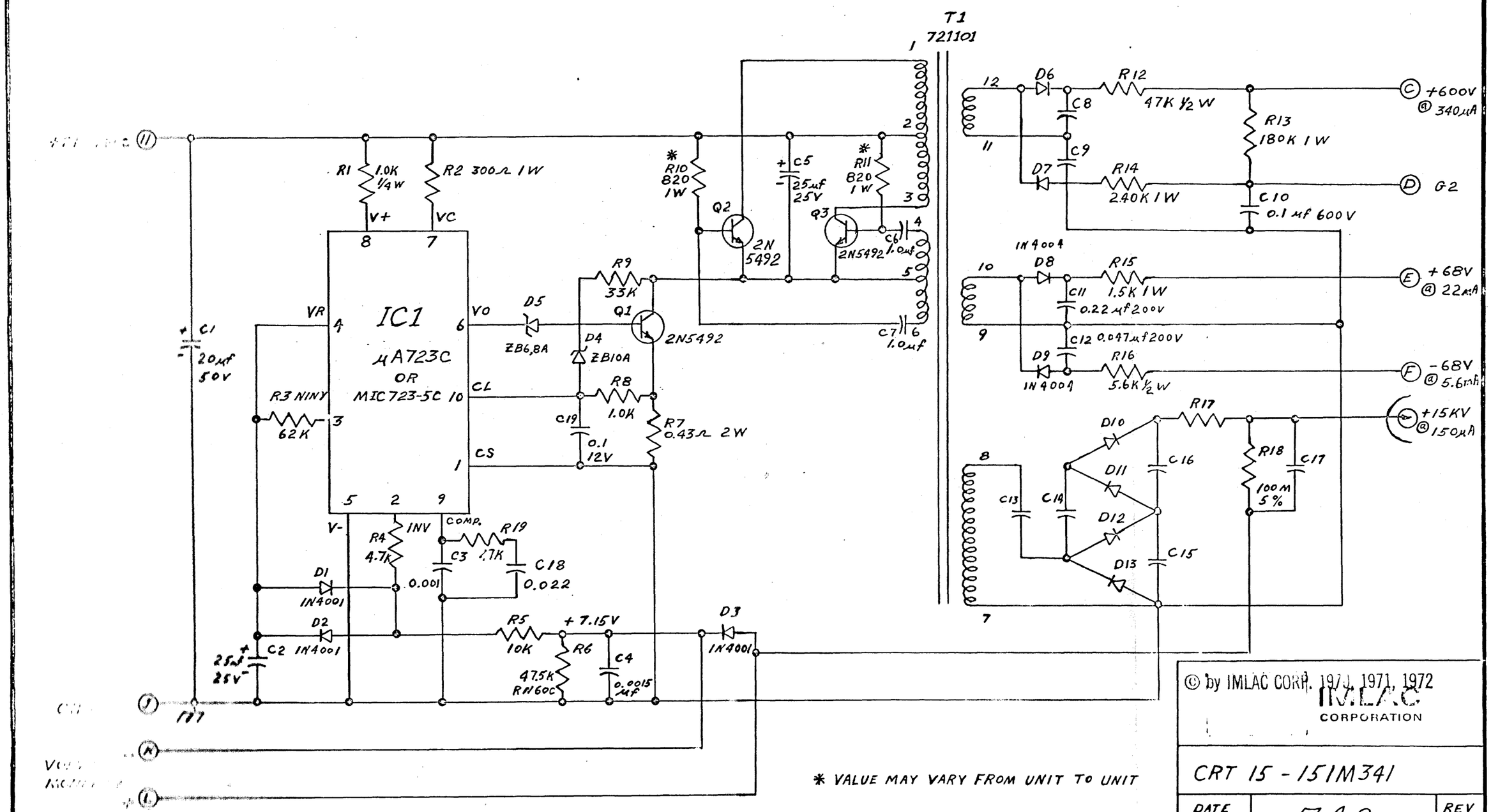

* VALUE MAY VARY FROM UNIT TO UNIT

NOTE: DWG WAS WALDEN B1119

© by IMLAC CORP. 1970, 1971, 1972

IMLAC CORPORATION

CRT 15 - 151M341

DATE		REV
21OCT70	749	D

REV.	ECN	DATE	DFTM	APP'D.
D	---	1 OCT 71	GB	RBB
E	-	23 Mar 72	H.C.M.	

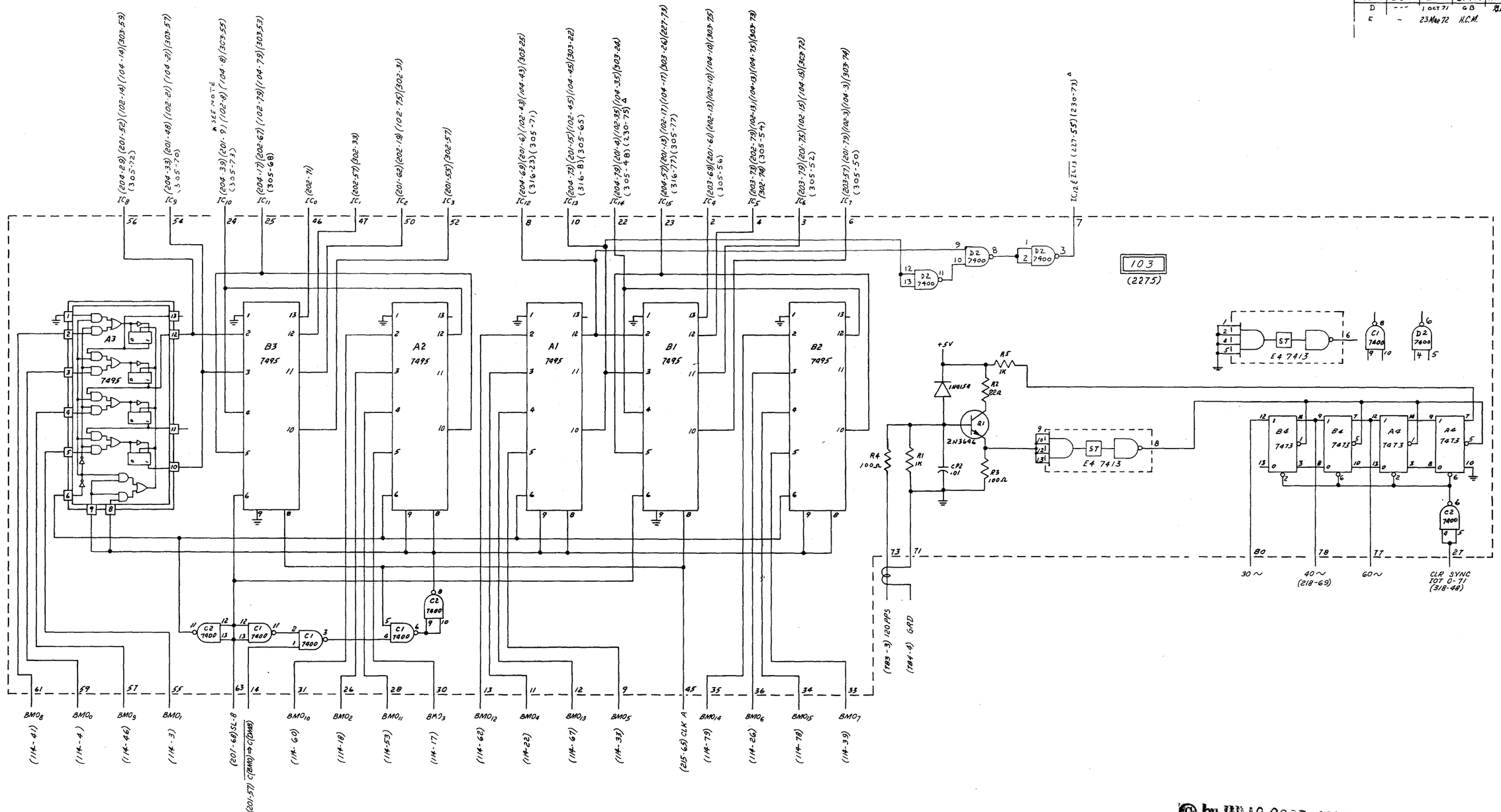

* NOTE:
Δ USED ON 16K ONLY

© by IMLAC CORP 1970, 1971, 1972

© 1971

	BY	DATE
LAYOUT	J.V.	1-13-71
DRAWN	J.V.	1-13-71
CHECKED	CBA	3-19-71
APPROVED		
ISSUE		
COPIED		
MATERIAL		

IMLAC CORPORATION

PROJECT PROD

TITLE
DISPLAY MEMORY BUFFER & INCREMENT CONTROL REGISTERS & 40 CYCLES SYNC.

PREFIX	SIZE	DRAWING NUMBER	REV.
L	D	771-A	E

Scale Sheet

REV.	ECH.	DATE	DSTM	APP'D
E	---	1 OCT 71	C.B	
			A. M.	
H	---	3-1-72	J.V.	

202 (2286)

A1-4 CONNECTS TO D3-6 ON -00,-01 BDS. (DOTTED LINE) A1-4 OUT TO PIN# 28, D3-6 OUT TO PIN# 64 ON -02 BDS. ONLY (SOLID LINES).

NOTES:
1. Δ USED ON 16K ONLY

© 1971
© by IMLAC CORP. 1971, 1972

	BY	DATE
LAYOUT	J.V.	2-9-71
DRAWN	J.V	2-4-71
CHECKED		
APPROVED		
ISSUE		
COPIED		
MATERIAL		

IMLAC CORPORATION
PROJECT PROD

TITLE
DISPLAY MODE CONTROL & DISPLAY INSTRUCTION REG.

PREFIX	SIZE	DRAWING NUMBER	REV.
L	D	798-A	H

Scale
Sheet

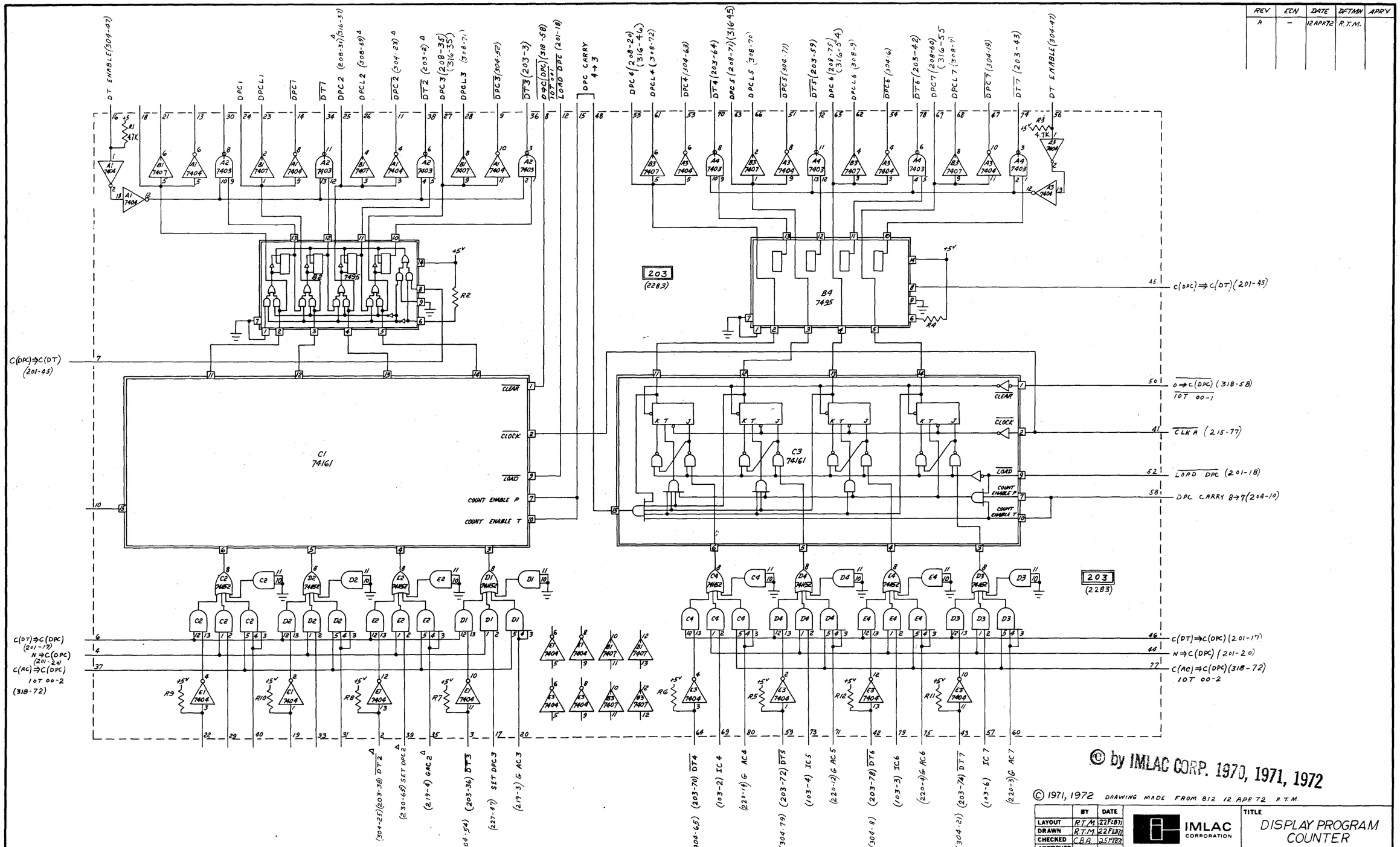

REV	ECN	DATE	DFTMN	APRV
A	–	12APR72	R.T.M.	

© by IMLAC CORP. 1970, 1971, 1972

© 1971, 1972 DRAWING MADE FROM 812 12 APR 72 R.T.M.

	BY	DATE
LAYOUT	R.T.M.	22FEB71
DRAWN	R.T.M.	22FEB71
CHECKED	C.B.A.	25FEB71
APPROVED		
ISSUE		
COPIED		
MATERIAL		

IMLAC CORPORATION
298 NEWTON STREET
WALTHAM MASSACHUSETTS 02154

PROJECT PROD.

TITLE DISPLAY PROGRAM COUNTER BITS 1-7

PREFIX	SIZE	DRAWING NUMBER	REV.
L	D	812-A	A

Scale Sheet

2. Δ USED ON 16K ONLY
1. ALL RESISTORS, UNLESS OTHERWISE SPECIFIED, ARE 1/8 WATT, 330 Ω.

NOTES:

REV	ECN	DATE	DFTMN	APP'V
A	-	3-18-71	R.T.M.	C.B.A.
B	-	3-19-71	R.T.M.	C.B.A.
C	-	22 Mar 71	H.C.M.	C.B.A.
D	-	22 Mar 71	H.C.M.	C.B.A.
E	-	23 Mar 71	H.C.M.	C.B.A.
F	-	26 MAR 71	W.J.F	C.B.A.
G	-	3 JUN 71	C.B.	6-3-71
H	-	7 Jun 71	H.C.M.	
J	-	27 DEC 71	R.T.M.	

DT ENABLE (304-47)
DPC 8 (209-40) (316-57)
DPC L 8 (308-47)
DPC 8 (304-46)
DT 8 (204-22)
DPC 9 (209-31) (316-60)
DPC L 9 (308-21)
DPC 9 (304-39)
DT 9 (204-19)
DPC 10 (209-35) (316-59)
DPC L 10 (308-45)
DPC 10 (304-71)
DT 10 (204-2)
DPC 11 (209-20) (316-64)
DPC L 11 (308-43)
DPC 11 (304-2)
DT 11 (204-3)
0 ⇒ C(DPC) / IOT 00-1
LOAD DPC (201-18)
DPC CARRY 12 → 11
DPC 12 (209-80) (316-65)
DPC L 12 (308-21)
DPC 12 (304-25)
DT 12 (204-64)
DPC 13 (209-71) (316-68)
DPC L 13 (308-25)
DPC 13 (304-34)
DT 13 (204-59)
DPC 14 (209-75) (316-72)
DPC L 14 (308-35)
DPC 14 (304-55)
DT 14 (204-42)
DPC 15 (209-60) (316-70)
DPC L 15 (308-31)
DPC 15 (304-67)
DT 15 (204-43)
DT ENABLE (304-47)

R1 4.7K
R2
R3 4.7K
R4
R5
R6
R7
R8
R9
R10
R11
R12

A1 7404 · B1 7407 · A2 7403 · A3 7404 · B3 7407 · A4 7403 · B4 7495 · C1 74161 · C3 74161 · C2 74152 · D2 74152 · E2 74152 · D1 74152 · C4 74152 · D4 74152 · E4 74152 · D3 74152 · E1 7404 · E3 7404

204 (2283)

C(DPC) ⇒ C(DT) (201-45)
C(DPC) ⇒ C(DT) (201-45)
DPC CARRY 8 → 7 (203-58)
C(DT) ⇒ C(DPC) (201-17)
N ⇒ C(DPC) (201-20)
(318-72) C(AC) ⇒ C(DPC)
IOT 00-2

0 ⇒ C(DPC) (318-58) / IOT 00-1
CLKA (215-77)
LOAD DPC (201-18)
C(DPC) + 1 ⇒ C(DPC) (201-22)
C(DT) ⇒ C(DPC) (201-17)
N ⇒ C(DPC) (201-20)
C(AC) ⇒ C(DPC) (318-72)
IOT 00-2

(304-48) (204-39) DT 8
(103-54) IC 8
(221-14) & AC 8
(304-61) (204-38) DT 9
(103-54) IC 9
(221-12) & AC 9
(304-73) (204-38) DT 10
(103-24) IC 10
(221-9) & AC 10
(304-3) (204-36) DT 11
(103-25) IC 11
(221-3) & AC 11
(304-17) (204-79) DT 12
(103-8) IC 12
(222-19) & AC 12
(304-36) (204-72) DT 13
(103-10) IC 13
(222-12) & AC 13
(304-57) (204-78) DT 14
(103-22) IC 14
(222-9) & AC 14
(304-69) (204-74) DT 15
(103-23) IC 15
(222-3) & AC 15

NOTES:
1. ALL RESISTORS, UNLESS OTHERWISE SPECIFIED, ARE 1/8 WATT, 330 Ω.

© by IMLAC CORP. 1970, 1971, 1972
© 1971

	BY	DATE
LAYOUT	R.T.M.	24 FEB 71
DRAWN	R.T.M.	24 FEB 71
CHECKED	C.B.A.	25 FEB 71
APPROVED		
ISSUE		
COPIED		
MATERIAL		

IMLAC CORPORATION
296 NEWTON STREET
WALTHAM MASSACHUSETTS 02154

PROJECT: PROD

TITLE: DISPLAY PROGRAM COUNTER
BITS 8-15

PREFIX	SIZE	DRAWING NUMBER	REV.
L	D	813	J

Scale · Sheet

REV	ECN	DATE	DFTMN	APR'V
A	-	10SEP71	H.L.M	
B	-	1OCT71	GB	[illegible]
C	-	27DEC71	R.T.M.	

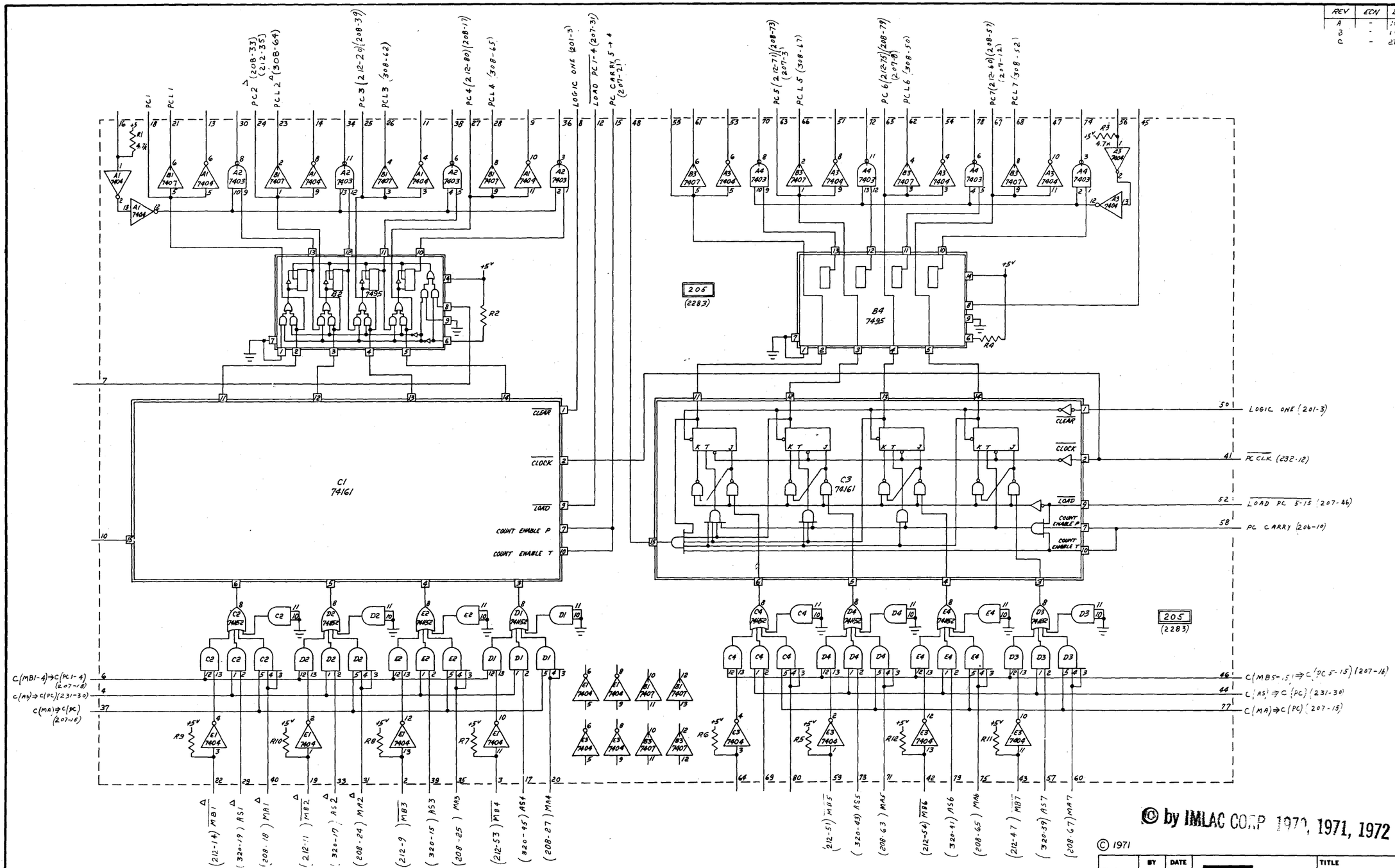

© by IMLAC CORP 1970, 1971, 1972

© 1971

3. Δ FOR 16K ONLY
2. * FOR 8K ONLY
1. ALL RESISTORS, UNLESS OTHERWISE SPECIFIED, ARE 1/8 WATT, 330Ω.

NOTES:

	BY	DATE
LAYOUT	R.T.M.	26FEB71
DRAWN	R.T.M.	26FEB71
CHECKED	C.B.A.	26FEB71
APPROVED		
ISSUE		
COPIED		
MATERIAL		

IMLAC CORPORATION
286 NEWTON STREET
WALTHAM MASSACHUSETTS 02154

PROJECT PROD

TITLE
PROGRAM COUNTER
BITS 1-7

PREFIX	SIZE	DRAWING NUMBER	REV.
L	D	814-A	C

Scale | Sheet

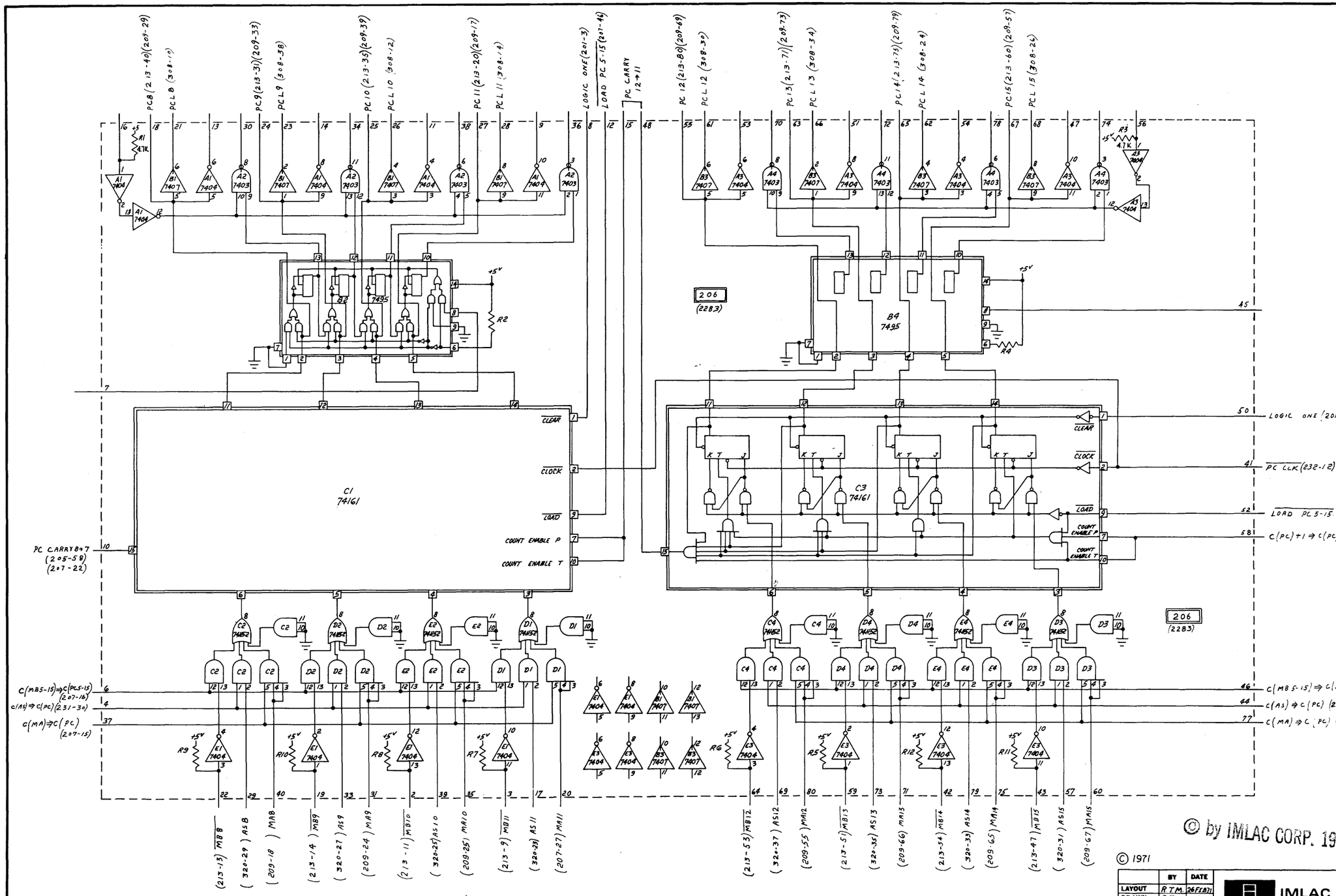

REV	ECN	DATE	DFTMN	APR'V
A	-	3-18-71	R.T.M.	C.B.A.
B	-	3-19-71	R.T.M.	C.B.A.
C	-	22 Mar 71	H.C.M.	C.B.A.
D	-	26 Mar 71	H.C.M.	C.B.A.
E	-	15 Apr 71	H.C.M.	C.B.A.
F	-	1 Jun 71	H.C.M.	
H	-	27 DEC 71	R.T.M.	

© by IMLAC CORP. 1970, 1971, 1972

© 1971

	BY	DATE
LAYOUT	R.T.M.	26 FEB 71
DRAWN	R.T.M.	26 FEB 71
CHECKED	C.B.A.	26 FEB 71
APPROVED		
ISSUE		
COPIED		
MATERIAL		

IMLAC CORPORATION
296 NEWTON STREET
WALTHAM, MASSACHUSETTS 02154

PROJECT PROD

TITLE
PROGRAM COUNTER
BITS 8-15

PREFIX	SIZE	DRAWING NUMBER	REV.
L	D	815	H
Scale		Sheet	

1. ALL RESISTORS, UNLESS OTHERWISE SPECIFIED, ARE 1/8 WATT, 330 Ω.

NOTES:

REV	ECN	DATE	DFTMN	APRV
A	---	8-25-71	J.V.	R.T.M.
B	---	10 SEPT 71	H.S.M	
C	---	1 OCT 71	G.B.	J.D.B
D	-	27 DEC 71	R.T.M.	

MA1 (113-7) (227-71)
GRD (205-40) (227-60)
MAL 1 (320-60)
MA2 (113-13) (227-67)
(205-32)
MA2 (320-70)
MA3 (113-15) (227-65)
(205-35)
MA3 (320-64)
(121-15) (107-15)
MA4 (120-15) (132-15)
(113-17) (205-30)
MA4 (308-75)
LOGIC ONE (201-3)
MA CARRY 3→4
(121-22) (107-22)
MA5 (120-27) (132-27)
(113-19) (205-71)
MA5 (308-63)
(207-80)
(121-19) (107-19)
MA6 (120-29) (132-19)
(113-25) (205-72)
MA6 (308-73)
(207-78)
(121-13) (107-13)
MA7 (120-31) (132-13)
(113-27) (205-60)
MA7 (308-98)
(207-74)
R1 4.7K
R3 4.7K
A1 7404
B1 7407
A2 7403
A3 7404
A4 7403
B3 7407
B2 7495
B4 7495
R2
R4
208 (2283)
C1 74161
C3 74161
CLEAR
CLOCK
LOAD
COUNT ENABLE P
COUNT ENABLE T
C2 74152
D2 74152
E2 74152
D1 74152
C4 74152
D4 74152
E4 74152
D3 74152
E1 7404
E3 7404
R9
R10
R8
R7
R6
R5
R12
R11
B1
(212-38) B2
(205-24) PC2
(203-25) DPC2
(212-36) B3
(205-25) PC3
(203-27) DPC3
(212-76) B4
(205-27) PC4
(203-55) DPC4
(208-76) GRD
(212-72) B5
(205-63) PC5
(203-63) DPC5
(212-78) B6
(205-65) PC6
(203-65) DPC6
(212-74) B7
(205-67) PC7
(203-67) DPC7
c(B1-4)⇒c(MA1-4)(207-26)
c(PC1-4)⇒c(MA1-4)(207-27)
c(DPC)⇒c(MA)(201-2)
45
50
41
52
58
46
44
77
LOGIC ONE (201-3)
CLKA (215-77)
t1 (215-31)
MA CARRY B→7 (209-10)
c(B5-15)⇒c(MA5-15) (207-19)
c(PC5-15)⇒c(MA5-15) (207-17)
c(DPC)⇒c(MA) (201-2)

3. Δ FOR 16K CONFIGURATION ONLY
2. * FOR 8K CONFIGURATION ONLY
1. ALL RESISTORS, UNLESS OTHERWISE SPECIFIED, ARE 1/8 WATT, 330 Ω.

NOTES:

© by IMLAC CORP. 1970, 1971, 1972

© 1971

	BY	DATE
LAYOUT	R.T.M.	1 MAR 71
DRAWN	R.T.M.	1 MAR 71
CHECKED	C.B.A.	2 MAR 71
APPROVED		
ISSUE		
COPIED		
MATERIAL		

IMLAC CORPORATION
288 NEWTON STREET
WALTHAM, MASSACHUSETTS 02154

PROJECT: PROD

TITLE: MEMORY ADDRESS REGISTER BITS 1-7

PREFIX	SIZE	DRAWING NUMBER	REV.
L	D	816-A	D

Scale: | Sheet:

REV	ECN	DATE	DFTMN	APP'V
A	-	8-25-71	J.V.	RTB
B	-	28SEP71	GB	RTB
C	-	27DEC71	R.T.M.	

2. Δ USED ON 16K ONLY
1. ALL RESISTORS, UNLESS OTHERWISE SPECIFIED, ARE 1/8 WATT, 330 Ω.

NOTES:

© 1971
© by IMLAC CORP. 1970, 1971, 1972

	BY	DATE
LAYOUT	R.T.M.	3MAR71
DRAWN	R.T.M.	3MAR71
CHECKED	C.B.A.	9MAR71
APPROVED		
ISSUE		
COPIED		
MATERIAL		

IMLAC CORPORATION
288 NEWTON STREET
WALTHAM, MASSACHUSETTS 02154

PROJECT: PROD

TITLE: MEMORY ADDRESS REGISTER BITS 8-15

PREFIX	SIZE	DRAWING NUMBER	REV.
L	D	817-A	C

Scale | Sheet

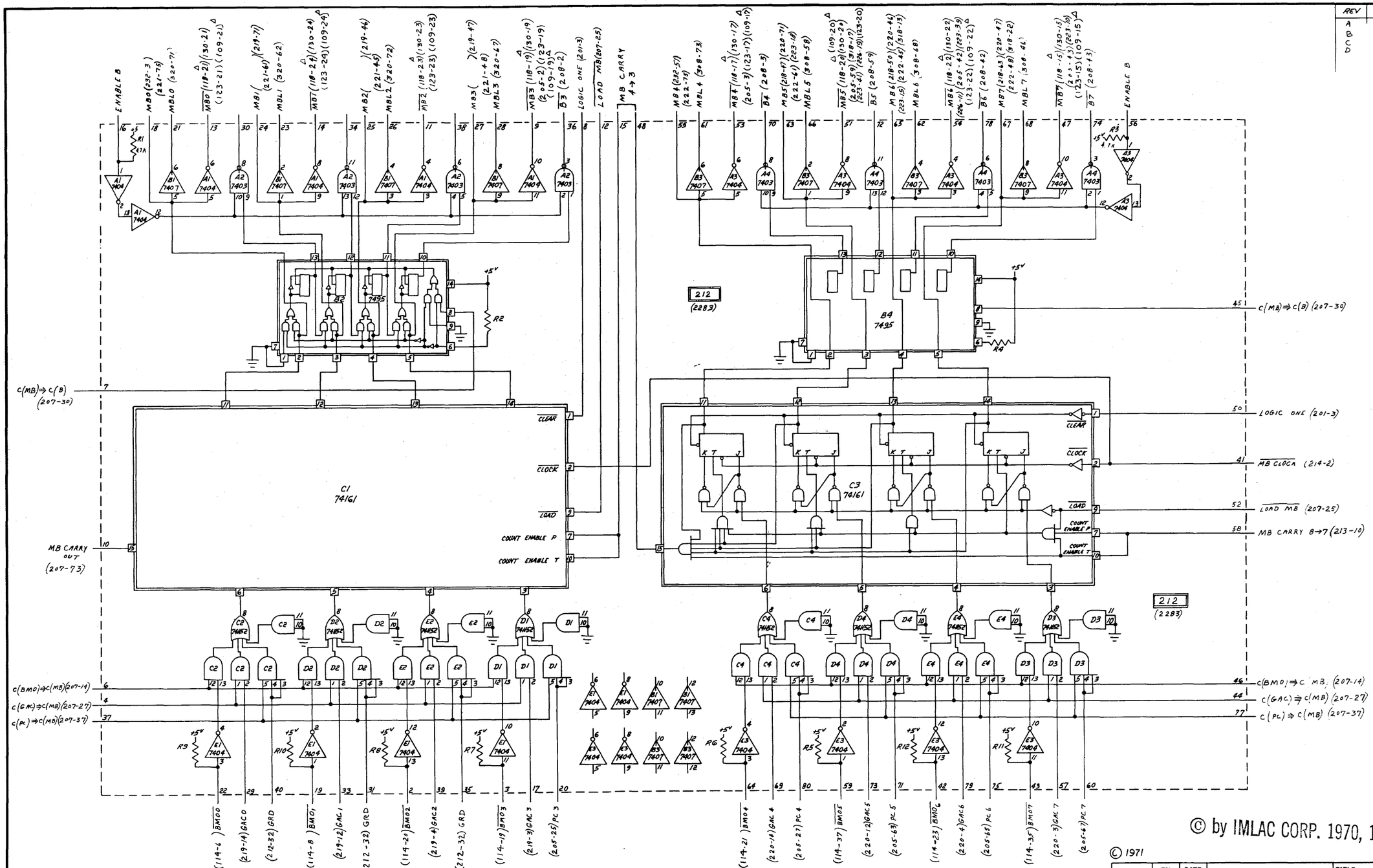

REV	ECN	DATE	DFTMN	APR'V
A	---	8-25-71	J.V.	[illegible]
B	---	13 SEP 71	HS.M	
C	---	28 SEP 71	GB	[illegible]
D	-	27 DEC 71	R.T.M.	

3. * USED ON 8K ONLY
2. Δ USED ON 16K ONLY
1. ALL RESISTORS, UNLESS OTHERWISE SPECIFIED, ARE 1/8 WATT, 330 Ω.

NOTES:

© by IMLAC CORP. 1970, 1971, 1972

© 1971

	BY	DATE
LAYOUT	R.T.M.	3 MAR 71
DRAWN	R.T.M.	3 MAR 71
CHECKED	C.B.B.	3 MAR 71
APPROVED		
ISSUE		
COPIED		
MATERIAL		

IMLAC CORPORATION
296 NEWTON STREET
WALTHAM, MASSACHUSETTS 02154

PROJECT PROD

TITLE MEMORY BUFFER BITS 0-7

PREFIX	SIZE	DRAWING NUMBER	REV.
L	D	818-A	D

Scale Sheet

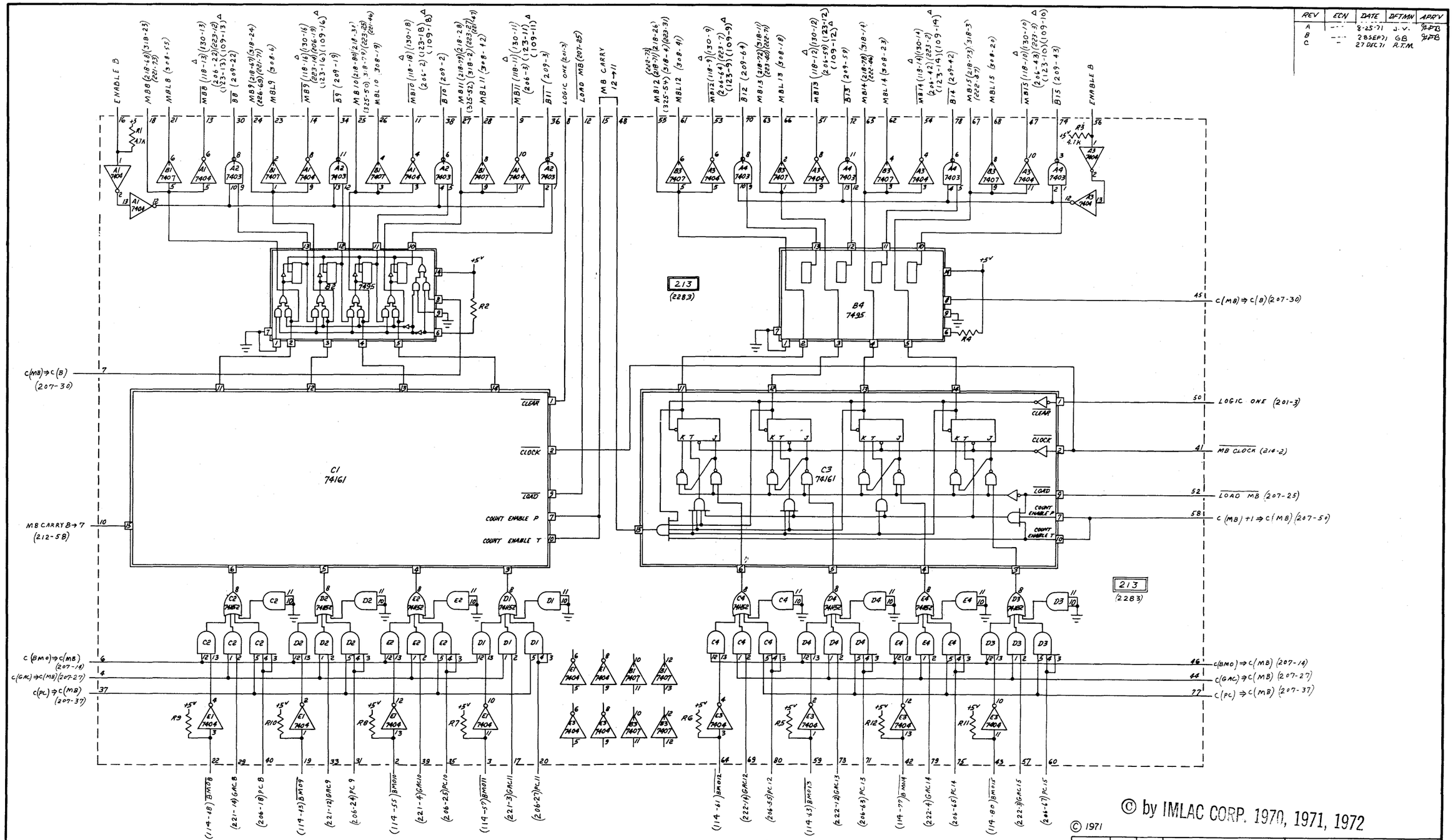

REV	ECN	DATE	DFTMN	APRV
A	---	8-25-71	J.V.	JHB
B	---	28 SEP 71	GB	JHB
C	-	27 DEC 71	R.T.M.	

© by IMLAC CORP. 1970, 1971, 1972

© 1971

	BY	DATE
LAYOUT	R.T.M.	4 MAR 71
DRAWN	R.T.M.	4 MAR 71
CHECKED	C.B.A.	4 MAR 71
APPROVED		
ISSUE		
COPIED		
MATERIAL		

IMLAC CORPORATION
285 NEWTON STREET
WALTHAM, MASSACHUSETTS 02154

PROJECT PROD

TITLE MEMORY BUFFER BITS 8-15

PREFIX	SIZE	DRAWING NUMBER	REV.
L	D	819-A	C

Scale | Sheet

2. Δ USED ON 16K ONLY
1. ALL RESISTORS, UNLESS OTHERWISE SPECIFIED, ARE 1/8 WATT, 330 Ω

NOTES:

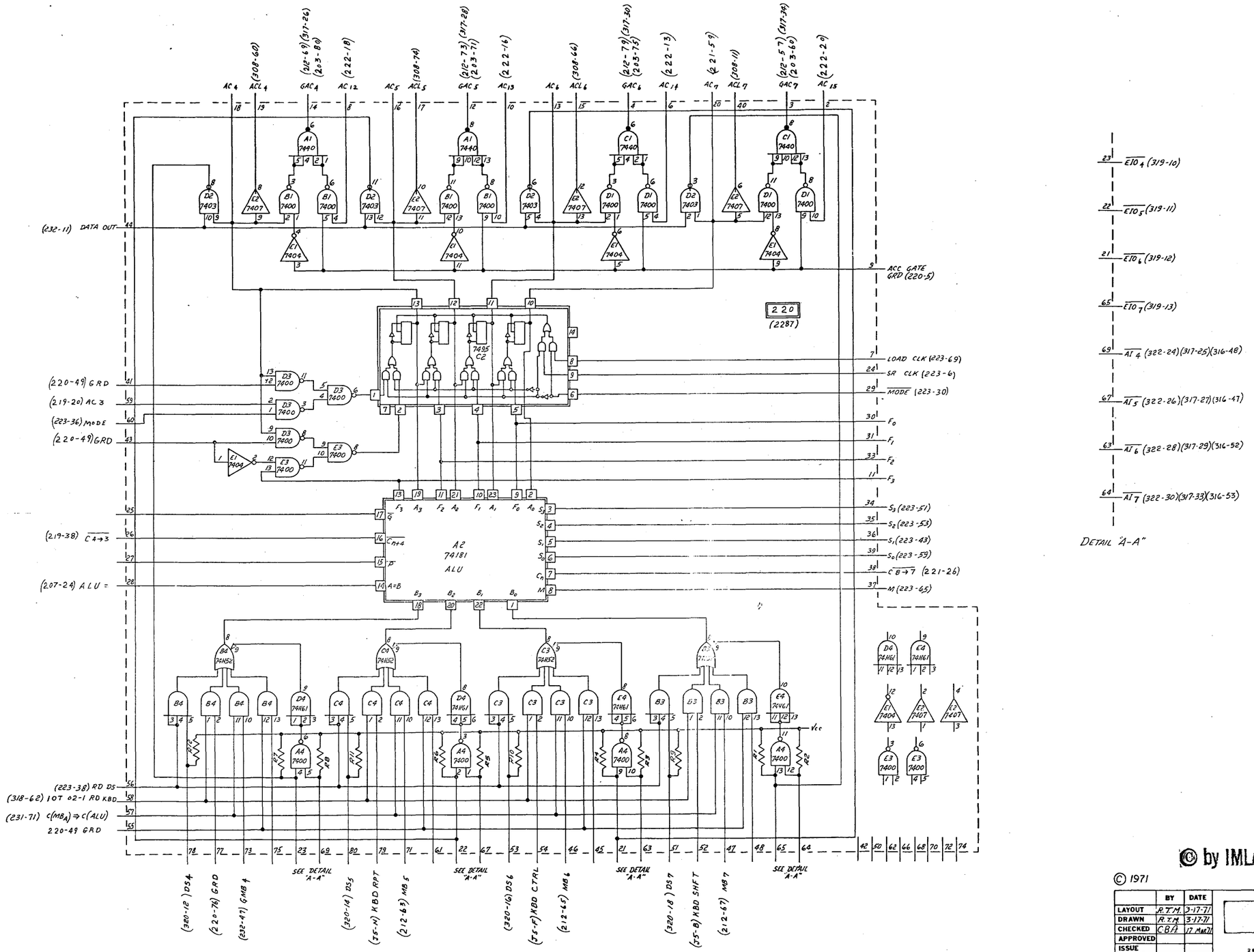

DETAIL "A-A"

REV	ECN	DATE	DRAWN	APPR'V
A	-	19 Mar 71	H.C.M.	C.B.A.
B	-	20 Mar 71	H.C.M.	C.B.A.
C	-	23 Mar 71	H.C.M.	C.B.A.
D	-	26 Mar 71	H.C.M.	C.B.A.
E	-	15 May 71	H.C.M.	C.B.A.
F	-	26 May 71	W.J.F.	[illegible]
G	-	1 Jun 71	H.C.M.	
H	-	12 Jul 71	H.C.M.	

NOTES:

1. ALL RESISTORS, UNLESS OTHERWISED SPECIFIED, ARE 1/8 W 330Ω

© by IMLAC CORP. 1970 1971 1972

© 1971

	BY	DATE
LAYOUT	R.T.M.	3-17-71
DRAWN	R.T.M.	3-17-71
CHECKED	C.B.A.	17 Mar 71
APPROVED		
ISSUE		
COPIED		
MATERIAL		

IMLAC CORPORATION
298 NEWTON STREET
WALTHAM, MASSACHUSETTS 02154

PROJECT: PROD

TITLE: ACCUMULATOR & INPUT MIXER BITS 4-7

PREFIX	SIZE	DRAWING NUMBER	REV.
L	D	822	[illegible]

Scale | Sheet

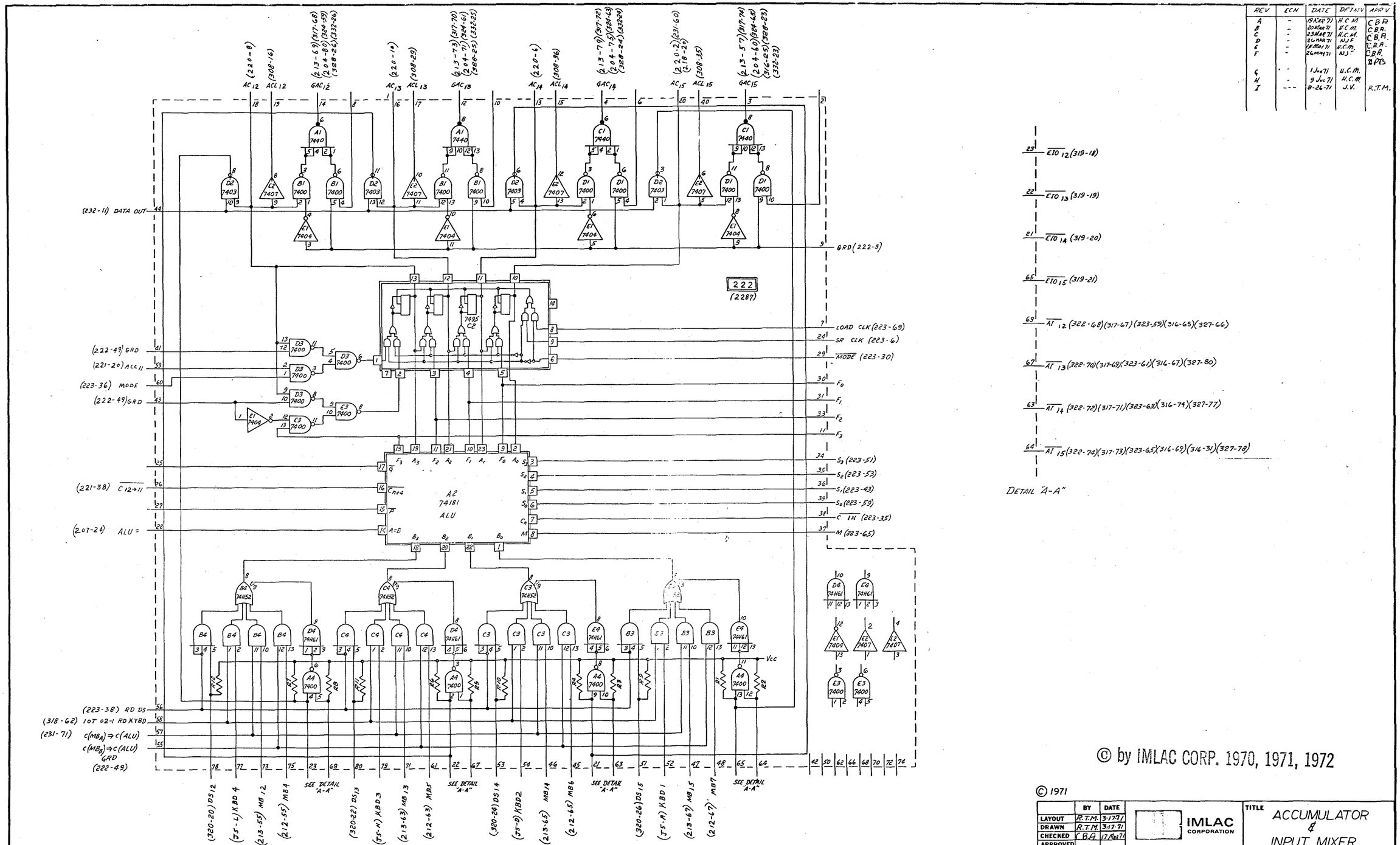

REV	ECN	DATE	DFTMN	APPV
A	-	19 MAR 71	H.C.M.	C.B.A.
B	-	20 MAR 71	H.C.M.	C.B.A.
C	-	23 MAR 71	H.C.M.	C.B.A.
D	-	26 MAR 71	N.J.F.	C.B.A.
E	-	15 MAR 71	H.C.M.	C.B.A.
F	-	26 MAR 71	N.J.F.	C.B.A.
G	-	1 JUN 71	H.C.M.	#PTB
H	-	9 JUL 71	H.C.M.	
I	---	8-26-71	J.V.	R.T.M.

© by IMLAC CORP. 1970, 1971, 1972

© 1971

	BY	DATE
LAYOUT	R.T.M.	3-17-71
DRAWN	R.T.M.	3-17-71
CHECKED	C.B.A.	17 MAR 71
APPROVED		
ISSUE		
COPIED		
MATERIAL		

IMLAC CORPORATION
288 NEWTON STREET
WALTHAM, MASSACHUSETTS 02154

PROJECT: PROD

TITLE: ACCUMULATOR & INPUT MIXER BITS 12-15

PREFIX	SIZE	DRAWING NUMBER	REV.
L	D	824	I

Scale | Sheet

NOTES:

1. ALL RESISTORS, UNLESS OTHERWISED SPECIFIED, ARE 1/8 W. 330Ω.

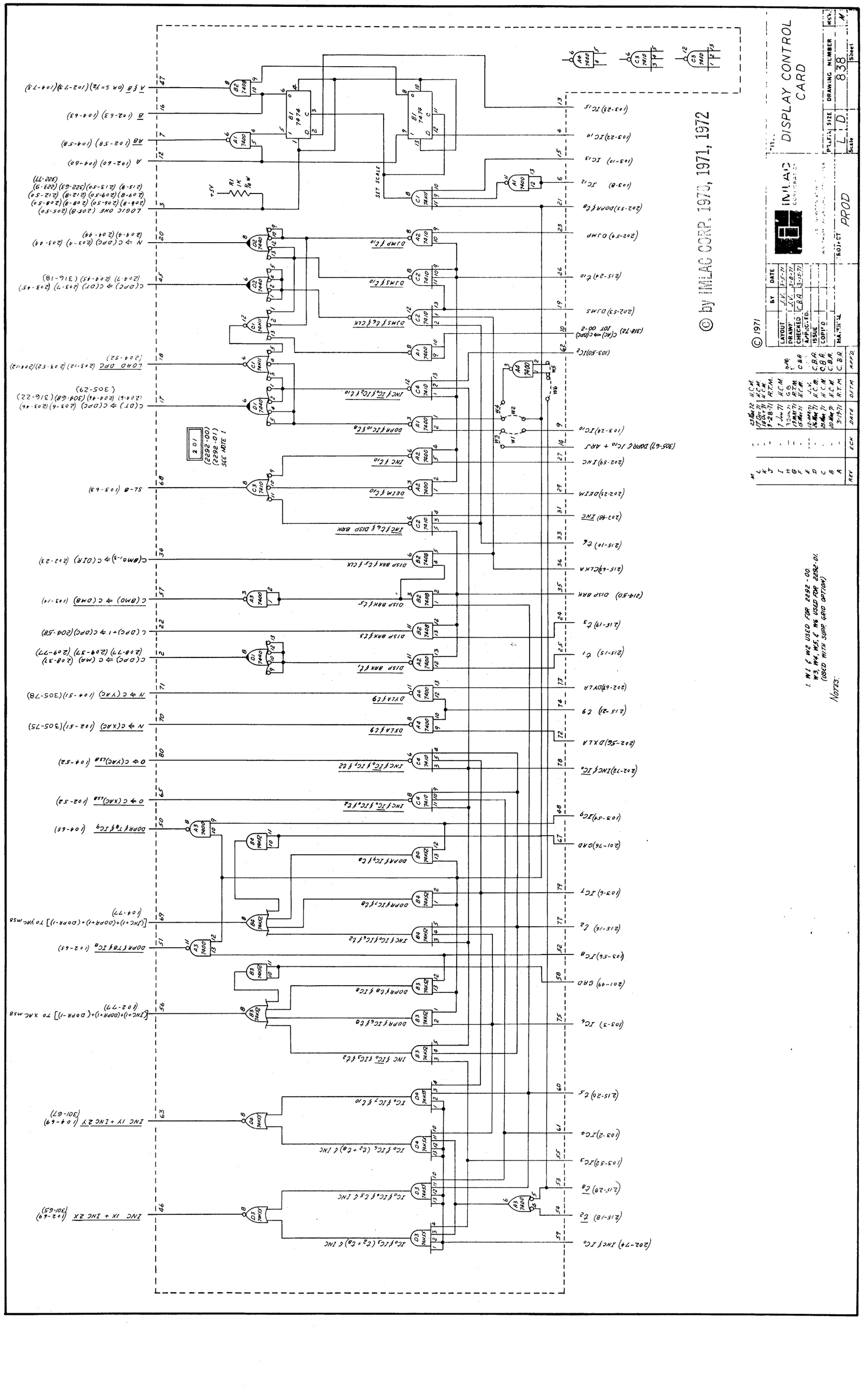
DISPLAY CONTROL CARD
IMLAC CORPORATION
PROD
DRAWING NUMBER
L D 838
SIZE
D
Sheet
REV
M
© 1971
© by IMLAC CORP. 1970, 1971, 1972
LAYOUT BY 11-5-71
DRAWN BY CBA 12-8-71
CHECKED
ISSUE
COPY 0
MA-5H-14
NOTES:
1. W1 & W2 USED FOR 2292-00
W3 & W4, W5 & W6 USED FOR 2292-01
(USED WITH SCOPE AND OPTION)
SEE NOTE 1
(2292-00)
(2292-01)
2 01
A (102-60) (104-60)
B (102-63) (104-63)
AB (102-58) (104-58)
A ∧ B (OR S=½) (102-73)(104-73)
LOGIC ONE (205-8) (205-50) (206-8) (206-50) (208-8) (208-50) (209-8) (209-50) (212-8) (212-50) (213-8) (213-50)(322-63) (223-9) (322-77)
N ⇒ C (DPC) (203-4) (205-49) (204-4) (204-49)
C(DPC) ⇒ C(DT) (203-7) (228-45) (204-7) (204-45) (229-49) (316-18)
LOAD DPC (203-12) (203-52)(204-12) (204-52)
C(DT) ⇒ C(DPC) (203-6)(203-46) (204-6) (204-46) (304-68)(316-22) (305-29)
SL-8 (103-63)
C(BMO) ⇒ C(DMB) (103-14)
C (DPC)+1 ⇒ C(DPC)(204-58)
C (DPC) ⇒ C (MA) (208-37) (208-77) (209-37) (209-77)
N ⇒ C (YAC) (104-51)(305-78)
N ⇒ C(XAC) (102-51)(305-75)
0 ⇒ C(YAC)LSB (104-52)
0 ⇒ C(XAC)LSB (102-52)
DDMF T&S ICg (104-65)
[INC+1)+(DDMF+1)+(DDMR-1)] To YAC MSB (104-77)
DDMF T&S ICa (102-65)
[INC+1)+(DDMF+1)+(DDMR-1)] To XAC MSB (102-77)
INC IX + INC 2X (102-69) (301-65)
INC 1Y + INC 2Y (104-69) (301-67)
(202-79) INC f ICa
(215-18) ta
(215-28) tg
(103-52) ICg
(103-32) ICa
(215-24) tia
(202-55) DDMA f ta
(202-59) DUMP
(215-24) tio
(202-53) DUMS
(318-72) C(AC) ⇒ C(DMC) JOT 00-2
(103-50) IC2
(305-67) DDMR f ICio + ARS
(202-59) INC
(202-29) DEIM
(202-40) INC
(215-10) tL
(215-6) CLKA
(214-50) DISP BRK
(215-19) tS
(215-15) ti
(202-69) DYLA
(215-21) t9
(202-56) DXLA
(202-72) INC f ICa
(103-59) IC9
(201-76) GRD
(103-6) IC7
(215-16) t2
(103-56) IC8
(201-49) GRD
(103-3) IC6
(215-26) t5
(103-2) IC4
(103-53) IC3
(215-28) t4
(202-74) INC f ICa
IC0 f IC3 (t2 + t8) ¢ INC
IC0 f IC4 (t2 + t8) ¢ INC
IC0 f IC7 f t5 ¢ INC
IC0 f IC6 f t4 ¢ INC
INC f IC6 f IC3 f t2
DDMR f IC6 f t8
DDMR f IC7 f t8
DDMR f IC8 f t8
INC f IC8 f IC9 f t2
INC f IC8 f IC4 f t2
DDMR f IC9 f t8
DISP BRK f t5
DISP BRK f tS
DISP BRK f CLK
INC f tL
DELM f tio
INC f tio
DDMR f IC0 f t8
DUMS f t4 f CLK
DUMS f tio
DUMP f tio
DXLA f t9
DYLA f t9
INC f IC0 f IC7 f t2
INC f IC0 f IC4 f t2
DDMR f IC9 f t8
DDMR f IC8 f t8
DDMR f IC7 f t8
DDMR f IC6 f t8
INC f IC6 f IC3 f t2
IC0 f IC7 (t2 + t8) ¢ INC
IC0 f IC4 (t2 + t8) ¢ INC
IC0 f IC3 f t5 ¢ INC
IC0 f IC6 f t4 ¢ INC
A1 7400
A2 7400
A3 7400
A4 7400
B1 7474
B2 7408
B3 7486
C1 74H11
C2 7410
C3 7410
C4 7410
D1 7400
D2 7400
D3 7408
D4 7408
E1 7400
E2 7400
E3 7486
E4 7486
W1
W2
W3
W4
W5
W6
SIP 1K ¼W
5 4 3 2 1
5 4 3 2 1
5 4 3 2 1

REV	ECN	DATE	DFTMN	APPVD
				C.B.A.
B	-	3 JUN 71	G.B.	
C	-	7 JUN 71	H.C.M.	
D	-	28 SEP 71	G.B.	
E	-	11 FEB 72	H.C.M.	
F	-	3 MAR 72	R.T.M.	

223
(2303)
(OR 2303-01)
SEE NOTE 1

NOTES:
1. ON ASSY 2303-01, PKGS A2, C2, E1, ARE 74H04; PKGS E4, D4, B2, A4, ARE 74H00; PKGS E3, C3, A3, E2, D2 ARE 74H10; PKG B3 IS 74H20

© 1971
© by IMLAC CORP. 1970, 1971, 1972

	BY	DATE
LAYOUT	J.V.	3-29-71
DRAWN	J.V.	3-29-71
CHECKED	C.B.A.	4-2-71
APPROVED		
ISSUE		
COPIED		
MATERIAL		

IMLAC CORP.

TITLE: ACCUMULATOR CONTROL

PROJECT: PROD

PREFIX	SIZE	DRAWING NUMBER	REV.
L	D	840	F

Scale: Sheet

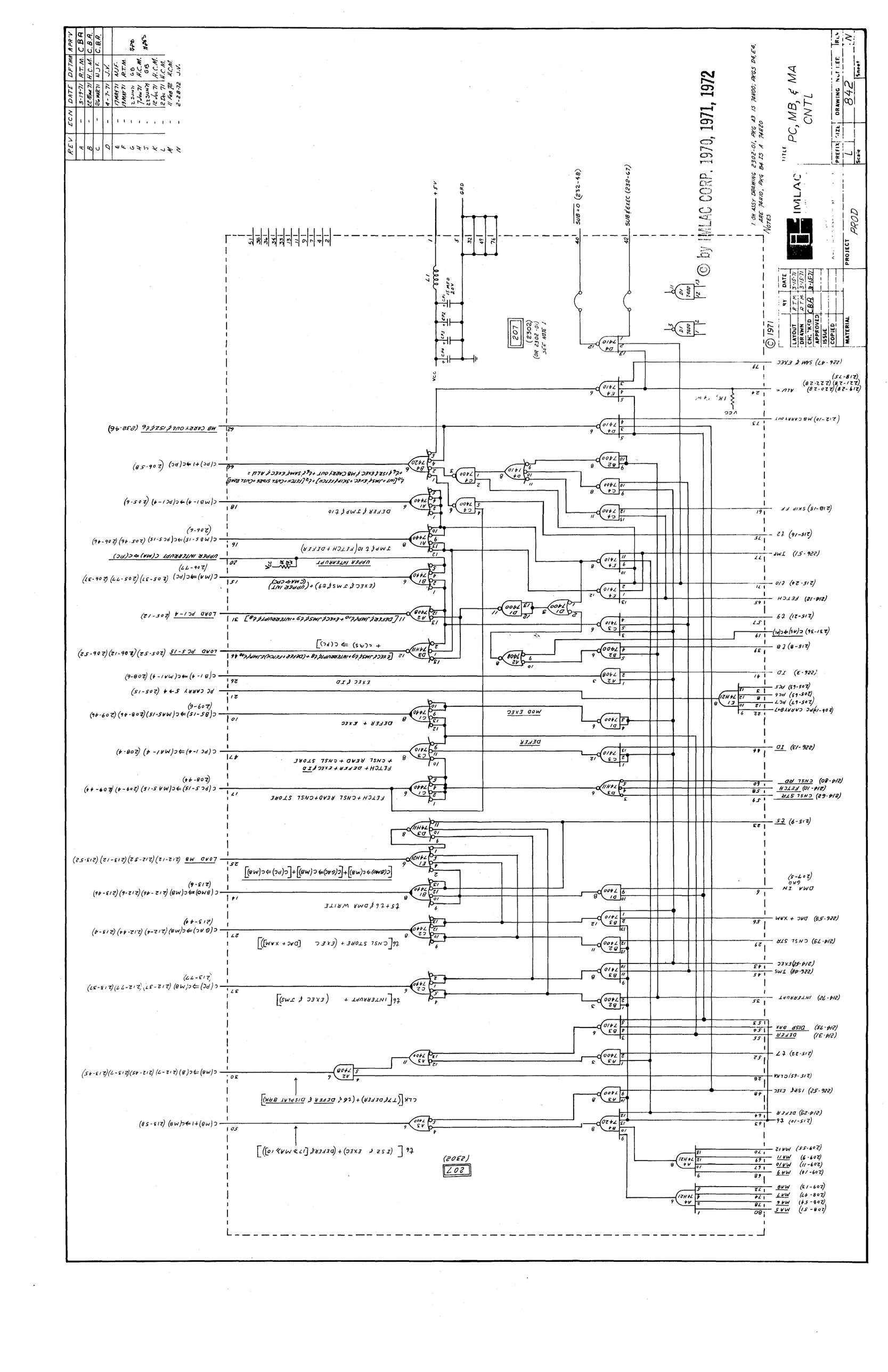
REV | ECN | DATE | DFTM | APP'V
A | - | 3-19-71 | R.T.M. | C.B.A.
B | - | 28 MAY 71 | H.C.M. | C.B.A.
C | - | 26 MAY 71 | W.J.F. | C.B.A.
D | - | 4-7-71 | J.V. |
E | - | 17 MAY 71 | W.J.F. |
F | - | 19 MAY 71 | R.T.M. |
G | - | 2 JUNE 71 | G.B. |
H | - | 7 JUNE 71 | H.C.M. |
J | - | 23 JUNE 71 | G.B. |
K | - | 12 JUL 71 | H.C.M. |
L | - | 12 JUL 71 | H.C.M. |
M | - | 6 AUG 71 | H.C.M. |
N | - | 2-28-72 | J.V.
© BY IMLAC CORP. 1970, 1971, 1972
1. ON ASSY DRAWING 2302-01, REQ 43 IS 74H00. REQS D4, E4, ARE 74H10, REQ B4 IS A 74H20
NOTES
TITLE PC, MB, & MA CNTL
IMLAC
PREFIX | SIZE | DRAWING NUMBER | REV
Scale 1 | 842 | N
Sheet
PROJECT PROD
MATERIAL | COPIED | ISSUE | APPROVED CBA 3/15/71 | CHK'KD | DRAWN RTM 3/15/71 | LAYOUT | REV | DATE
207 (2302) (DR 2302-01)
1 ASM REQ
+5V
GRD
SUB+0 (232-48)
SUB&ECC (232-67)
VCC
1K, ¼W
+ 5 V
CLK [TTY&DEFER) + (tt& DEFER & DISPLAY BRK)]
tt [(ISR & EXEC) + (DEFER& [17≥MA) 10)]
tt [INTERRUPT + (EXEC & TMS)]
tt [CNSL STORE + (EXEC [DAC + XAM])]
t5 + t2 & DMA WRITE
DEFER + EXEC
MOD EXEC
DEFER
FETCH + DEFER + EXEC & FETCH
+ CNSL READ + CNSL STORE
FETCH + CNSL READ + CNSL STORE
LOAD MB
LOAD PC 5-15
LOAD PC1-4
UPPER INTERRUPT
DEFER & TMP & IO
EXEC & IO
PC CARRY S+4
DMA IN
INTERRUPT
DEFER
DISP BRK
CNSL STR
DAC + XAM
ISR& EXEC
TMS
CNSL RD
FETCH
CNSL STR
MB CARRY OUT & ISZ&EQ
SKIP FF
TMP
IO
FETCH
DEFER
MA CARRY OUT
MA1
MA10
MA9
MA12
MA5
MA6
MA7
MA8
MB CARRY OUT
ALU =
SAM & EXEC
PC, MB, & MA CNTL

REV	ECN	DATE	DFTMN	APR'V
A	--	8-25-71	J.V.	
B	---	23SEP71	GB	

© by IMLAC CORP. 1970, 1971, 1972

© 1971

	BY	DATE
LAYOUT	H.C.M.	5 Mar 71
DRAWN	H.C.M.	8 Mar 71
CHECKED	CBA	3-19-71
APPROVED		
ISSUE		
COPIED		
MATERIAL		

IMLAC CORPORATION
288 NEWTON STREET
WALTHAM, MASSACHUSETTS 02154

PROJECT: PROD

TITLE: MEMORY OUTPUT BUFFER

PREFIX	SIZE	DRAWING NUMBER	REV
L	D	843-A	B

Scale

Sheet

NOTES:
1. RESISTORS R1-R16 ARE 1K 1/8 W.
2. Δ USED ON 16K ONLY

REV	ECN	DATE	DFT'N	APR'V
A	-	3 MAY 71	R.T.M.	C.B.A.
B	-	20 MAY 71	R.T.M.	C.B.A.
C	-	1 Jun 71	H.C.M.	C.B.A.
D	-	18 Jul 71	H.C.M.	C.B.A.
E	-	23 SEP 71	GB	HPB
F	-	26 OCT 71	R.T.M.	

(102-52) (102-49) (102-27) (102-57) (102-31) (102-56) (102-33) (102-24) (102-35) (102-25) (102-42) (102-6) (102-20) (102-37)

61 59 57 55 73 75 77 63 69 65 67 71 53 79

1K R14 · 1K R15 · 1K R16 · 1K R17 · 1K R18 · 1K R19 · 1K R20 · 1K R21 · 1K R22 · 1K R24 · 1K R23 · 1K R25 · 1K R26 · 1K R98

Q1 Q2 Q3 Q4 Q5 Q6 Q7 Q8 Q9 Q10 Q11 Q12 Q13 Q21

+15V

THIRD FROM TOP

2K R48 OFFSET · .05μf C5 · 1N821 CR35 · 4.7K R47

1K R49

220Ω R46 · 1.78K R45 · 1.78K R40 · 249Ω R52 · 287Ω R42 · 5K R43 ASPECT TOP · 2K R44

CR2 CR4 CR6 CR8 CR10 CR12 CR14 CR16 CR18 CR20 CR22 CR24 CR26

CR1 1.5K R27 · CR3 1.5K R28 · CR5 1.5K R29 · CR7 1.5K R30 · CR9 1.5K R31 · CR11 1.5K R32 · CR13 1.5K R33 · CR15 1.5K R34 · CR17 1.5K R35 · CR19 1.5K R36 · CR21 1.5K R37 · CR23 1.5K R38 · CR25 1.5K R39

249Ω WW R41

-2.7V

3.3K R50

CR28 DA1702 · CR27 DA1702

MPS 6515 Q16

3.01K 1% R61 · 4.53K 1% R60 · 1.78K 1% R62 · 5.1V CR34 · IN914 CR29 · MPS 6515 Q17

3.3K R66 · 5.6K R67

IN914 CR30 · .05μf C3 · IN821 CR31 · 2.0K 1% R65 · IN914 CR32 · MPS 6515 Q18 · IN914 CR33 · 1K 1% R63 · 715Ω 1% R64 · -15V

A1 A1 A2 A2 A3 A3

5.9K 1% R1 · 5.76K 1% R7 · 11.8K 1% R2 · 11.8K 1% R8 · 23.7K 1% R3 · 23.7K 1% R9 · 5.76K 1% R4 · 5.9K 1% R10 · 11.8K 1% R5 · 11.8K 1% R11 · 23.7K 1% R6 · 23.7K 1% R12 · 47.5K 1% R13 · R51 100K 5%

R102 500Ω · R104 500Ω · R103 500Ω · R100 1K · R101 500Ω

.05μf C4

1K R69 · CR36 · 6.8K R74 · 1K R68 · 2N4248 Q23 · MPS6515 Q24 · 3pf C7 · 12K R76 · .01 C6 · 1K R75 · MPS 6515 Q25

220Ω R77 · 27K R78 · 1K R79 · MPS6515 Q27 · 4.3K R83 · 6.2V CR37 · 2N4248 Q22 · 2N4248 Q28 · CR38 · CR39 · 2N4248 Q29 · 3.3K R76 · 220Ω R84 · 7.5K R71 · 5K R73 GAIN SECOND FROM TOP

2N5555 Q27 · .01 C9

750Ω R80 · 47Ω R81 · 2N2907 Q33 · MPS6515 Q30 · 8pf C8 · 100Ω R82 · 351 Y OUTPUT · 331 GND · J3-R

CR41 · CR42 · 27Ω R85 · CR40 · 2N4248 Q31 · 2N2222 Q32 · 4.3K R86 · .05μf C10 · 2.7K R87 · 510Ω R88

-15V

+15V

5.6K R89 · 3.3K R90 · CR46 · MPS6519 Q34 · CR43 · 3.3K R92 · 1K R91 · 2N3646 Q35 · 10K R95 · 5.6K R96 · C12 56pf · 390Ω R97 · CR44 · 2N3646 Q36 · 3.3K R94 · CR45 · 5pf C13 · 56pf C14 · C11 SEE NOTE 5

-15V

R99 3K 1/4W · CR 47 FD6666

101 (2293)

7 HOLD (218-12)

+15V 2 · +15VF · 6.8μf 35V C1 · GRD 5, 49, 76 · 6.8μf 35V C2 · 3 · -15V · -15VF

+15V · 1.2K R54 · 180Ω 1W R56 · MPS 6515 Q19 · 220Ω R55 · +15V

-15V · 3.3K R57 · 270Ω 1/2W R59 · MPS 6519 Q20 · 1K R58 · -27V

NOTES:

7. DO NOT INSTALL Q37 UNTIL FINAL TEST.
6. RESISTORS RT 1 – RT 4 ARE CARBON COMP, 1/4 W 5% WITH VALUES WHICH ARE DETERMINE AT FINAL ELECTRICAL TEST, ALSO TO RT 7
5. CAPACITOR VALUE TO BE ADJUSTED FOR MINIMUM PEDESTAL PER THE TEST PROCEDURE.
4. ALL RESISTORS ARE 1/4 W CARBON COMP, UNLESS OTHERWISE SPECIFIED.
3. A1, A2, A3 ARE RCA CA3046 TRANSISTOR ARRAYS.
2. ALL DIODES ARE DA 1702, UNLESS OTHERWISE SPECIFIED.
1. Q1 – Q13, & Q22 ARE 2N5055.

© by IMLAC CORP. 1970, 1971, 1972

© 1971

	BY	DATE
LAYOUT	H.C.M.	18 Feb 71
DRAWN	H.C.M.	22 Feb 71
CHECKED	C.B.A.	22 MAR 71
APPROVED		
ISSUE		
COPIED		
MATERIAL		

IMLAC CORPORATION
296 NEWTON STREET
WALTHAM, MASSACHUSETTS 02154

PROJECT PROD

TITLE: D TO A CONVERTER X AXIS

PREFIX	SIZE	DRAWING NUMBER	REV.
		844	F

Scale · Sheet

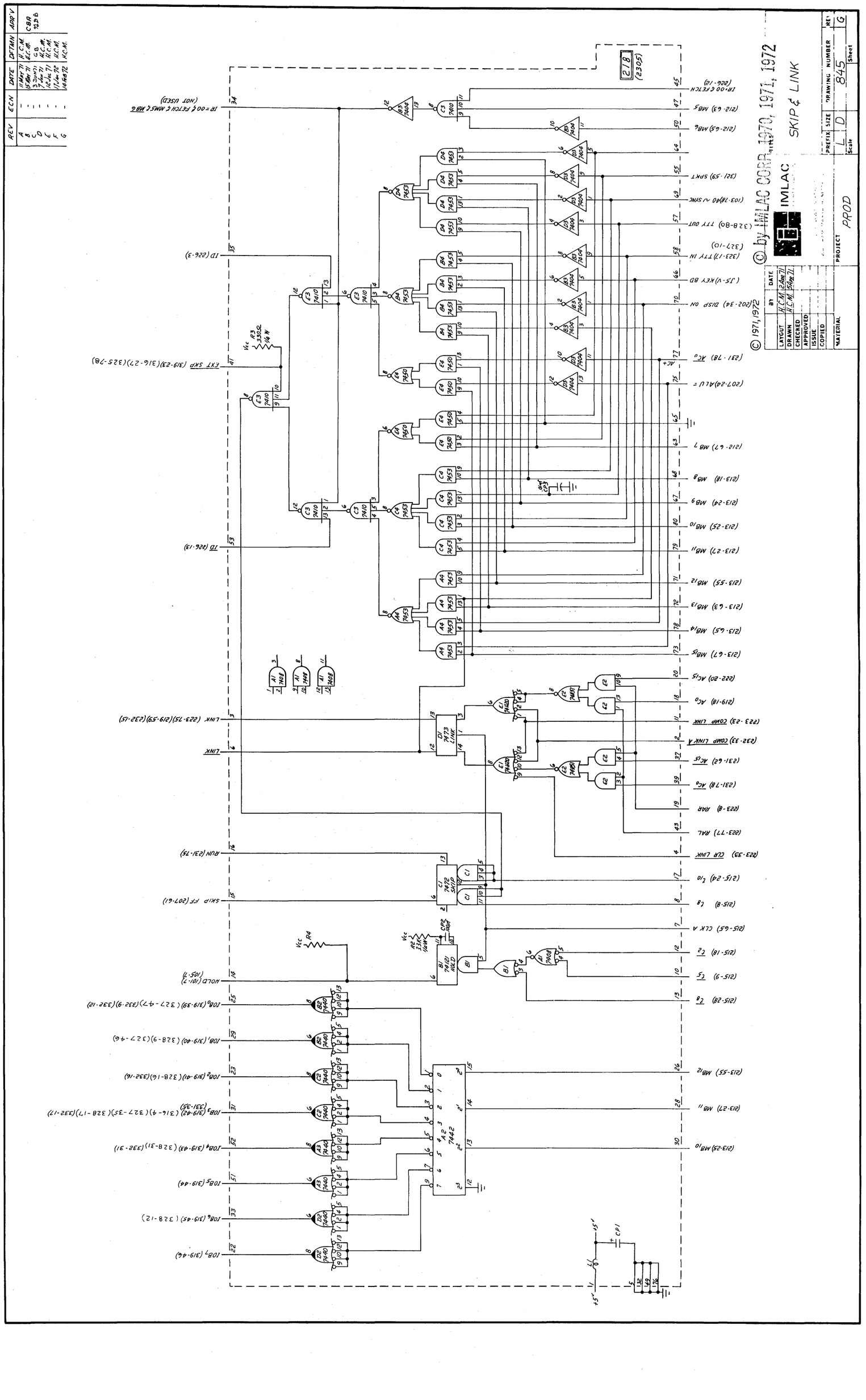
SKIP & LINK
IMLAC
PROD
DRAWING NUMBER 845
PREFIX L
SIZE D
Sheet
REV G
PROJECT
MATERIAL
LAYOUT
DRAWN
CHECKED
APPROVED
ISSUE
COPIED
BY
DATE
© by IMLAC CORP. 1970, 1971, 1972
© 1971, 1972
(2305)
IR=00¢ FETCH¢ MMS¢ MB6 (NOT USED)
IR (00 ¢ FETCH (206-15)
(212-63) MB5
(212-65) MB6
(321-59) SPKT
(103-78)40 ~ SINK
(328-80) TTY OUT
(323-17) TTY IN (327-10)
(J5-V) KEY BD
(202-34) DISP ON
(231-78) AC0
(207-24) ALU =
(212-67) MB7
(213-18) MB8
(213-24) MB9
(213-25) MB10
(213-27) MB11
(213-55) MB12
(213-63) MB13
(213-65) MB14
(213-67) MB15
(222-20) AC15
(219-18) AC0
(223-23) COMP LINK
(232-33) COMP LINK A
(231-62) AC15
(231-78) AC0
(223-8) MAR
(223-77) MAL
(223-33) CLR LINK
(215-24) I/O
(215-8) I8
(215-65) CLK A
(215-18) I2
(215-9) I1
(215-28) I0
(213-25) MB10
(213-27) MB11
(213-55) MB12
ID (226-3)
ID (226-13)
EXT SKP (319-23)(316-27)(325-78)
LINK (223-75)(219-59)(232-15)
LINK
RUN (231-75)
SKIP FF (207-61)
HOLD (101-7) (105-7)
IOB0 (319-39)(327-47)(332-9)(332-10)
IOB1 (319-40) (328-9)(327-46)
IOB2 (319-41)(328-16)(332-16)
IOB3 (319-42) (316-4)(327-35)(328-17)(332-17) (331-35)
IOB4 (319-43) (328-31)(332-31)
IOB5 (319-44)
IOB6 (319-45) (328-12)
IOB7 (319-46)
Vcc R3 330Ω ¼W
Vcc R4
Vcc R2 3KΩ ¼W
.05μf
.001μf
+5V
CR1
1N4148
1N4148
1N4148
7400 7401 7402 7403 7404 7405 7406 7407 7408 7409 7410 7411 7412 7413 7414 7415 7416 7417 7418 7419 7420 7421 7422 7423 7424 7425 7426 7427 7428 7429 7430 7431 7432 7433 7434 7435 7436 7437 7438 7439

REV	ECN	DATE	DFTM	APP'D	REV	ECN	DATE	DFTMN	APP'V
					A	-	12 APR 72	R.T.M.	

IOT 001 (319-38)
IOT 002 (319-37)
IOT 012 (319-36)
IOT 022 (319-35)
IOT 032 (319-34)
IOT 042 (319-33)(331-23)(332-15)
A1 (316-10)(316-12)(325-55)
A0 (327-33)(331-48)(328-27)(325-36)
IOT 002
(IOT 002 → C(DPC) C(AC) → C(DPC) (201-18)(229-57)) RESET TTY (204-77)(203-77)
IOT 012 STOP DISPLAY (202-11)
IOT 022 CLR KEYBOARD FLAG AND STATUS
IOT 032 CLEAR TTY STATUS
IOT 042 INPUT (324-4)(323-28)
IOT 052 CLR TTY OUTPUT STATUS (324-29)
IOT 062 STOP PTR (226-73)
IOT 072 SET BRKEM
IOT 072 TEST SCOPE SYNC.
IOT 102
IOT 112
IOT 122 CLR TIMER STATUS (317-25)
IOT 132 CLR LP STATUS
IOT 142
IOT 152
IOT 162 ENABLE INTERRUPT (214-61)
IOT 172
P3 (314-6)(332-18)(331-45) (325-34)
IOP 3 (319-50)
RUN (231-35)
IOP 2 (319-48)
IOP 1 (319-47)
(316-15)(328-29)
P2 (327-23)(332-29)
P1 (327-9)(328-11) (331-9)(332-11)

B4 7442
A2 7442
B3 7442
A3 7442
D2 7442

A4 7440
D4 7440
E1 7440
E2 7440
D3 7440
D1 7440
C4 7404
C2 7404
E4 7404
C3 7404
A4 7404
C1 7472
B2 7400
B1 7410
D3 7446
W1
W2
W3
CP1
L1

318
(2272)

(213-55) MB12
(213-47) MB11
(213-25) MB10
(212-67) MB7
(213-18) MB8
(213-26) MB9
(203-8)(203-50) (204-8)(204-50) IOT 001 C→C(DPC)
IOT 011 CLR BRK
IOT 021 READ KEYBD (222-58)(221-58) (220-58)(224-60)
IOT 031 READ TTY (212-44)(323-23) READ TTY SYNCHR INPUT
IOT 041 READ PTR (324-31)
IOT 051 LOAD TTY (322-75)
IOT 061 START PTR (226-75)
IOT 071 CLR SYNC (103-27)
IOT 101 READ STATUS (316-34)(332-45) (317-60)
IOT 111 LOAD TIMER (317-75) IOT 121
IOT 131 READ L.P. BUFFER (316-30) IOT 131
READ CDB
IOT 141 ARM INTERRUPTS (316-21)(317-20)
IOT 151 READ TIMER (317-36)
IOT 161 DISABLE INTER (214-53)
IOT 171 (232-37)
CLK B (205-79)
(226-18) IR→100 & FETCH
MB6 (212-65)
MB5 (212-51)
MB3 (213-63)
MB4 (213-65)
L10 (215-24)
MB2 (213-67)
L6 (215-10)
IOT 001 XXX (223-29) (232-41)

NOTE: Δ USED ON 16K ONLY

© by IMLAC CORP. 1970, 1971, 1972

© 1971, 1972 DRAWING MADE FROM 847 12 APR 72 P.T.M.

	BY	DATE
LAYOUT	H.C.M.	19 MAR 71
DRAWN	H.C.M.	19 MAR 71
CHECKED	C.B.A.	3-19-71
APPROVED		
ISSUE		
COPIED		

IMLAC CORP.

TITLE: IOT CONTROL

MATERIAL

PROJECT: PROD

PREFIX	SIZE	DRAWING NUMBER	REV
L	D	847-A	A

Scale

Sheet

REV	ECN	DATE	DFTMN	APR'V
B	–	2 JUN 71	GB	[illegible]
C	–	7 JUN 71	H.C.M.	
D	---	8-26-71	J.V.	
E	–	11 FEB 72	H.C.M.	

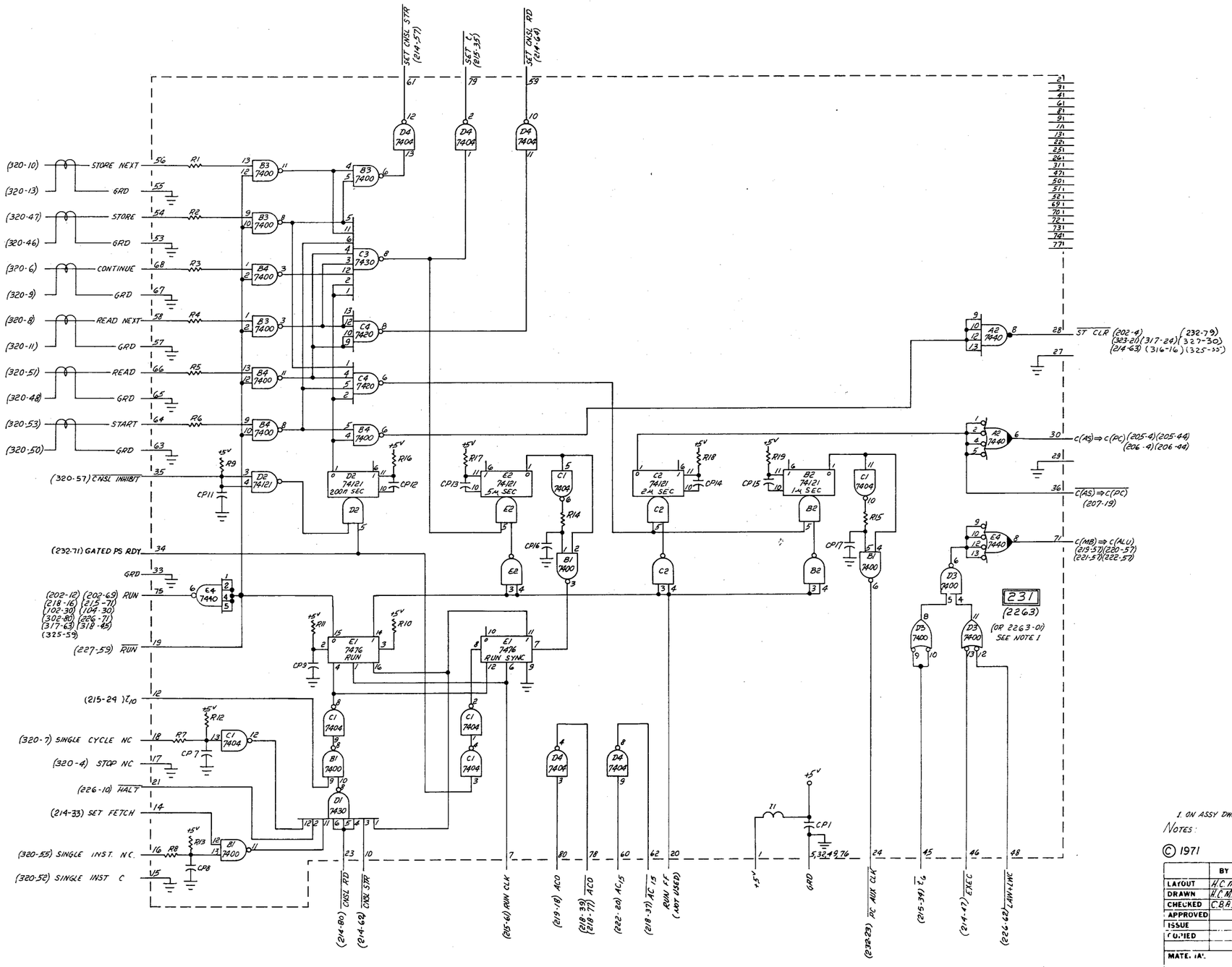

© by IMLAC CORP 1970, 1971, 1972

1. ON ASSY DWG 2263-01, PKG D3 IS A 74H00N, PKG E4 IS A 74H40

NOTES:

© 1971

	BY	DATE
LAYOUT	H.C.M.	26 MAR 71
DRAWN	H.C.M.	29 MAR 71
CHECKED	C.B.A.	29 MAR 71
APPROVED		
ISSUE		
COPIED		
MATERIAL		

IMLAC

PROJECT PROD

TITLE RUN CONTROL

PREFIX	SIZE	DRAWING NUMBER	REV.
L	D	848	E

Scale

Sheet

REV	ECN	DATE	DFTMN	APP'V
A	-	11 APR 72	R.T.M.	

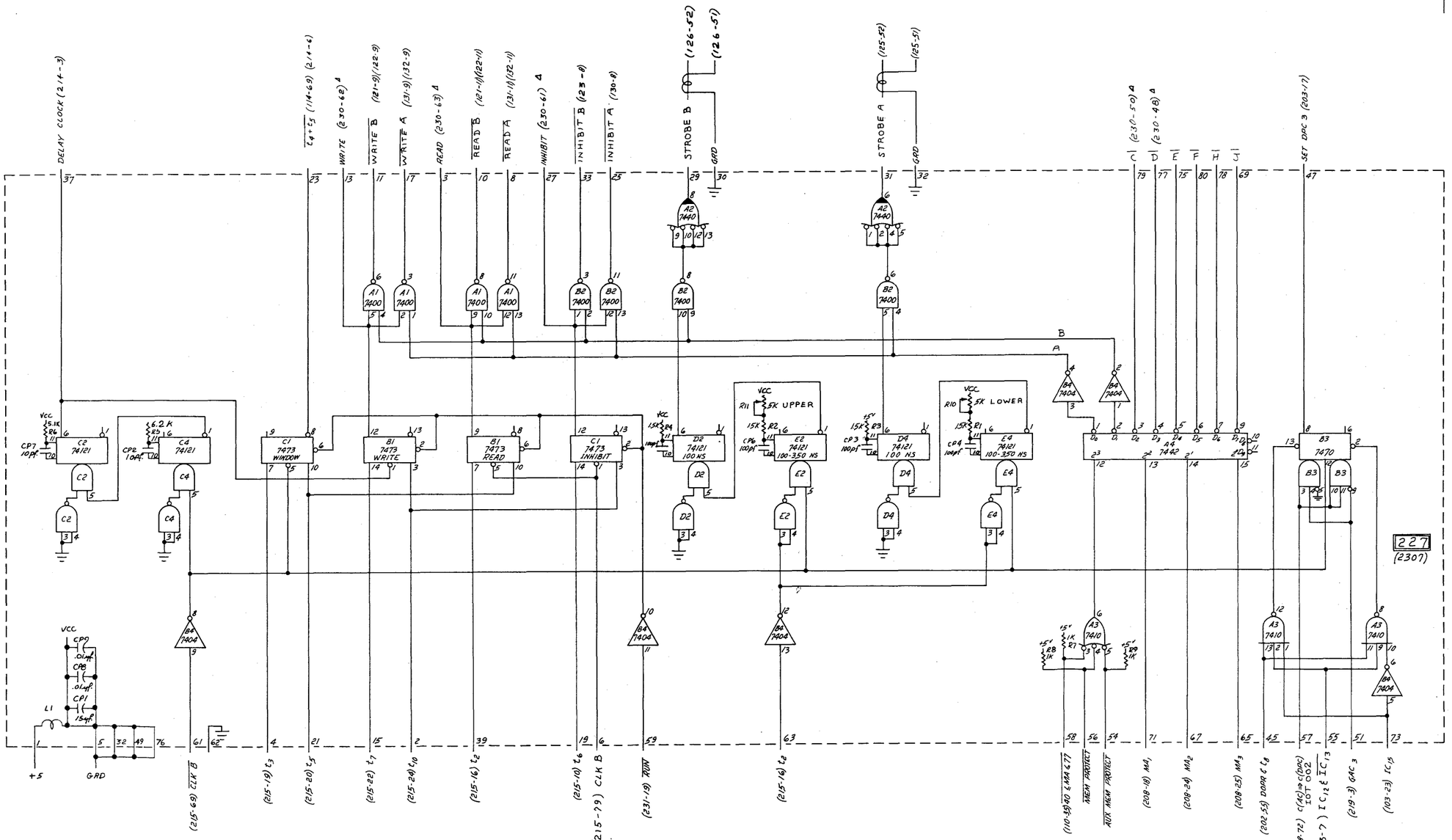

© by IMLAC CORP. 1970, 1971, 1972

NOTE 1: Δ USED ON 16K ONLY

© 1971 MADE FROM 849 15 DEC 71 R.T.M.

	BY	DATE
LAYOUT	H.C.M	30 MAR 71
DRAWN	H.C.M	31 MAR 71
CHECKED	C.B.A	1 APRIL 72
APPROVED		
ISSUE		
COPIED		
MATERIAL		

IMLAC

PROJECT: PROD

TITLE: MEMORY CONTROL

PREFIX	SIZE	DRAWING NUMBER	REV.
L	D	849-A	A

Scale

Sheet

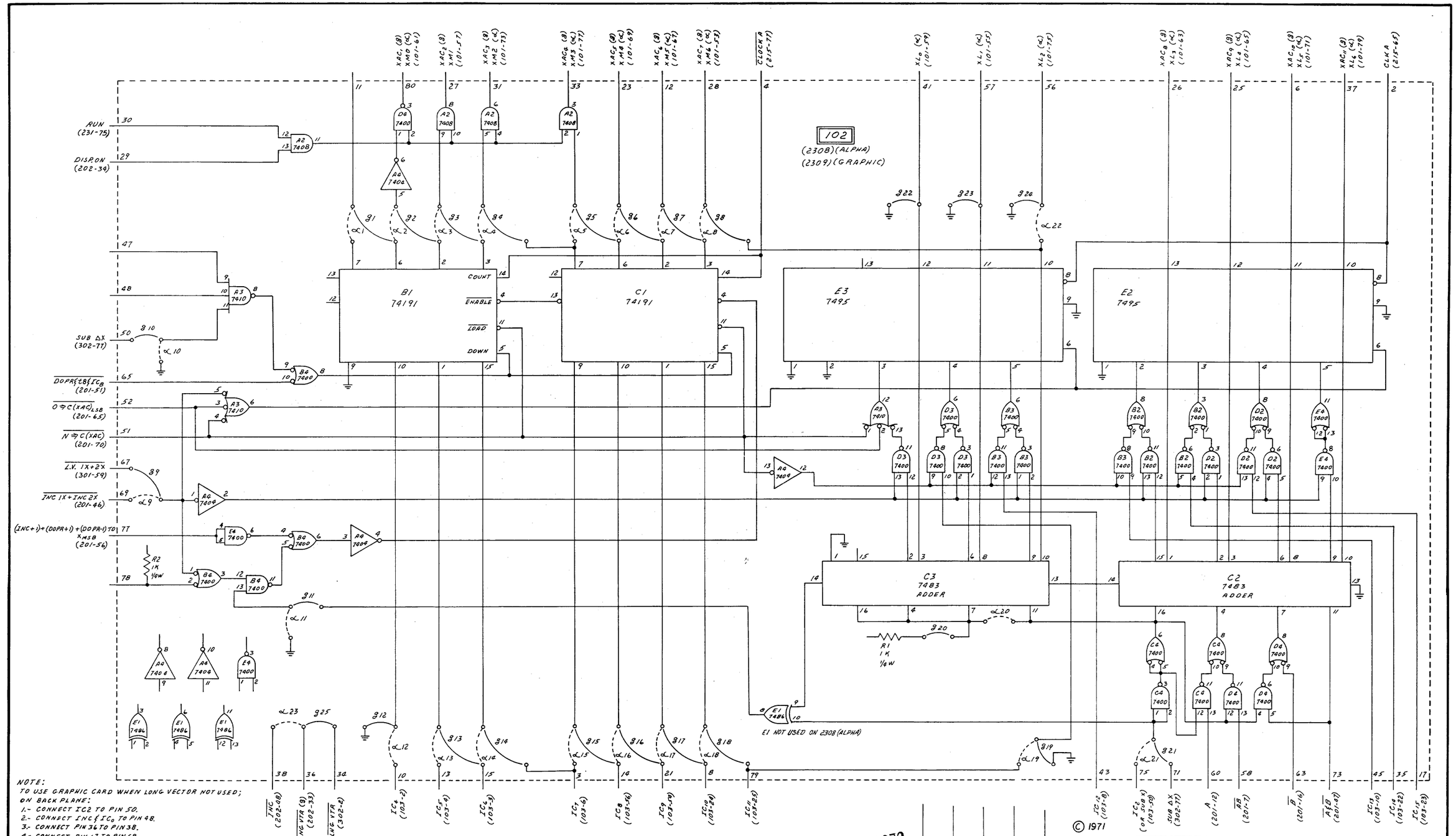

NOTE:
TO USE GRAPHIC CARD WHEN LONG VECTOR NOT USED;
ON BACK PLANE:
1.- CONNECT IC2 TO PIN 50.
2.- CONNECT INC & IC0 TO PIN 48.
3.- CONNECT PIN 36 TO PIN 38.
4.- CONNECT PIN 67 TO PIN 69.
5.- CONNECT PIN 71 TO PIN 75.
MACHINE CAN THEN BE USED WITH α CARD ALSO.

© by IMLAC CORP. 1970, 1971, 1972

© 1971

REV	ECN	DATE	DFTM.	APP'D.
F	-	29 Dec 71	H.C.M.	
E	---	9-13-71	J.V.	
D	---	8-26-71	J.V.	
C	-	1 Jun 71	H.C.M.	
B	-	20 MAY 71	R.T.M.	

	BY	DATE
LAYOUT	J.V.	3-22-71
DRAWN	J.V.	3-22-71
CHECKED	CBA	3-25-71
APPROVED		
ISSUE		
COPIED		
MATERIAL		

IMLAC

TITLE: X DISPLAY ACCUMULATOR

PROJECT: PROD

PREFIX	SIZE	DRAWING NUMBER	REV
L	D	850	F

Scale | Sheet

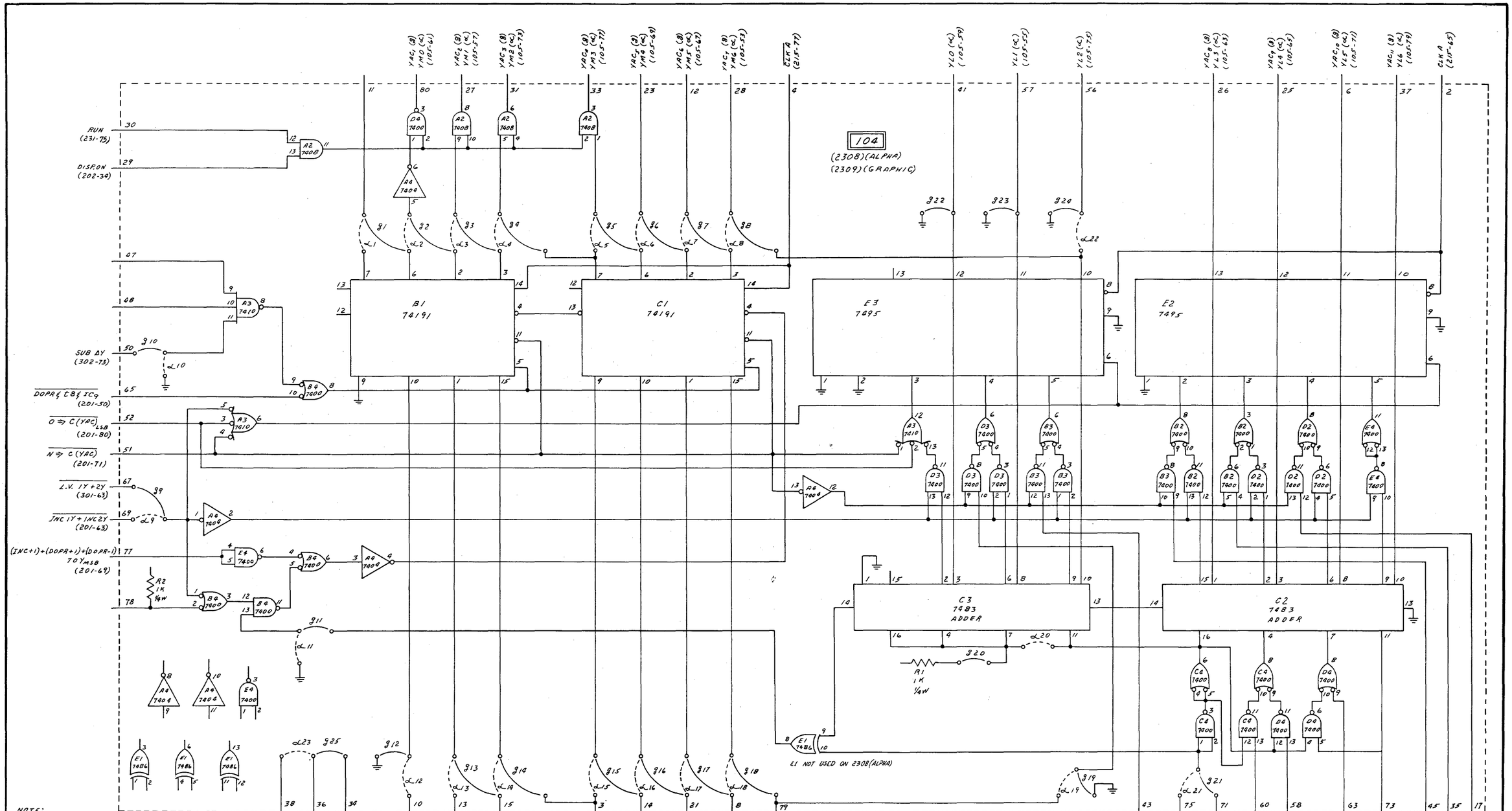

NOTE:
α = CONNECTIONS FOR ALPHA MACHINE.
g = CONNECTIONS FOR GRAPHIC MACHINE.
TO USE GRAPHIC CARD WHEN LONG VECTOR NOT USED;
ON BACK PANEL:
1.- CONNECT IC_5 TO PIN 50.
2.- CONNECT INC & IC_0 TO PIN 48.
3.- CONNECT PIN 36 TO PIN 38.
4.- CONNECT PIN 67 TO PIN 69
5.- CONNECT PIN 71 TO PIN 75,
MACHINE CAN THEN BE USED WITH α CARD ALSO.

© by IMLAC CORP. 1970, 1971, 1972

REV	ECN	DATE	DFTM	APP'D
G	-	15 JAN 72	R.T.M.	
F	-	29 Dec 71	H.C.M.	
E	-	9-13-71	J.V.	
D	-	8-26-71	J.V.	
C	-	1 Jan 71	H.C.M.	
B	-	20 MAY 71	R.T.M.	
-	-	[illegible]		

© 1971

	BY	DATE
LAYOUT	J.V.	3-22-71
DRAWN	J.V.	3-22-71
CHECKED	C.B.A.	4-7-71
APPROVED		
ISSUED		
COPIED		
MATERIAL		

IMLAC

PROJECT: PROD

TITLE: Y DISPLAY ACCUMULATOR

PREFIX	SIZE	DRAWING NUMBER	REV.
L	D	851	G

Scale: Sheet

REV	ECN	DATE	DFT'MN	APP'V
A	-	[illegible] 71	R.J.	[illegible]
B	-	17Mar 71	H.C.M.	[illegible]
C	-	12 Jan 71	H.C.M.	[illegible]
D	-	[illegible] 71	R.J.	[illegible]
E	-	26 Oct 71	R.T.M.	[illegible]

(104-30) (104-4) (104-27) (104-57) (104-31) (104-54) (104-33) (104-26) (104-23) (104-25) (104-12) (104-6) (104-28) (104-37)

61 59 57 55 13 15 77 63 69 65 67 71 53 79

1K R14 · 1K R15 · 1K R16 · 1K R17 · 1K R18 · 1K R19 · 1K R20 · 1K R21 · 1K R22 · 1K R24 · 1K R23 · 1K R25 · 1K R26 · 1K R98

Q1 Q2 Q3 Q4 Q5 Q6 Q7 Q8 Q9 Q10 Q11 Q12 Q13 Q21

+15V

THIRD FROM TOP

1K R49 · 2K OFFSET R48 · .05μf C5 · IN821 CR35 · 4.7K R47

220Ω R46

1.78K R45 · 1.78K R40 · 249Ω R52 · 5K R43 · 2K R44 · ASPECT · 287Ω R42

CR1 1.5K R27 · CR2 · CR3 1.5K R28 · CR4 · CR5 1.5K R29 · CR6 · CR7 1.5K R30 · CR8 · CR9 1.5K R31 · CR10 · CR11 1.5K R32 · CR12 · CR13 1.5K R33 · CR14 · CR15 1.5K R34 · CR16 · CR17 1.5K R35 · CR18 · CR19 1.5K R36 · CR20 · CR21 1.5K R37 · CR22 · CR23 1.5K R38 · CR24 · CR25 1.5K R39 · CR26 · 249Ω W1 R41

-2.7V

3.3K R50

CR28 DA1702 · CR27 DA1702

MPS 6515 Q16

301K 1% R61 · 453K 1% R60 · 178K 1% R62 · 5.1V CR34 · MPS 6519 Q17 · IN914 CR29 · IN914 CR30 · IN821 CR31 · 20K 1% R65 · IN914 CR32 · IN914 CR33 · 1K 1% R63 · 75Ω 1% R64 · -15V

MPS 6515 Q14 · MPS 6515 Q15 · 3.3K R66 · 5.6K R67 · .05μf C3 · .05μf C4 · MPS 6515 Q18

A1 A1 A2 A2 A3 A3

5.9K 1% R1 · 5.76K 1% R7 · 11.8K 1% R2 · 11.8K 1% R8 · 23.7K 1% R3 · 23.7K 1% R9 · 5.76K 1% R4 · 5.9K 1% R10 · 11.8K 1% R5 · 11.8K 1% R11 · 23.7K 1% R12 · 475K 1% R13 · R51 100K 5%

R102 500Ω · R104 500Ω · R103 500Ω · R100 1K · R101 500Ω

1K R53 · 1.78K R70 · 5K R73 GAIN SECOND FROM TOP · 75K R71

1K R68 · 1K R69 · CR36 · 2N4248 Q23 · 6.8K R74 · MPS6515 Q24 · 3pf C7 · 12K R72 · .001 C6 · 1K R75 · MPS6515 Q25

220Ω R77 · 27K R78 · 1K R79 · MPS6515 Q27 · 2N4248 Q22 · 4.3K R83 · 6.2V CR37 · 2N4248 Q28 · CR38 · CR39 · 2N4248 Q29 · 33K R76 · 220Ω R84

2N5555 Q37 · MPS6515 Q30 · .001 C9 · 100Ω R82 · 750Ω R80 · 47Ω R81 · 2N2907 Q33 · C8 5pf

351 OUTPUT J3-P · 331 GND

CR41 · CR42 · 27Ω R85 · CR40 · 2N4248 Q31 · 2N2222 Q32 · 43K R86 · .05μf C10 · 27K R87 · 510Ω R88

+15V

5.6K R89 · 3.3K R90 · CR46 · CR43 · MPS6519 Q34 · 3.3K R92 · 1K R91 · 390Ω R97 · 10K R95 · 2N3646 Q35 · 5.6K R96 · C12 56pf · 2N3646 Q36 · CR44 · 3.3K R94 · CR45 · 5pf C13 · 56pf C14 · C11 SEE NOTE 5

-15V

P99 3K ¼W · CR47 FD6666

105 (2293)

7 HOLD (218-14)

+15V 2 · GRD 5,49,76,32 · -15V 3

6.8μf 35V C1 · 6.8μf 35V C2

L2K R54 · 180Ω 1W R56 · MPS 6515 Q19 · 220Ω R55 · +15V

3.3K R57 · 270Ω ½W R59 · MPS 6519 Q20 · 1K R58 · -27V

NOTES:

7. DO NOT INSTALL Q37 UNTIL FINAL TEST.
6. RESISTORS RT1 – RT6 ARE CARBON COMP, ⅛ W 5% WITH VALUES WHICH ARE DETERMINE AT FINAL ELECTRICAL TEST. ALSO TO RT 7
5. CAPACITOR VALUE TO BE ADJUSTED FOR MINIMUM PEDESTAL PER THE TEST PROCEDURE.
4. ALL RESISTORS ARE ⅛ W CARBON COMP, UNLESS OTHERWISE SPECIFIED.
3. A1, A2, A3 ARE RCA CA3046 TRANSISTOR ARRAYS.
2. ALL DIODES ARE DA1702, UNLESS OTHERWISE SPECIFIED.
1. Q1 – Q13, & Q22 ARE 2N5055.

© by IMLAC CORP. 1970, 1971, 1972

© 1971

	BY	DATE
LAYOUT	H.C.M.	18 Feb 71
DRAWN	H.C.M.	22 Feb 71
CHECKED	C.R.A.	22 Mar 71
APPROVED		
ISSUE		
COPIED		
MATERIAL		

IMLAC CORPORATION
296 NEWTON STREET
WALTHAM, MASSACHUSETTS 02154

PROJECT

TITLE: D TO A CONVERTER Y AXIS

PREFIX	SIZE	DRAWING NUMBER	REV.
		852	E

Scale · Sheet

REV	ECN	DATE	DFTMN	APR'V

320
- 64 LINK L (232-17)
- 75 ACL0 (219-19)
- 73 ACL1 (219-17)
- 65 ACL2 (219-15)
- 68 ACL3 (219-40)

308
- 60 ACL4 (220-19)
- 74 ACL5 (220-17)
- 66 ACL6 (220-15)
- 11 ACL7 (220-40)
- 4 ACL8 (221-19)
- 51 ACL9 (221-17)
- 40 ACL10 (221-15)
- 15 ACL11 (221-40)
- 16 ACL12 (222-19)
- 29 ACL13 (222-17)
- 36 ACL14 (222-15)
- 35 ACL15 (222-40)

320
- 71 MBL0 (212-21)
- 62 MBL1 (212-23)
- 72 MBL2 (212-26)
- 67 MBL3 (212-28)

308
- 73 MBL4 (212-61)
- 58 MBL5 (212-66)
- 68 MBL6 (212-62)
- 46 MBL7 (212-68)
- 55 MBL8 (213-21)
- 6 MBL9 (213-23)
- 19 MBL10 (213-26)
- 42 MBL11 (213-28)
- 41 MBL12 (213-61)
- 18 MBL13 (213-66)
- 23 MBL14 (213-62)
- 20 MBL15 (213-68)

320
- 60 MAL1 (208-21) △ GRD (320-74) *
- 70 MAL2 (208-23) △ GRD (320-76) *
- 66 MAL3 (208-26)

308
- 75 MAL4 (208-28)
- 63 MAL5 (208-66)
- 13 MAL6 (208-62)
- 48 MAL7 (208-68)
- 53 MAL8 (209-21)
- 8 MAL9 (209-23)
- 17 MAL10 (209-26)
- 44 MAL11 (209-28)
- 39 MAL12 (209-61)
- 28 MAL13 (209-66)
- 37 MAL14 (209-62)
- 22 MAL15 (209-68)

320
- 63 PCL1 GRD (321-76)

308
- 64 PCL2 (205-23) △ GRD (308-76) *
- 62 PCL3 (205-26)
- 65 PCL4 (205-28)
- 67 PCL5 (205-66)
- 50 PCL6 (205-62)
- 52 PCL7 (205-68)
- 10 PCL8 (206-21)
- 38 PCL9 (206-23)
- 12 PCL10 (206-26)
- 14 PCL11 (206-28)
- 30 PCL12 (206-61)
- 34 PCL13 (206-66)
- 24 PCL14 (206-62)
- 26 PCL15 (206-68)

320
- 58 LAMP GRD (320-76)

320
- 74 DPCL1 GRD (321-76)

308
- 69 DPCL2 (203-24) △ GRD (308-76) *
- 71 DPCL3 (203-28)
- 76 DPCL4 (203-61)
- 70 DPCL5 (203-66)
- 9 DPCL6 (203-62)
- 7 DPCL7 (203-68)
- 47 DPCL8 (204-21)
- 21 DPCL9 (204-23)
- 45 DPCL10 (204-26)
- 43 DPCL11 (204-28)
- 27 DPCL12 (204-61)
- 25 DPCL13 (204-66)
- 33 DPCL14 (204-62)
- 31 DPCL15 (204-68)

320
- 69 IAL0 (226-23)
- 78 IAL1 (226-37)

308
- 78 IAL2 (226-35)
- 61 IAL3 (226-33)
- 56 IAL4 (226-29)
- 77 SPECIAL L (214-55)
- 59 DEFER L (232-61)
- 79 EXEC L (232-43)

320
- 56 ACTIVE L (202-6)
- 61 FETCH L (232-63)
- 77 RUN L (226-27)
- 58 VECTOR L (202-10)
- 79 MPL (320-76)
- 3 MEM. PROT. NC-2
- 2 MEM. PROT. C-2
- 55 SINGLE INSTR. NC — (231-16)
- 52 SINGLE INSTR. C — (231-15)
- 7 SINGLE CYCLE NC — (231-18)
- 4 STOP NC — (231-17)

308
- 80 MEM. PROT. NC 1
- 54 MEM. PROT. C1
- 57 MEM. PROT. No. 1

320
- 38 DS0 (219-78)
- 40 DS1 (219-80)
- 42 DS2 (219-53)
- 44 DS3 (219-51)
- 12 DS4 (220-78)
- 14 DS5 (220-80)
- 16 DS6 (220-53)
- 18 DS7 (220-51)
- 28 DS8 (221-78)
- 30 DS9 (221-80)
- 34 DS10 (221-53)
- 36 DS11 (221-51)
- 20 DS12 (222-78)
- 22 DS13 (222-80)
- 24 DS14 (222-53)
- 26 DS15 (222-51)
- 19 AS1 (205-29) △
- 17 AS2 (205-33) △
- 15 AS3 (205-39)
- 45 AS4 (205-17)
- 43 AS5 (205-73)
- 41 AS6 (205-79)
- 39 AS7 (205-57)
- 29 AS8 (206-29)
- 27 AS9 (206-33)
- 25 AS10 (206-39)
- 23 AS11 (206-17)
- 37 AS12 (206-69)
- 35 AS13 (206-73)
- 33 AS14 (206-79)
- 31 AS15 (206-57)
- 21 SWITCH GRD (320-32)

320
- 57 +5V (320-1)
- 54 GRD (320-99)
- 53 START — (231-64)
- 50 GRD — (231-63)
- 6 CONTINUE — (231-68)
- 9 GRD — (231-67)
- 51 READ — (231-66)
- 48 GRD — (231-65)
- 8 READ NEXT — (231-58)
- 11 GRD — (231-57)
- 47 STORE — (231-54)
- 46 GRD — (231-53)
- 10 STORE NEXT — (231-56)
- 13 GRD — (231-55)

I/O PANEL
- 3 GRD
- 79 GRD
- 2
- 40 NC
- C
- S2 START AT
- NO
- 100 NC
- C
- S3
- NO START
- 80 CNSL INH (231-35)
- S3-NC (232-18)
- S3-C (232-5)
- S3-NO (232-16)

△ FOR 16K ONLY

NOTE: * FOR 8K ONLY

© by IMLAC CORP. 1970, 1971, 1972

© 1971

	By	DATE
LAYOUT	H.C.M.	3/MAR/71
DRAWN	H.C.M.	1/APR/71
CHECKED	C.B.A.	4-7-71
APPROVED		
ISSUE		
COPIED		

MATERIAL

IMLAC CORPORATION

PROJECT: PROD

TITLE: CABLE CARD CONNECTION 308 & 320

PREFIX	SIZE	DRAWING NUMBER	REV.
L	D	855-A	

Scale | Sheet

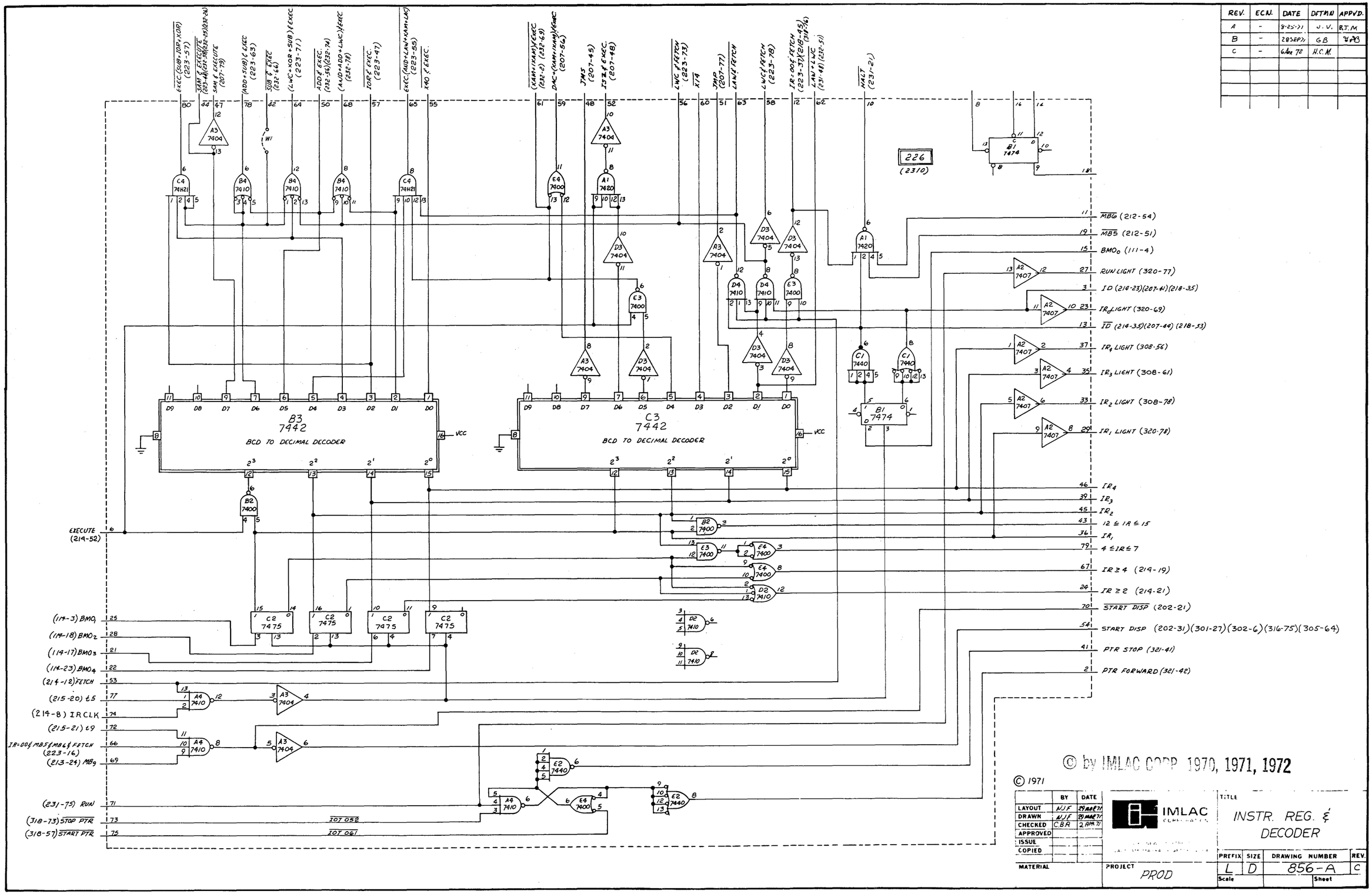

REV.	ECN.	DATE	DFTMN	APPVD.
A	-	8-25-71	J.V.	R.T.M
B	-	28SEP71	GB	[illegible]
C	-	6Apr 72	H.C.M.	

© by IMLAC CORP 1970, 1971, 1972

© 1971

	BY	DATE
LAYOUT	NJF	29 MAR 71
DRAWN	NJF	29 MAR 71
CHECKED	C.B.R	2 APR 71
APPROVED		
ISSUE		
COPIED		

MATERIAL

IMLAC CORPORATION

PROJECT PROD

TITLE INSTR. REG. & DECODER

PREFIX	SIZE	DRAWING NUMBER	REV.
L	D	856-A	C

Scale

Sheet

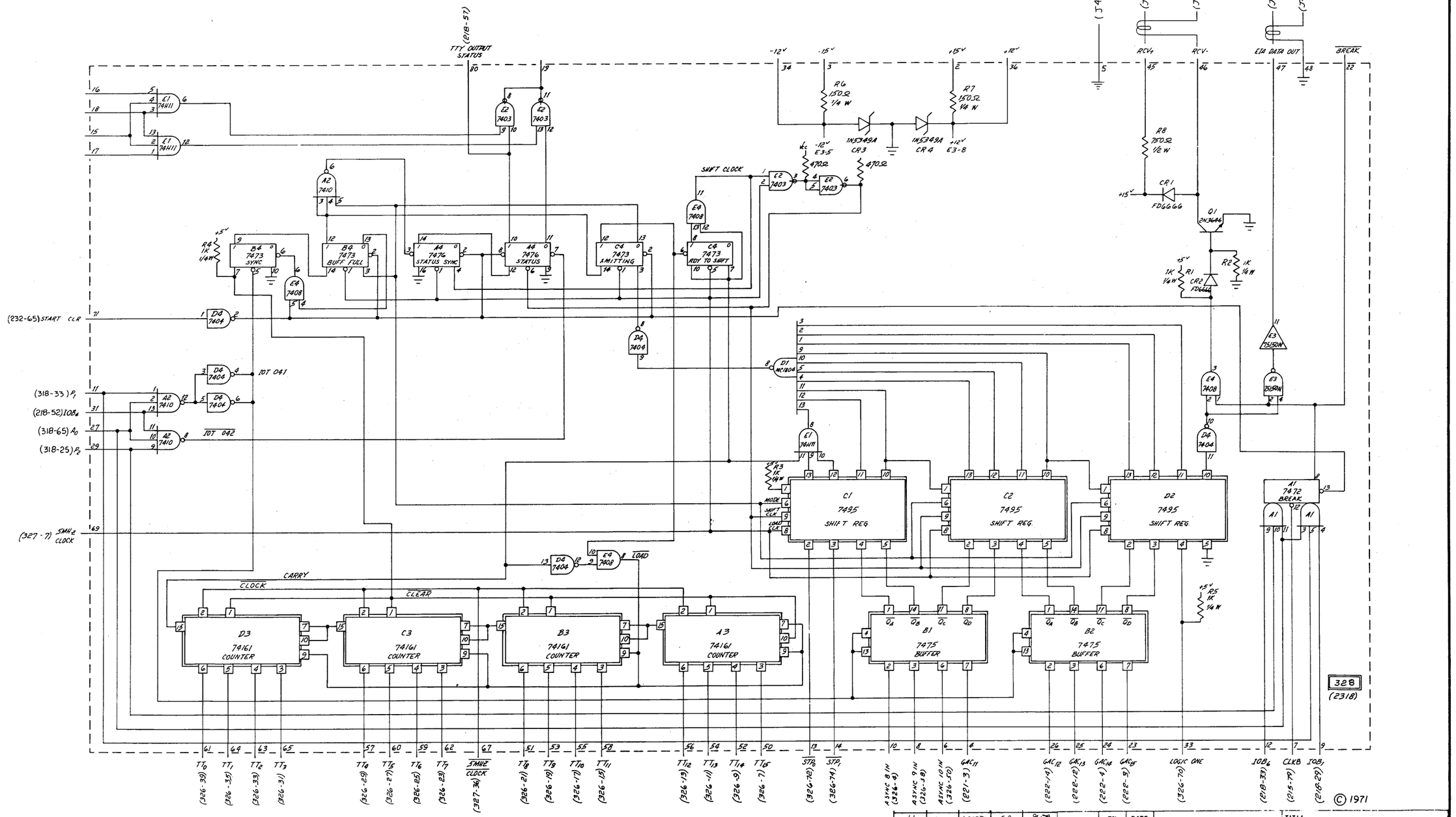

© 1971

© by IMLAC CORP. 1970, 1971, 1972

REV	ECN	DATE	DFTMN	APPVD.
H	---	1 OCT 71	GB	[illegible]
G	---	28 SEP 71	GB	[illegible]
F	---	7 SEP 71	J.V.	
E	-	3 SEP 71	H.C.M.	
D	-	7 JUN 71	H.C.M.	
-	-	-		D.F.
C	-	[illegible]	[illegible]	
B	-	[illegible]	[illegible]	
A	-	[illegible]	[illegible]	

	BY	DATE
LAYOUT	H.C.M.	14 APR 71
DRAWN	H.C.M.	21 APR 71
CHECKED	[illegible]	21 APR 71
APPROVED		
ISSUE		
COPIED		
MATERIAL		

IMLAC CORPORATION
[illegible] WILSON STREET
[illegible] MASSACHUSETTS

PROJECT
PROD

TITLE
ASYNCHRONOUS SERIAL TRANSMITTER

PREFIX	SIZE	DRAWING NUMBER	REV.
L	D	869	H

Scale | Sheet

REV	ECN	DATE	DFTMN	APR'V
D	-	7 Jun 71	H.C.M.	D.&F.
E	459	16 Jul 71	H.C.M.	[illegible]
F	-	3 Sep 71	H.C.M.	
G	---	10-27-71	J.V.	[illegible]
H	-	28 Oct 71	H.C.M.	
		[illegible]	[illegible]	[illegible]
J	-	13 Mar 72	H.C.M.	

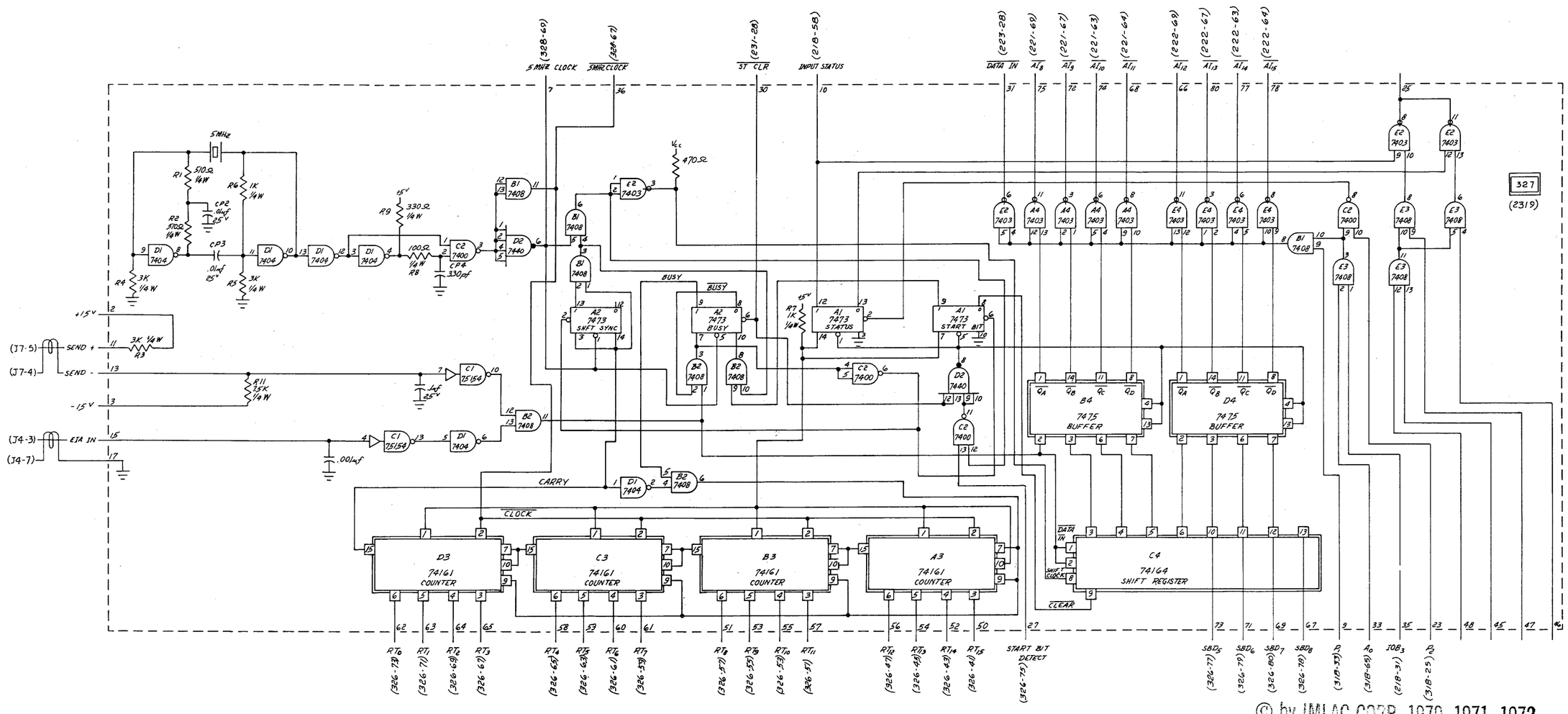

© by IMLAC CORP. 1970, 1971, 1972

© 1971

	BY	DATE
LAYOUT	H.C.M.	3 May 71
DRAWN	H.C.M.	5 May 71
CHECKED	[illegible]	10 May 71
APPROVED		
ISSUE		
COPIED		
MATERIAL		

IMLAC CORPORATION
WALTHAM MASSACHUSETTS 02154

PROJECT PROD

TITLE ASYNCHRONOUS SERIAL RECEIVE

PREFIX	SIZE	DRAWING NUMBER	REV.
		870	J

Scale Sheet

REV	ECN	DATE	DFTMN	APPVD

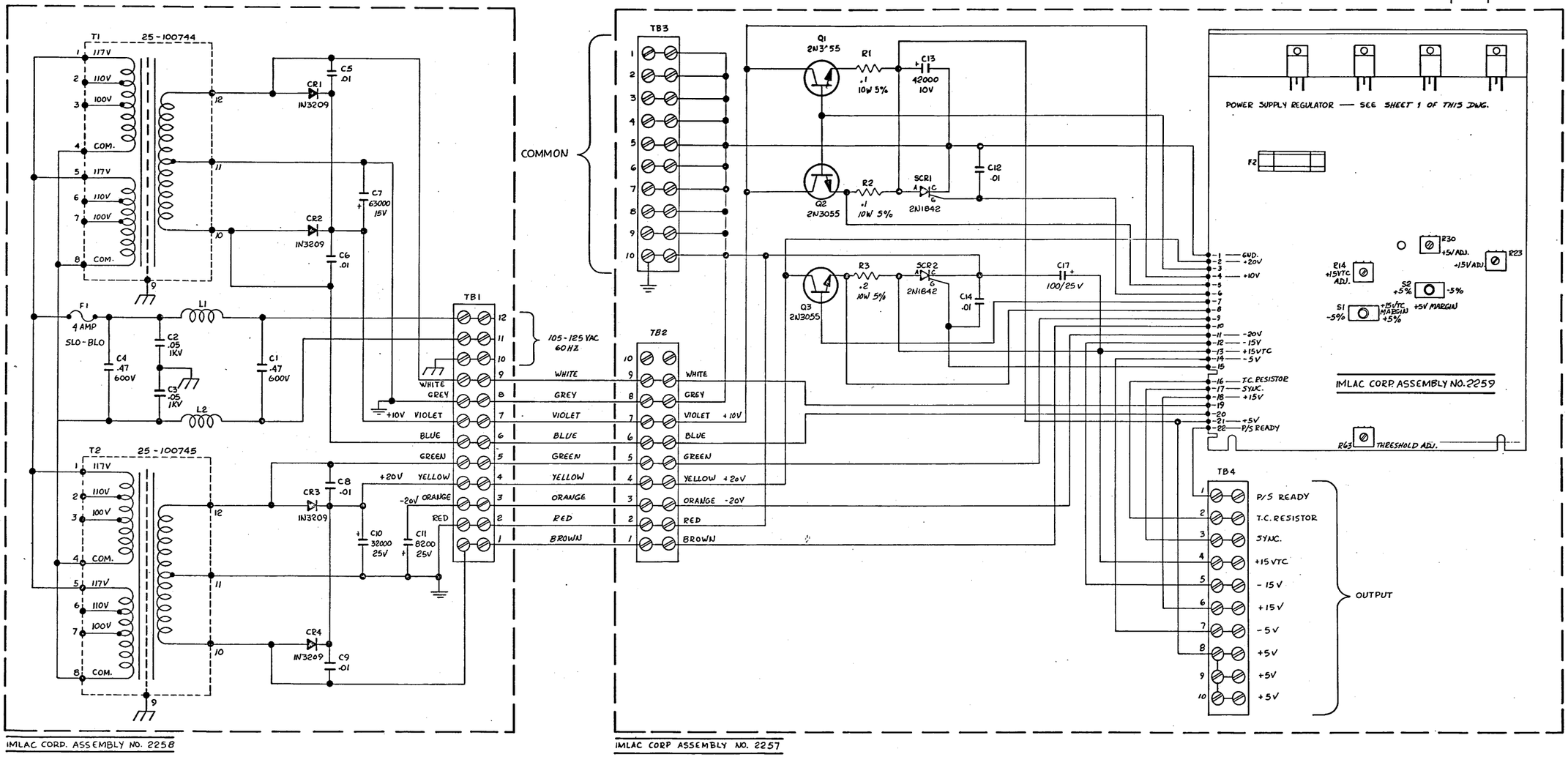

IMLAC CORP. ASSEMBLY NO. 2258

IMLAC CORP ASSEMBLY NO. 2257

RESISTANCE IN OHMS
CAPACITANCE IN MFDS

SYMBOLS USED

F1 - F1	TB1 - TB4	CR1 - CR4
T1 - T2	Q1 - Q3	C1 - C14, C17
L1 - L2	SCR1 - SCR2	R1 - R3

© by IMLAC CORP. 1970, 1971, 1972

	BY	DATE
LAYOUT	NJF	23SEP71
DRAWN	NJF	23SEP71
CHECKED		
APPROVED		
ISSUE		
COPIED		
MATERIAL		

IMLAC CORPORATION
206 NEWTON STREET
WALTHAM, MASSACHUSETTS 02154

PROJECT

TITLE: POWER SUPPLY LOGIC

PREFIX	SIZE	DRAWING NUMBER	REV.
L	D	871	

Scale

Sheet 2 of 2

REV.	ECN.	DATE	DFTMN	APP'VD.
A	-	15Dec71	H.C.M.	
B	-	15Dec71	H.C.M.	
C	-	16March72	H.C.M.	

UNLESS OTHERWISE SPECIFIED:
RESISTANCE IN OHMS
CAPACITANCE IN MFDS.
RESISTORS 1/2W ± 5%

SYMBOLS USED

IC1 - IC6	SCR 3 -
Q4 - Q18	CR5 - CR18
S1 - S2	C15, C16, C18 - C28
F2	R4 - R68

SCHEMATIC IC 1 2 & 3

IC 1, 2 & 3 TOP VIEW

IC 4, 5 & 6 TOP VIEW

© by IMLAC CORP. 1970, 1971, 1972

	BY	DATE
LAYOUT	NJF	22Sept71
DRAWN	NJF	22Sept71
CHECKED		
APPROVED		
ISSUE		
COPIED		
MATERIAL		

IMLAC CORPORATION
296 NEWTON STREET
WALTHAM, MASSACHUSETTS 02154

PROJECT

TITLE
POWER SUPPLY LOGIC

PREFIX	SIZE	DRAWING NUMBER	REV.
L	D	871	C

Scale

Sheet 1/2

REV.	ECN.	DATE	DFTMN.	APPVD.
A	-	7 JUN 71	H.C.M.	
B	---	8-2-71	J.V.	
C	-	8 FEB 72	H.C.M.	
D	-	5 APR 72	H.C.M.	

ACC CNTL CLK (223-4)
EXEC L (308-79)
FETCH L (380-61)
DEFER L (308-59)
LINK L (320-64)
LOCATED ON IO PANEL
LIGHT EMITTING DIODE
120 OHMS 1/4 W.
+5 V
PC CLK (206-41)(205-41)
EXT ST CLR (319-52)
ST CLR (NOT USED)
DATA OUT (219-44)(220-44) (221-44)(222-44)
GMBO (220-71)
GMB4 (220-74)
GATED DIS READY (231-34)(202-80)
COMP LINK A (218-2)
232
2317
54
FOR USE SEE CARD #223

(318-27) IOT DO XXX
(215-58) EARLY CLOCK
(226-51) S3
(318-35) IOT 101 READ STATUS
(318-60) READ SYNC PULSE-TTY DONE FLAG
(318-56) READ PROG CLR IOT 131
(223-28) DATA IN
(318-62) READ KYBD IOT 1301
(214-47) EXEC
(214-10) FETCH
(214-31) DEFER
(218-3) LINK
(219-12) GMCI
(231-24) PC MUX CLR
(231-75) RUN
(215-61) RUN CLOCK
(221-28) START CLR
(319-25) DATA OUT
(NOT USED) INT DATA OUT
(212-63) MB0
(226-62) LINT-LMC
(212-55) MB4
TP3-1 DIS RDY
TP4-1 GND
(53-NC) S3-NC
(53-C) GND
(53-40) S3-40
(207-40) SUBT=0
(207-46) MB CARRY OUT-STEP 4 & 6
FORCE COMPL LINK
(226-48) SUBT EXEC
SUBT EXEC
(215-10) 96
(226-50) ADDT EXEC
ADDT EXEC
C OUT
(219-26) C OUT
(223-48) IAC & 6010

© by IMLAC CORP. 1970, 1971, 1972

© 1971

	BY	DATE
LAYOUT	WJF	18MAY71
DRAWN	WJF	18MAY71
CHECKED	GB	25JUN71
APPROVED		
ISSUE		
COPIES		
MATERIAL		

IMLAC

TITLE: MISC. CONTROL

PROJECT: PROD

PREFIX	SIZE	DRAWING NUMBER	REV.
L	D	872	D

Scale | Sheet

REV	ECN	DATE	DFTM	APP'D
A	---	6-3-71	J.V.	[illegible]
B	443	30 JUN 71	G.B	[illegible]
C	–	8 MAY 72	R.T.M.	[illegible]

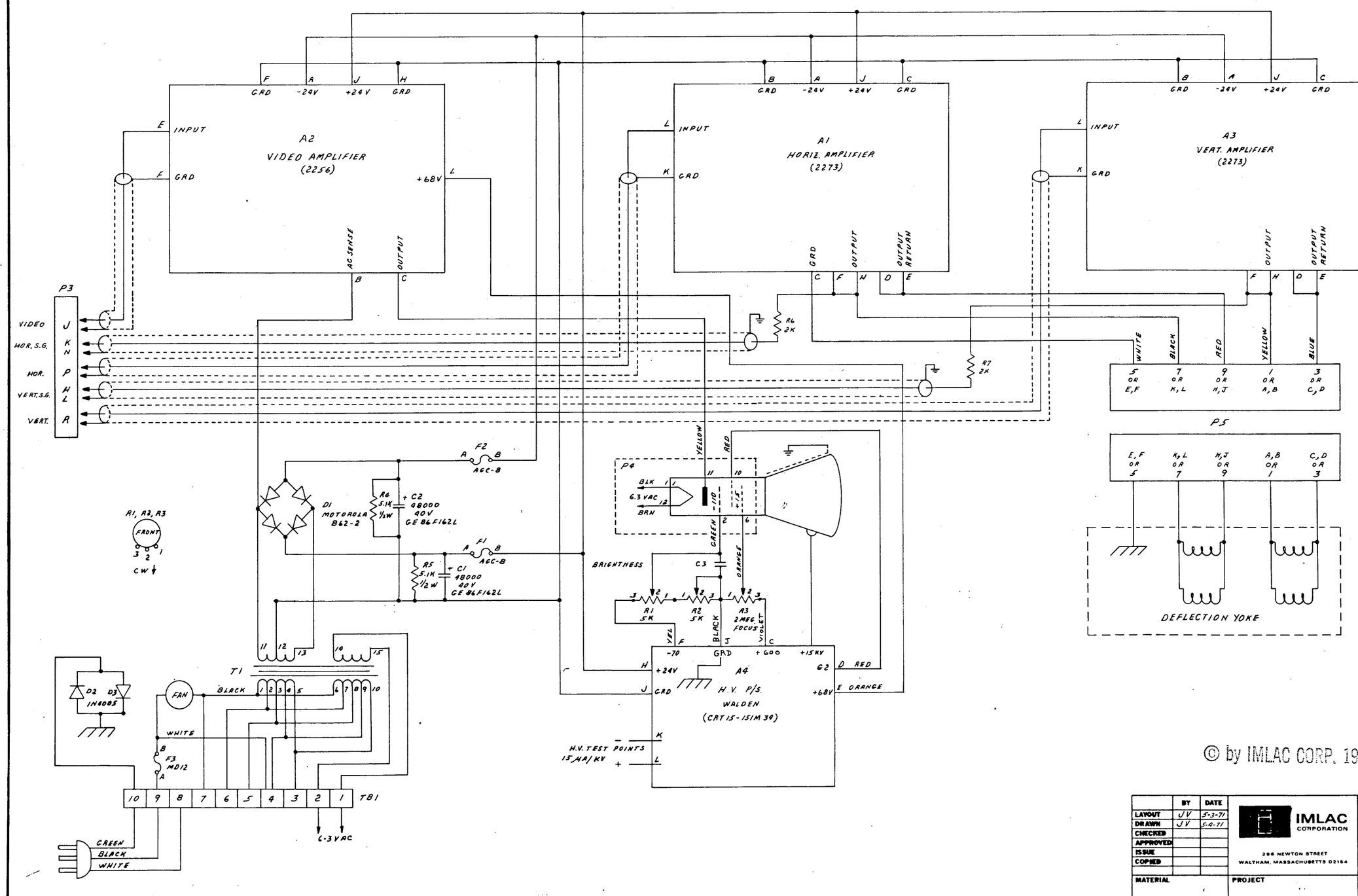

© by IMLAC CORP. 1970, 1971, 1972

	BY	DATE
LAYOUT	JV	5-3-71
DRAWN	JV	5-4-71
CHECKED		
APPROVED		
ISSUE		
COPIED		
MATERIAL		

IMLAC CORPORATION
298 NEWTON STREET
WALTHAM, MASSACHUSETTS 02154

PROJECT

TITLE: MONITOR

PREFIX	SIZE	DRAWING NUMBER	REV.
L	D	881	C

Scale | Sheet

	COMMON TO ALL CYCLES			DISPLAY BREAK	00 D OPR	01 D LXA N	02 D LYA N	03 D EIM	
1	LOAD MA (820)			C(DPC) ⇒ C(MA) (838)					1
2									2
3	READ (849)			C(DPC) +1 ⇒ C(DPC) (838)					3
4									4
5	C(BMO) ⇒ C(MB) LOAD MB (842)			C(BMO) ⇒ C(DMB) C(BMO_{0-3}) ⇒ C(DIR) (838)					5
6				IF $\overline{INC}$ SL-8 HERE EQUIVALENT TO C(DMB) ⇒ C(IC) (838)					6
7									7
8	INHIBIT WRITE (849)				IF IC_{10} = 1 C(DT) ⇒ C(DPC) LOAD DPC CLEAR IN DISPLAY IF IC_4 = 0 (798) IF $IC_{12,13}$ = 0,1 SET SCALE PER IC_{14-15} (838)				8
9						C(IC) ⇒ C(XAC) (838)	C(IC) ⇒ C(YAC) (838)		9
10				IF ($\overline{INC}$) & (IN DISPLAY) SET DISPLAY BREAK (798)				SET INC SL-8 (798) SET STATE 0	10

	04	05 D JMS Q O	06 D JMP Q	07	INC & IC_0	INC & $\overline{IC_0}$		
1								1
2					IF IC_3 +1 TO XAC (838) IF IC_6 +1 TO YAC	IF IC_4 0 ⇒ C(XAC)$_{LSB}$ IF IC_3 +1 TO XAC$_{MSB}$ (838) IF IC_7 0 ⇒ C(YAC)$_{LSB}$ IF IC_6 +1 TO YAC$_{MSB}$		2
3					IF IC_0 & IC_1 = BEAM ON ALL ELSE = BEAM OFF (798)			3
4								4
5					IF IC_4 +1 TO XAC (838) IF IC_7 +1 TO YAC			5
6		C(DPC) ⇒ C(DT) (838)						6
7								7
8					IF IC_3 +1 TO XAC (838) IF IC_6 +1 TO YAC			8
9								9
10		C(IC_{4-15}) ⇒ C(DPC) (838)	C(IC_{4-15}) ⇒ C(DPC) (838)		IF STATE 0 GO TO STATE 1 (798) IF STATE 1 GO TO STATE 0 & SET DISP BRK SL-8 (838)	IF IC_1 SET DISP BRK & CLEAR INC. (798) IF IC_2 C(DT) ⇒ C(DPC) (838) SL-8		10

NOTE: THE NUMBERS IN PARENTHESES BESIDE A SIGNAL, e.g. (842), INDICATES LOGIC DWG ON WHICH SIGNAL ORIGINATES.

© by IMLAC CORP. 1970, 1971, 1972

	BY	DATE
LAYOUT	NJF	14 SEP 71
DRAWN	NJF	14 SEP 71
CHECKED		
APPROVED		
ISSUE		
COPIED		
MATERIAL		

IMLAC CORPORATION
296 NEWTON STREET
WALTHAM, MASSACHUSETTS 02154

PROJECT

TITLE
TIMING DIAGRAM
DISPLAY CYCLES

PREFIX	SIZE	DRAWING NUMBER	REV.
L	D	890	

Scale

Sheet 4 of 4

COMMON TO ALL EXECUTE

1	(842)	IF ID IF JD	C(PC$_{1-4}$) ⇒ C(MA$_{1-4}$) C(B$_{1-4}$) ⇒ C(MA$_{1-4}$) C(B$_{5-15}$) ⇒ C(MA$_{5-15}$)			
2						
3						
4						
5						
6	(842)	C(MB) ⇒ C(B)				
7						
8						
9						
10						

20$_8$ DAC (4)

1						
2						
3						
4						
5						
6	(842)	C(GAC) ⇒ LOAD C(MB)				(842)
7						
8						
9						
10						

24$_8$ XAM (5)

	S_0	S_1	S_2	S_3	M	$\overline{C}_{IN}$	C(ALU) ⇒ C(AC)	
1								
2								
3								
4								
5								
6	0	1	0	1	1		1	(840)
			C(GAC)	LOAD ⇒ C(MB)	MB			(842)
7								
8								
9								
10								

30$_8$ ISZ (6)

1								
2								
3								
4								
5								
6		C(MB) + 1 ⇒ C(MB)						(842)
	IF MB = 0	C(PC+1) ⇒ C(PC)	&	C($\overline{L}$)		⇒ C(L)		(872)
7								
8								
9								
10								

34$_8$ JMS (7)

1						
2						
3						
4						
5						
6		C(PC) ⇒ C(MB)				(842)
		LOAD MB				
7						
8						
9		LOAD PC				
		C(MB) ⇒ C(PC)				(842)
10		C(PC+1) ⇒ C(PC)				(842)

44$_8$ AND (9)

	S_0	S_1	S_2	S_3	M	$\overline{C}_{IN}$	C(ALU) ⇒ C(AC)	
1								
2								
3								
4								
5								
6	1	1	0	1	1		1	(840)
7								
8								
9								
10								

50$_8$ IOR (10)

	S_0	S_1	S_2	S_3	M	$\overline{C}_{IN}$	C(ALU) ⇒ C(AC)	
1								
2								
3								
4								
5								
6	0	1	1	1	1			(840)
7								
8								
9								
10								

54$_8$ XOR (11)

	S_0	S_1	S_2	S_3	M	C_{IN}	C(ALU) ⇒ C(AC)	
1								
2								
3								
4								
5								
6	0	1	1	0	1		1	(840)
7								
8								
9								
10								

60$_8$ LAC (12)

	S_0	S_1	S_2	S_3	M	C_{IN}	C(ALU) ⇒ C(AC)	
1								
2								
3								
4								
5								
6	0	1	0	1	1	(840)	1	
							(872)	
7								
8								
9								
10								

64$_8$ ADD (13)

	S_0	S_1	S_2	S_3	M	$\overline{C}_{IN}$	C(AC) ⇒ C(AC)	
1								
2								
3								
4								
5								
6	1	0	0	1	0	1	1	(840)
	IF	OVERFLOW,				C($\overline{L}$)	⇒ C(L)	(872)
7								
8								
9								
10								

70$_8$ SUB (14)

	S_0	S_1	S_2	S_3	M	$\overline{C}_{IN}$	C(ALU) ⇒ C(AC)	
1								
2								
3								
4								
5								
6	0	1	1	0	0	0	1	(840)
	IF	OVERFLOW,				C($\overline{L}$)	⇒ C(L)	(872)
7								
8								
9								
10								

74$_8$ SAM (15)

	S_0	S_1	S_2	S_3	M	$\overline{C}_{IN}$	C(ALU) ⇒ C(AC)	
1								
2								
3								
4								
5								
6	1	0	IF C(AC) = C(MB)		1	0	0	(840)
			C(PC+1) ⇒ C(PC)					(842)
7								
8								
9								
10								

NOTE: THE NUMBERS IN PARENTHESES BESIDE A SIGNAL e.g. (842) INDICATES LOGIC DWG ON WHICH SIGNAL ORIGINATES.

© by IMLAC CORP. 1971, 1971, 1972

THIS DWG FORMERLY #891

	BY	DATE
LAYOUT	WJF	1/25/71
DRAWN	WJF	3/30/71
CHECKED		
APPROVED		
ISSUE		
COPIED		
MATERIAL		

IMLAC CORPORATION
288 NEWTON STREET
WALTHAM, MASSACHUSETTS 02154

PROJECT

TITLE: TIMING DIAGRAM EXECUTE CYCLES

PREFIX	SIZE	DRAWING NUMBER	REV.
L	D	890	

Scale | Sheet 3 of 4

	COMMON TO ALL FETCH	00 OPR	04 LAW (1)	JMP (2)	OPERATE 000 BIT 5=0 BIT 6=0	IOT 001 BIT 5=0 BIT 6=1	SKIP 002 BIT 5=1 BIT 6=0	SHIFT, ROTATE, DISPLAY ON 003 BIT 5=1 BIT 6=1 SHIFT IF BIT 10=1 ROTATE IF BIT 10=0
			S_0 S_1 S_2 S_3 M $\bar{C}_{IN}$ C(ALU)→C(AC) C(MB)→C(ALU)			S_0 S_1 S_2 S_3 M $\bar{C}_{IN}$ C(ALU)→C(AC) C(MB)→C(ALU)	S_0 S_1 S_2 S_3 M $\bar{C}_{IN}$ C(ALU)→C(AC) C(MB)→C(ALU)	S_0 S_1 S_2 S_3 M $\bar{C}_{IN}$ C(ALU)→C(AC) C(MB)→C(ALU)
1	(842) C(PC 5-15) ⇒ C(MA 5-15) C(PC 1-4) ⇒ C(MA 1-4)							
2	(842) C(PC +1) ⇒ C(PC)							
3								
4								
5	(856) C(BMO 1-4) ⇒ C(IR) OCCURS EARLY IN T5 C(BMO 0) ⇒ C(ID)							
6	(842) C(MB) ⇒ C(B)		C(AC 0-4)=0 0 1 HERE 1 C(MB)→C(AC) (872) IF ID 1 0 1 0 HERE 1 C($\overline{MB}$)→C(AC) (848) (840)			MB_{14} = IOT P1 (847)		
7			IF ID 1 0 0 1 HERE 0 C(AC) +1 ⇒ C(AC) 0 1 (840)					
8						MB_{13} = IOT P3 (847)		MOVE AC RIGHT IF MB 14 0 0 1 HERE 1 MOVE 0 AC LEFT 1 (840) 1 0
9								MB_9 = DISP. ON MOVE AC RIGHT IF MB 14 0 0 1 HERE 1 MOVE 0 AC LEFT 1 (856) (840) 1 0
10	(772) IF (IR ≥ 2) & ID SET DEFER IF (IR ≥ 4) & $\overline{ID}$ SET EXECUTE OTHERWISE SET FETCH			(842) C(MB 5-15) ⇒ C(PC 5-15) LOAD PC 5-15		MB_{15} = IOT P2 (847)	(845) (842) IF SKIP COND. C(PC)+1 ⇒ C(PC)	MOVE AC RIGHT IF MB 15 0 0 1 HERE 1 MOVE 0 AC LEFT 1 (840) 1 0

	COMMON TO ALL DEFER	INDIRECT JMP (2)
1	(842) C(PC 1-4) ⇒ C(MA 1-4) C(B 5-15) ⇒ C(MA 5-15)	
2		
3		
4		
5		
6	(842) IF IT ≥ MA ≥ 10, C(MB +1) ⇒ C(MB)	
7	(842) C(MB) ⇒ C(B)	
8		
9		
10	(772) IF IR ≥ 4 SET EXECUTE OTHERWISE SET FETCH	(842) C(MB 5-15) ⇒ C(PC 5-15) C(MB 1-4) ⇒ C(PC 1-4)

NOTE: THE NUMBERS IN PARENTHESES BESIDE A SIGNAL, e.g. (842), INDICATES THE LOGIC DWG ON WHICH THE SIGNAL ORIGINATES.

© by IMLAC CORP. 1970, 1971, 1972

THIS DWG FORMERLY # 892

	BY	DATE
LAYOUT	NJF	13 SEP 71
DRAWN	NJF	13 SEP 71
CHECKED		
APPROVED		
ISSUE		
COPIED		
MATERIAL		

IMLAC CORPORATION
296 NEWTON STREET
WALTHAM, MASSACHUSETTS 02154

PROJECT

TITLE
TIMING DIAGRAM FETCH & DEFER CYCLES

PREFIX	SIZE	DRAWING NUMBER	REV.
L	D	890	1

Scale

Sheet 1 of 4

	HLT OPERATE AND MB0=0 XXX	NOP MB0=1 000	CLA MB0=1 MB15=1 001	CMA MB0=1 MB14=1 002	IAC MB0=1 MB13=1 004	CLL MB0=1 MB12=1 010	CML MB0=1 MB11=1 020	ODA MB0=1 MB10=1 040
			S_0 S_1 S_2 S_3 M $\overline{C_{IN}}$ C(ALU)⇒C(AC) C(MB)⇒C(ALU)	S_0 S_1 S_2 S_3 M C_{IN} C(ALU)+C(AC) C(MB)⇒C(ALU)	S_0 S_1 S_2 S_3 M $\overline{C_{IN}}$ C(ALU)+C(AC) C(MB)⇒C(ALU)			S_0 S_1 S_2 S_3 M $\overline{C_{IN}}$ C(ALU)XC(MB)⇒C(AC); C(ALU)⇒C(ALU)
1								
2								
3								
4								
5								
6			0 1 0 1 1 1 (840)			(840) 0⇒C(LINK)		
7								
8				0 0 0 0 1 1 (840)			(840) C($\overline{\text{LINK}}$)⇒C(LINK)	
9								
10	(848) RUN=0				1 0 0 1 0 0 1 (840) IF C(AC)=0 C(LINK)⇒C(LINK) (872)			0 1 1 1 1 1 (840) C(DS)⇒C(AC)

	COMMON TO ALL CYCLES	INTERRUPT	HIGH LEVEL INTERRUPT	DMA WRITE	CONSOLE STORE	CONSOLE READ		DMA READ
1	LOAD MA (820)	0⇒C(MA)	2⇒C(MA)	DISCONNECT B REGISTER C(B)⇒C(MA) [HERE DMA ADDRESS⇒C(MA)]	(842) C(PC)⇒C(MA) PC HAS PREVIOUSLY BEEN LOADED WITH C(AS)	(842) C(PC)⇒C(MA) PC HAS PREVIOUSLY BEEN LOADED WITH C(AS)		DISCONNECT B REGISTER C(B)⇒C(MA) [WHERE DMA ADDRESS⇒C(MA)]
2					(842) C(PC+1)⇒C(PC)	(842) C(PC+1)⇒C(PC)		
3	READ (849)							
4					0 1 0 1 1 1 C(PS)⇒C(ALU) (840)			
5	C(BMO)⇒C(MB) LOAD MB (842)							
6		(842) C(PC)⇒C(MB) LOAD MB	(842) C(PC)⇒C(MB) LOAD MB	C(BUS)⇒C(MB) LOAD MB [HERE DMA WORD⇒C(MB)]	(842) C(GAC)⇒C(MB) LOAD MB			
7								
8	INHIBIT WRITE (849)	(842) LOAD PC C(MA)⇒C(PC)	(842) LOAD PC C(MA)⇒C(PC)					
9								
10		(842) C(PC+1)⇒C(PC)	(842) C(PC+1)⇒C(PC)		(772) CLEAR CONSOLE STORE	CLEAR CONSOLE READ		

NOTE: THE NUMBERS IN PARENTHESES BESIDE A SIGNAL, e.g (842), INDICATES LOGIC DWG ON WHICH SIGNAL ORIGINATES

© by IMLAC CORP. 1970, 1971, 1972

	BY	DATE
LAYOUT	NJF	MSEP71
DRAWN	NJF	MSEP71
CHECKED		
APPROVED		
ISSUE		
COPIED		
MATERIAL		

IMLAC CORPORATION
288 NEWTON STREET
WALTHAM, MASSACHUSETTS 02154

PROJECT

TITLE: TIMING DIAGRAM FETCH & SPECIAL CYCLES

PREFIX	SIZE	DRAWING NUMBER	REV.
L	D	890	

Scale

REV	ECN	DATE	DFTMN	APPV
A		5 24 71	J.V.	R.T.M.

READ C (119-11)(120-11)
WRITE C (119-9)(120-9)
INHIBIT C (118-8)
STROBE C (115-52)
GRD (115-51)
READ D (107-11)(108-11)
WRITE D (107-9)(108-9)
INHIBIT D (109-8)
STROBE D (112-52)
GRD (112-51)
SET DDC2 (203-39)

A2 7440
C3 7400
D3 7400
B3 7400
A3 7404
D2 74121 100 NS
D1 74121 100-350NS
E2 74121 100 NS
E1 74121 100-350NS
B4 7470
A4 7410
A3 7404
Vcc
1.5K R3 1/4 W
CP4 100pf
1K R11 5K
1.5K R6 1/4 W
CP7 100pf
1K R12 5K
1.5K R5 1/4 W
CP6 100pf
1.5K R4 1/4 W
CP5 100pf

230
(2337)

50 (227-19) C
63 (227-3) READ
62 (227-13) WRITE
64 (227-27) INHIBIT
48 (227-77) D
53 (215-69) STROBE B
47 (215-16) C2
69 (202-55) DDPE C3
73 (103-7) IC12 C3
78 (219-9) C4C 2
77 (318-72) C(IAC)=C(DAC)
75 (103-22) IC14

© by IMLAC CORP. 1970 1971 1979

	BY	DATE
LAYOUT	H.C.M.	5/24/71
DRAWN	H.C.M.	5/24/71
CHECKED		
APPROVED		
ISSUE		
COPIED		
MATERIAL		

IMLAC CORPORATION
206 NEWTON STREET
WALTHAM, MASSACHUSETTS 02154

PROJECT

TITLE
16 K
MEMORY CONTROL

PREFIX	SIZE	DRAWING NUMBER	REV.
L	D	901-16K	A

Scale

Sheet

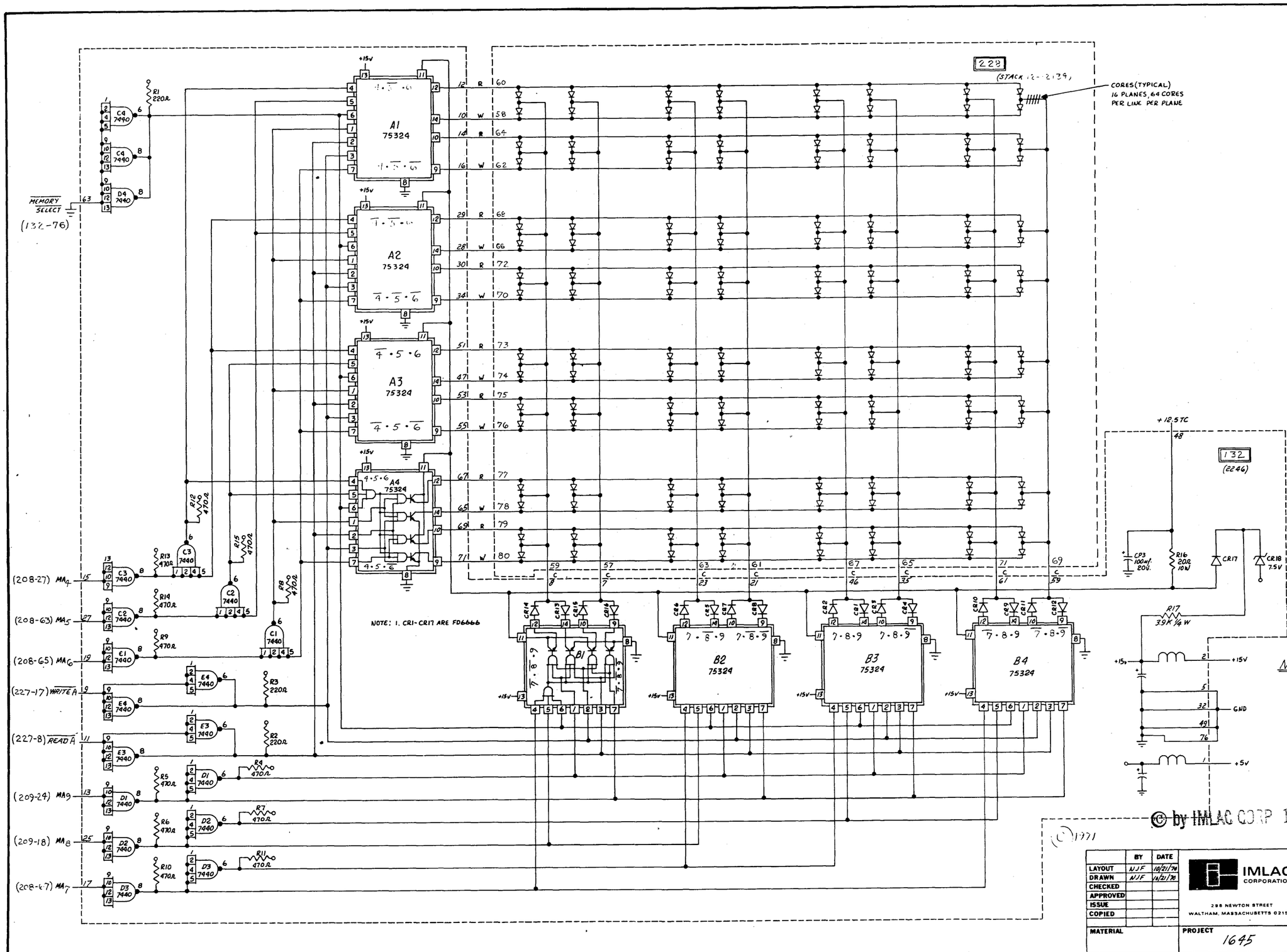

NOTES:

1. EXPRESSIONS IN BOXES A1-A4 & B1-B4 INDICATE THE STATES OF THE MEMORY ADDRESS REGISTER WHICH CAUSE THE CORRESPONDING READ AND WRITE FUNCTIONS TO BE ENABLED.

© by IMLAC CORP 1970, 1971, 1972

REV.	ECN	DATE	DFTMN	APPVD.

	BY	DATE
LAYOUT	NJF	10/21/70
DRAWN	NJF	10/21/70
CHECKED		
APPROVED		
ISSUE		
COPIED		
MATERIAL		

IMLAC CORPORATION
298 NEWTON STREET
WALTHAM, MASSACHUSETTS 02154

PROJECT 1645

TITLE SECTION A X ADDRESS SELECTION

PREFIX	SIZE	DRAWING NUMBER	REV.
L	D	302 A	C

Scale | Sheet

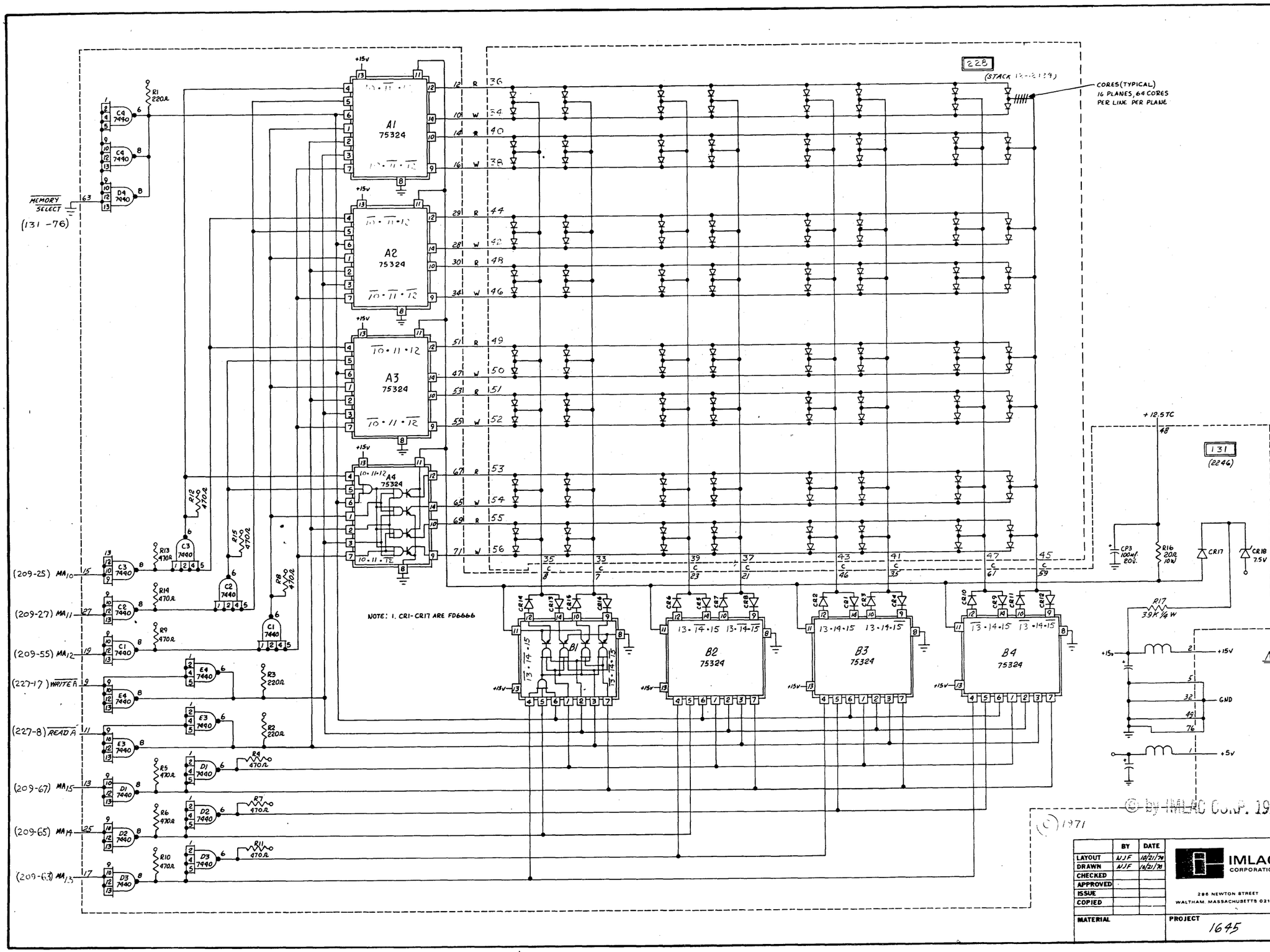

REV.	ECN	DATE	DFTMN	APPVD.
		[illegible]	[illegible]	[illegible]

NOTES:

1. EXPRESSIONS IN BOXES A1-A4 & B1-B4 INDICATE THE STATES OF THE MEMORY ADDRESS REGISTER WHICH CAUSE THE CORRESPONDING READ AND WRITE FUNCTIONS TO BE ENABLED.

© by IMLAC CORP. 1970, 1971, 1972

(C) 1971

	BY	DATE
LAYOUT	NJF	10/21/70
DRAWN	NJF	10/21/70
CHECKED		
APPROVED		
ISSUE		
COPIED		
MATERIAL		

IMLAC CORPORATION
296 NEWTON STREET
WALTHAM, MASSACHUSETTS 02154

PROJECT 1645

TITLE SECTION A
Y ADDRESS SELECTION

PREFIX	SIZE	DRAWING NUMBER	REV.
L	D	[illegible]	C

Scale | Sheet

REV.	ECN	DATE	DFTMN	APPVD.
A	---	8-26-71	J.V.	[illegible]
B	---	28SEP71	GB	[illegible]

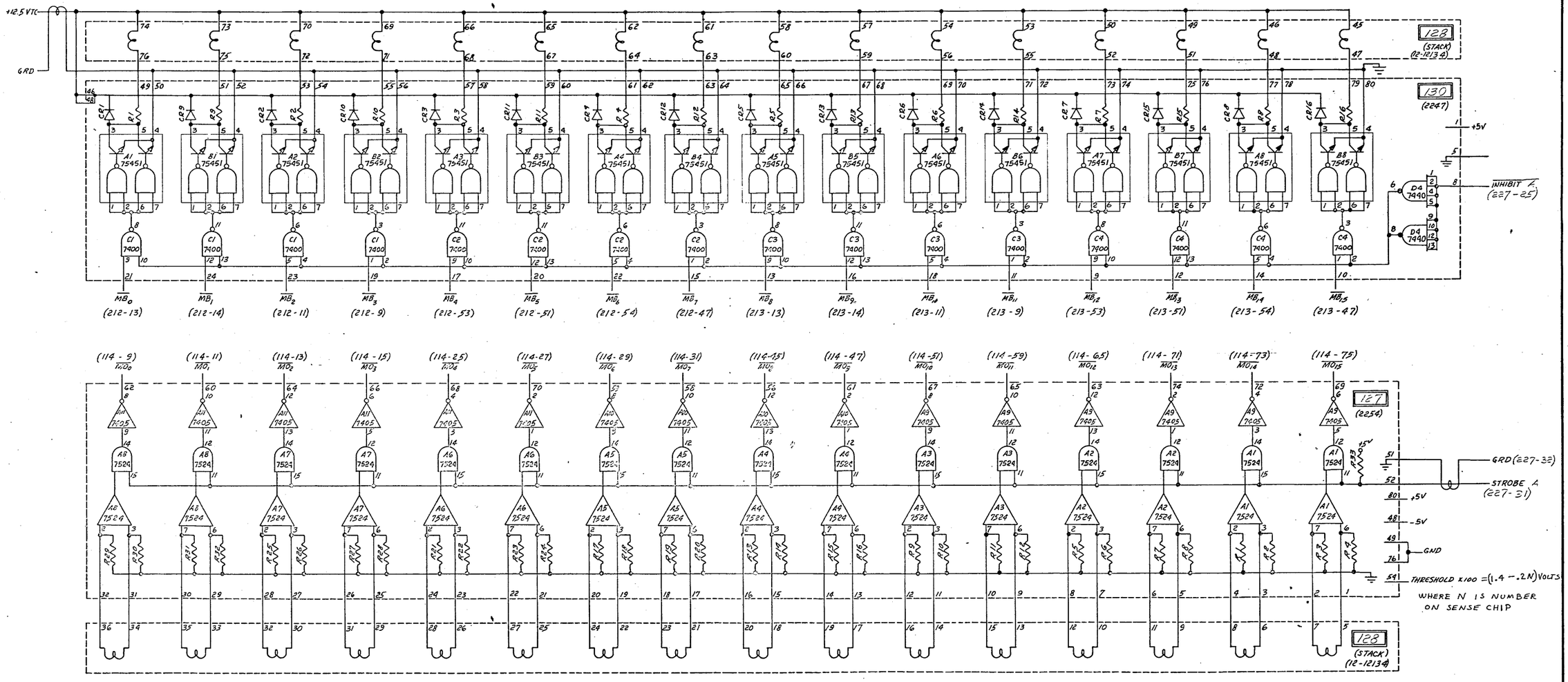

© by IMLAC CORP. 1970, 1971, 1972

DWG. NO. WAS 904-16K.

	BY	DATE
LAYOUT	NJF	10/26/70
DRAWN	NJF	11/26/70
CHECKED		
APPROVED		
ISSUE		
COPIED		
MATERIAL		

IMLAC CORPORATION
296 NEWTON STREET
WALTHAM, MASSACHUSETTS 02154

PROJECT

TITLE SECTION A INHIBIT & SENSE AMPLIFIERS 16 K CONFIGURATION

PREFIX	SIZE	DRAWING NUMBER	REV.
L	D	904-A	B

Scale

Sheet

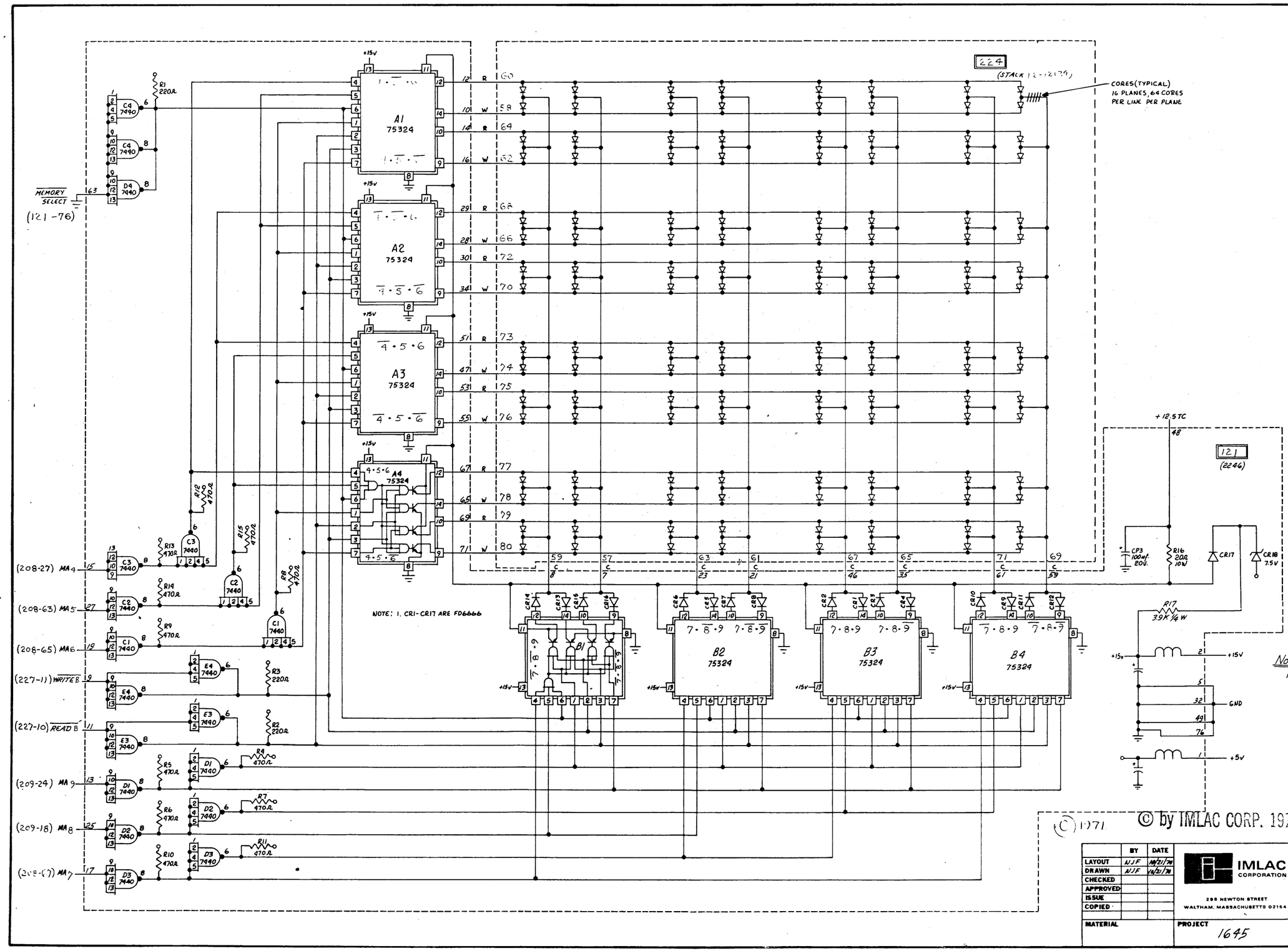

NOTES:

1. EXPRESSIONS IN BOXES A1-A4 & B1-B4 INDICATE THE STATES OF THE MEMORY ADDRESS REGISTER WHICH CAUSE THE CORRESPONDING READ AND WRITE FUNCTIONS TO BE ENABLED.

REV.	ECN	DATE	DFTMN	APPVD.

© by IMLAC CORP. 1970, 1971, 1972

	BY	DATE
LAYOUT	NJF	10/21/70
DRAWN	NJF	10/21/70
CHECKED		
APPROVED		
ISSUE		
COPIED		
MATERIAL		

IMLAC CORPORATION
295 NEWTON STREET
WALTHAM, MASSACHUSETTS 02154

PROJECT 1645

TITLE SECTION B X ADDRESS SELECTION

PREFIX	SIZE	DRAWING NUMBER	REV.
L	D	905 A	C

Scale | Sheet

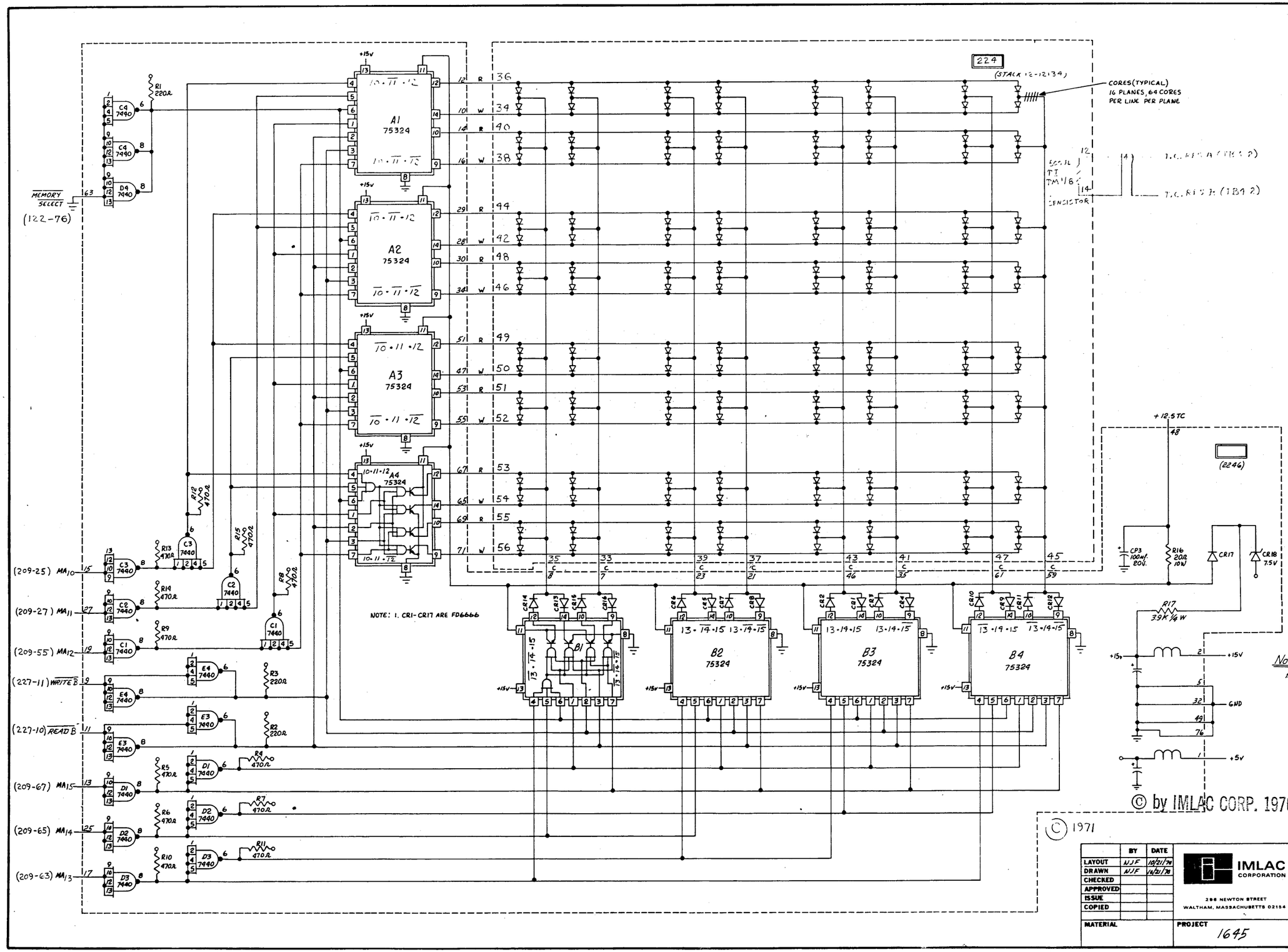

NOTES:

1. EXPRESSIONS IN BOXES A1-A4 & B1-B4 INDICATE THE STATES OF THE MEMORY ADDRESS REGISTER WHICH CAUSE THE CORRESPONDING READ AND WRITE FUNCTIONS TO BE ENABLED.

© by IMLAC CORP. 1970, 1971, 1972

© 1971

REV.	ECN	DATE	DFTMN	APPVD.
C		[illegible]	GB	[illegible]

	BY	DATE
LAYOUT	NJF	10/21/70
DRAWN	NJF	10/21/70
CHECKED		
APPROVED		
ISSUE		
COPIED		
MATERIAL		

IMLAC CORPORATION
296 NEWTON STREET
WALTHAM, MASSACHUSETTS 02154

PROJECT 1645

TITLE SECTION B Y ADDRESS SELECTION

PREFIX	SIZE	DRAWING NUMBER	REV.
L	D	306 A	C

Scale | Sheet

REV.	ECN	DATE	DFTMN	APPVD.
A	---	8-26-71	J.V.	

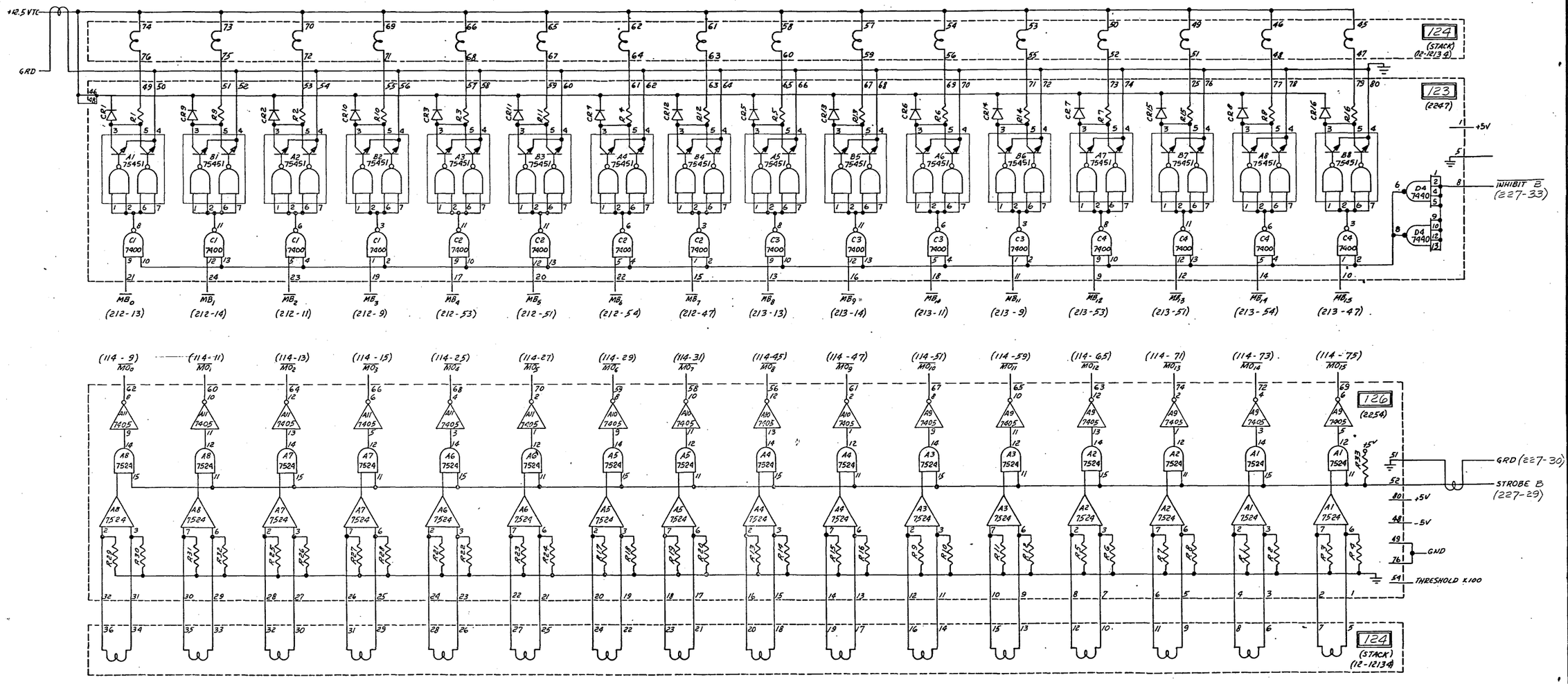

© by IMLAC CORP. 1970, 1971, 1972

DWG. NO. WAS 907-16K

	BY	DATE
LAYOUT	NJS	10/26/70
DRAWN	NJS	11/26/71
CHECKED		
APPROVED		
ISSUE		
COPIED		
MATERIAL		

IMLAC CORPORATION
206 NEWTON STREET
WALTHAM, MASSACHUSETTS 02184

PROJECT

TITLE SECTION B INHIBIT & SENSE AMPLIFIERS 16 K CONFIGURATION

PREFIX	SIZE	DRAWING NUMBER	REV.
L	D	907-A	A

Scale | Sheet

REV.	ECN	DATE	DFTMN	APPVD.
A	-	27 Nov 71	H.C.M.	HPB

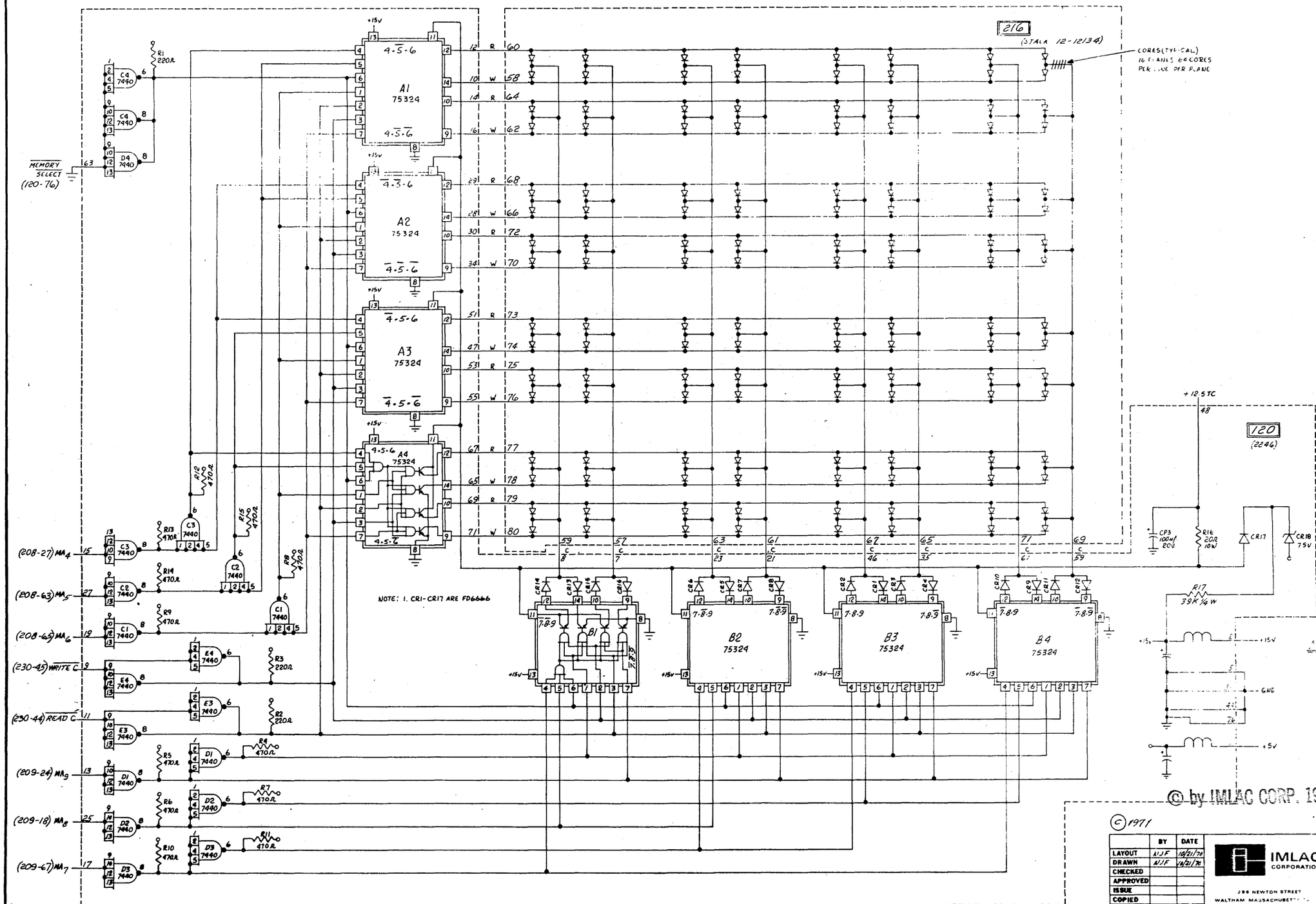

NOTES:
1. EXPRESSIONS IN BOXES A1-A4 & B1-B4 INDICATE THE STATES OF THE MEMORY ADDRESS REGISTER WHICH CAUSE THE CORRESPONDING READ AND WRITE FUNCTIONS TO BE ENABLED

© by IMLAC CORP. 1970, 1971, 1972

© 1971

	BY	DATE
LAYOUT	NJF	10/21/70
DRAWN	NJF	10/21/70
CHECKED		
APPROVED		
ISSUE		
COPIED		
MATERIAL		

IMLAC CORPORATION
298 NEWTON STREET
WALTHAM MASSACHUSETTS

PROJECT 1645

TITLE SECTION C
X ADDRESS SECTION
16 K CONFIGURATION

PREFIX	SIZE	DRAWING NUMBER	REV
L	D	908-16K	A
Scale		Sheet	

REV.	ECN	DATE	DFTMN	APPVD.
A	-	27 Aug 71	H.C.M.	[illegible]

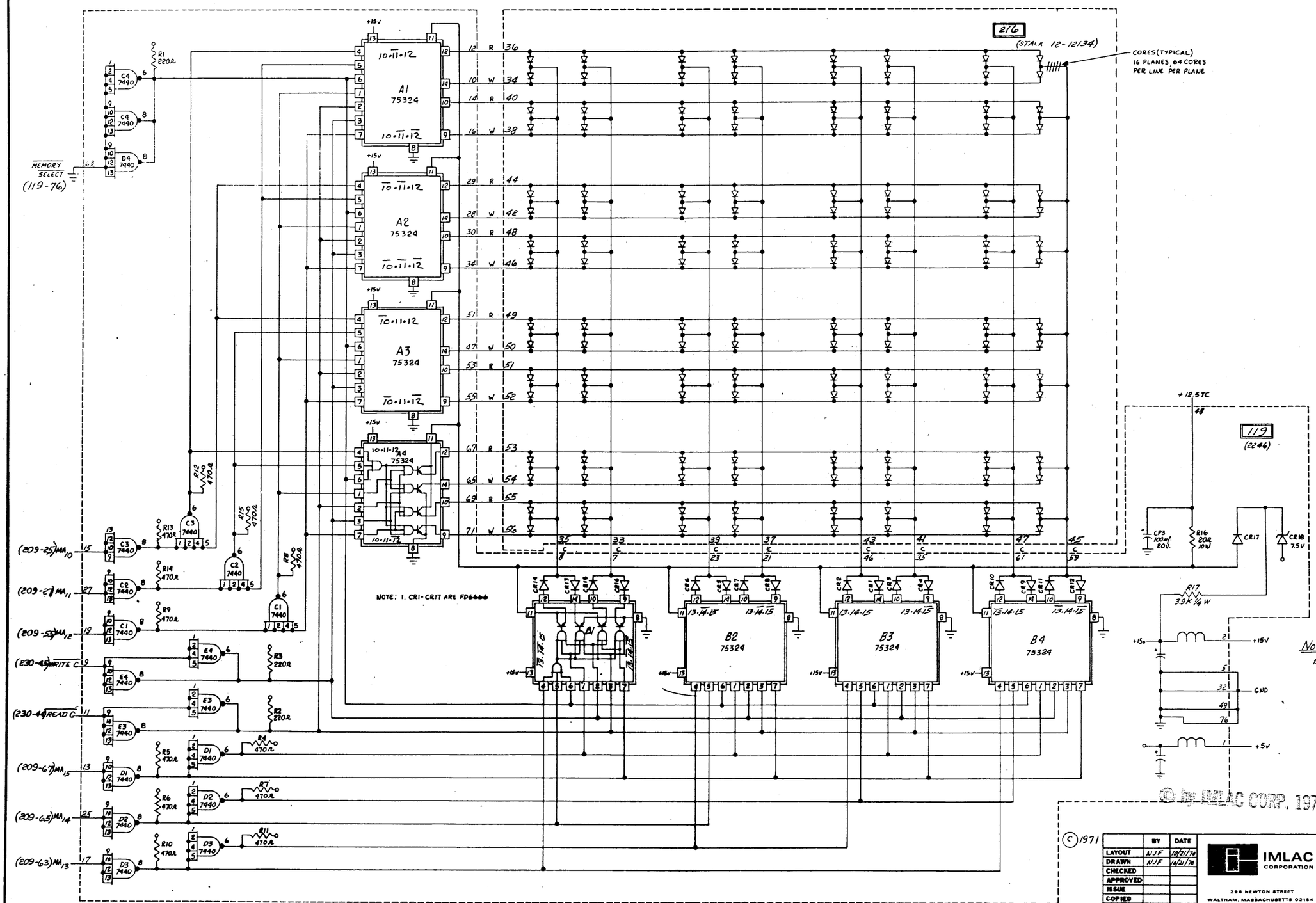

NOTES:

1. EXPRESSIONS IN BOXES A1-A4 & B1-B4 INDICATE THE STATES OF THE MEMORY ADDRESS REGISTER WHICH CAUSE THE CORRESPONDING READ AND WRITE FUNCTIONS TO BE ENABLED.

© by IMLAC CORP. 1970, 1971, 1972

© 1971

	BY	DATE
LAYOUT	NJF	10/21/70
DRAWN	NJF	10/21/70
CHECKED		
APPROVED		
ISSUE		
COPIED		
MATERIAL		

IMLAC CORPORATION
296 NEWTON STREET
WALTHAM, MASSACHUSETTS 02154

PROJECT 1645

TITLE SECTION C
Y ADDRESS SELECTION
16K CONFIGURATION

PREFIX	SIZE	DRAWING NUMBER	REV.
L	D	909-16K	A

Scale | Sheet

REV.	ECN	DATE	DFTMN	APPVD.

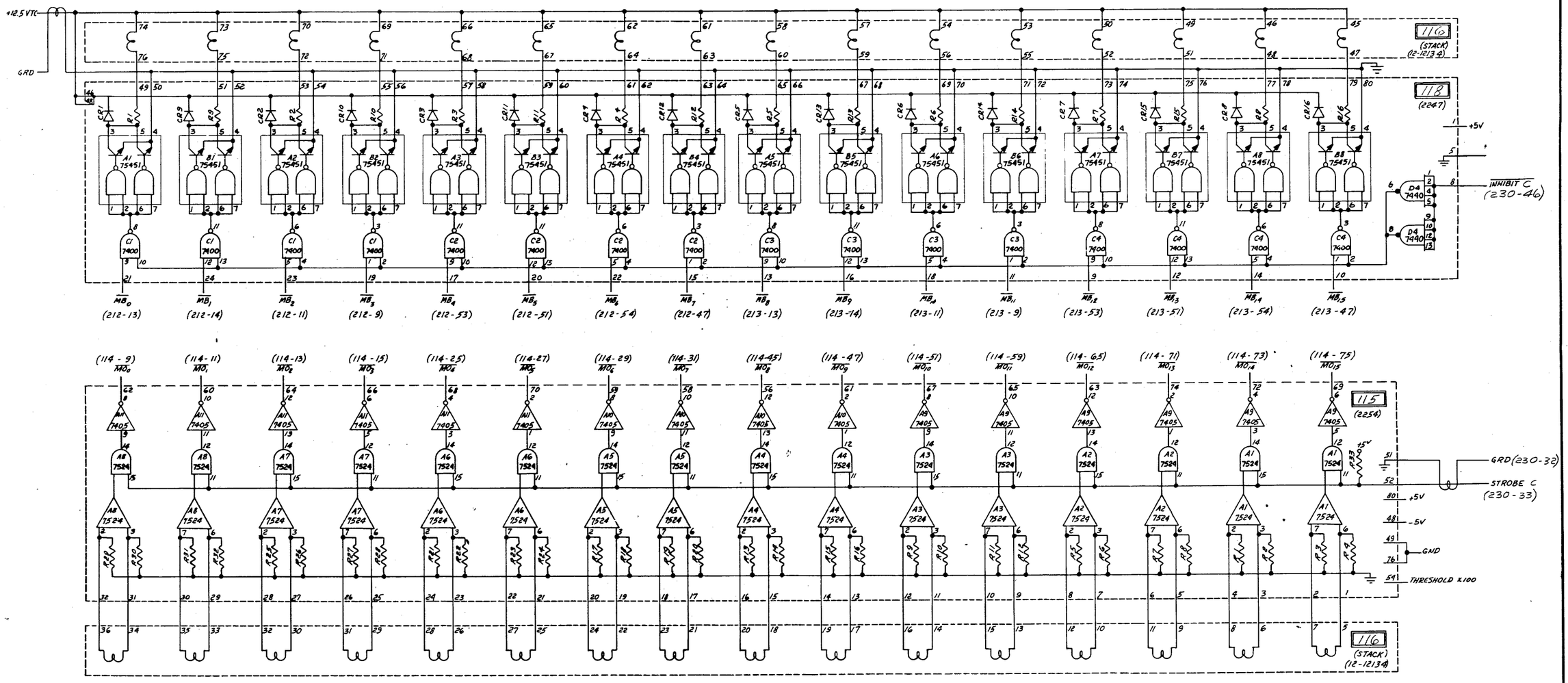

© by IMLAC CORP. 1970, 1971, 1972

	BY	DATE
LAYOUT	WJS	11/26/70
DRAWN	WJS	11/26/70
CHECKED		
APPROVED		
ISSUE		
COPIED		
MATERIAL		

IMLAC CORPORATION
285 NEWTON STREET
WALTHAM, MASSACHUSETTS 02154

PROJECT

TITLE SECTION C INHIBIT & SENSE AMPLIFIERS 16 K CONFIGURATION

PREFIX	SIZE	DRAWING NUMBER	REV.
L	D	910-16K	

Scale | Sheet

REV.	ECN	DATE	DFTMN	APPVD.
A	-	27 Aug 71	H.C.M.	[illegible]

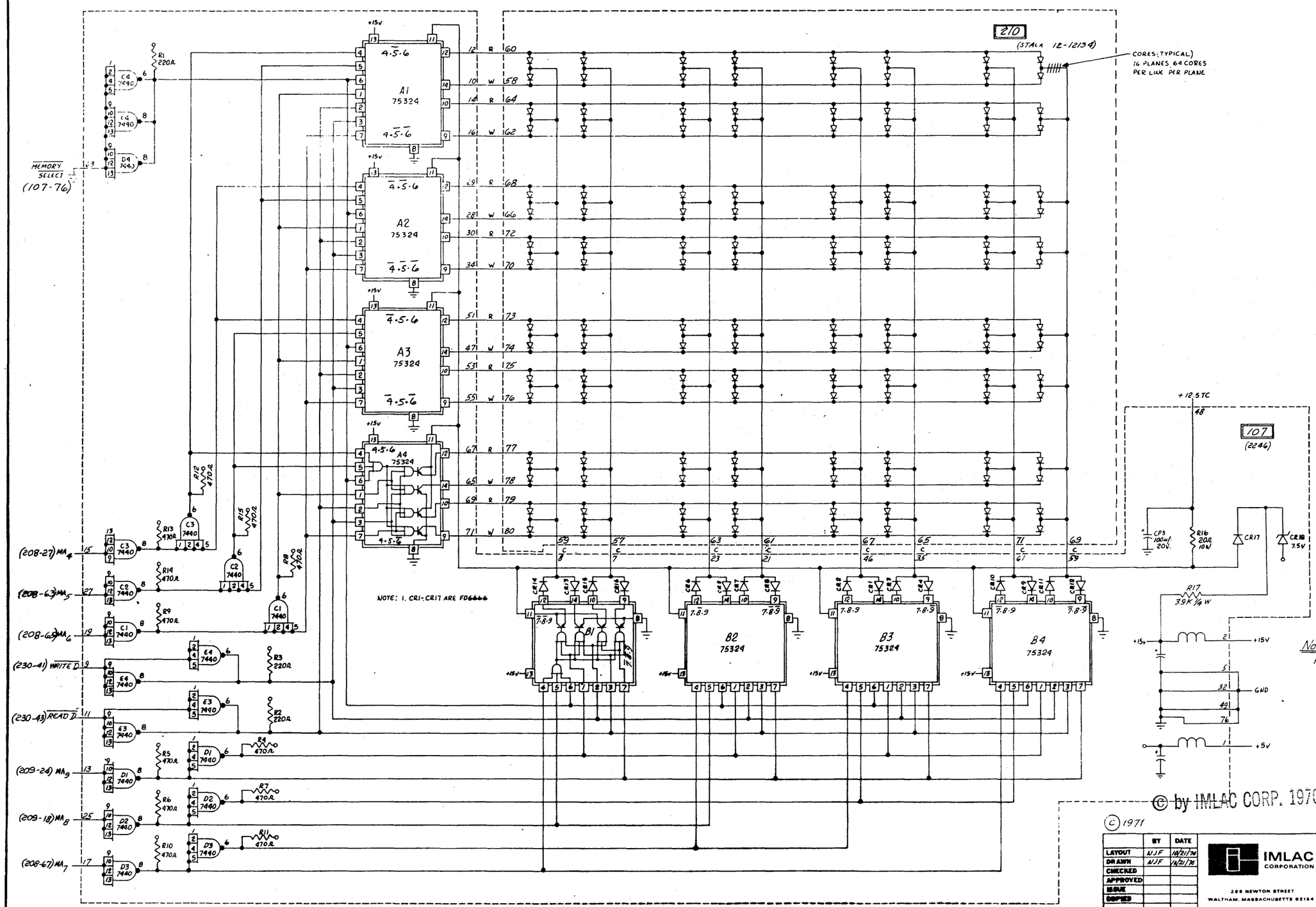

NOTES:

1 EXPRESSIONS IN BOXES A1-A4 & B1-B4 INDICATE THE STATES OF THE MEMORY ADDRESS REGISTER WHICH CAUSE THE CORRESPONDING READ AND WRITE FUNCTIONS TO BE ENABLED.

© by IMLAC CORP. 1970, 1971, 1972

© 1971

	BY	DATE
LAYOUT	NJF	10/21/70
DRAWN	NJF	10/21/70
CHECKED		
APPROVED		
ISSUE		
COPIED		
MATERIAL		

IMLAC CORPORATION
295 NEWTON STREET
WALTHAM, MASSACHUSETTS 02154

PROJECT 1645

TITLE SECTION D
X ADDRESS SELECTION
16 K CONFIGURATION

PREFIX	SIZE	DRAWING NUMBER	REV.
L	D	311-16K	A

Scale | Sheet

REV.	ECN	DATE	DFTMN	APPVD.
A	–	27AUG71	H.C.M.	[illegible]

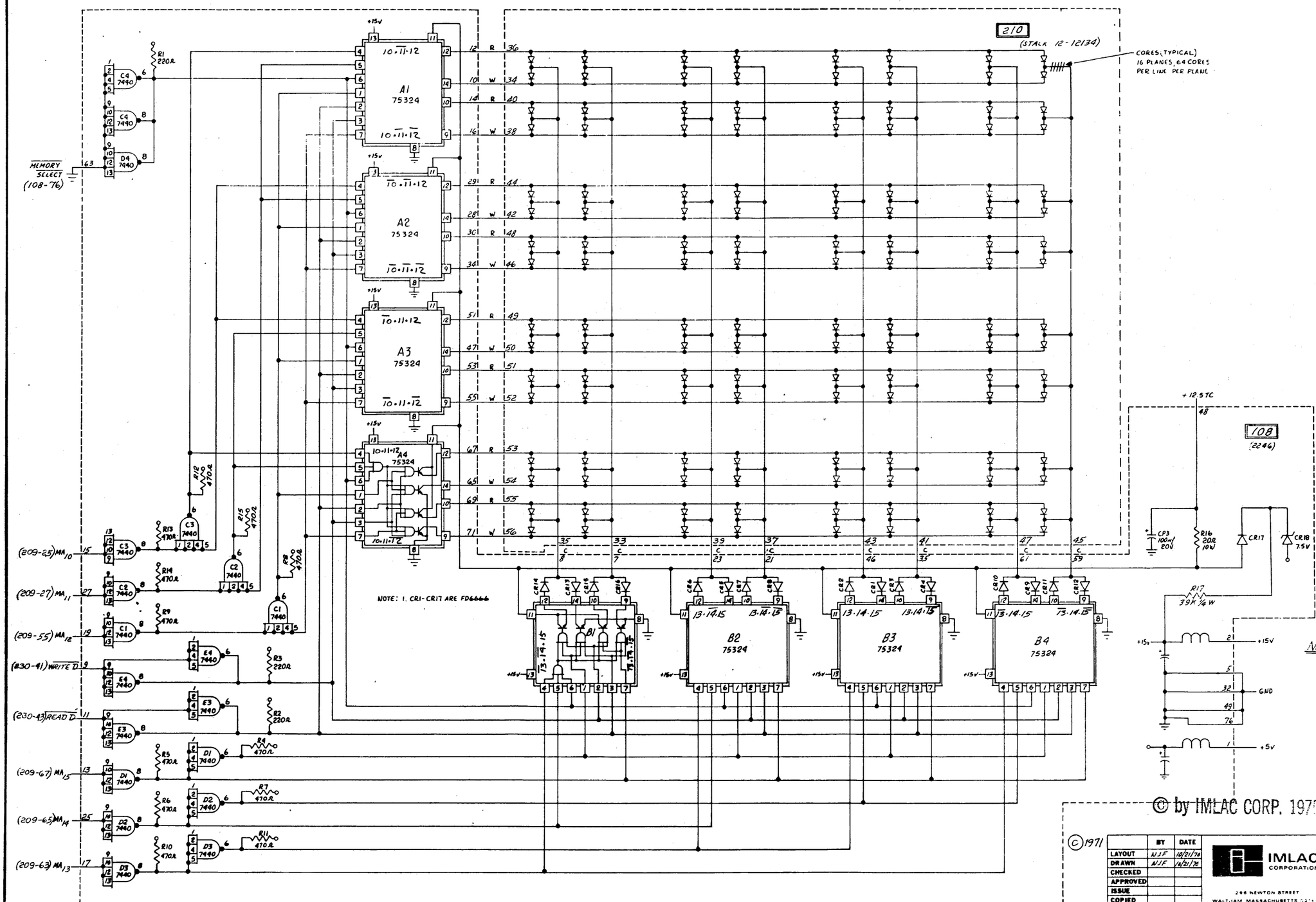

NOTES:

1. EXPRESSIONS IN BOXES A1-A4 & B1-B4 INDICATE THE STATES OF THE MEMORY ADDRESS REGISTER WHICH CAUSE THE CORRESPONDING READ AND WRITE FUNCTIONS TO BE ENABLED.

© by IMLAC CORP. 1970, 1971, 1972

©1971

	BY	DATE
LAYOUT	NJF	10/21/70
DRAWN	NJF	10/21/70
CHECKED		
APPROVED		
ISSUE		
COPIED		
MATERIAL		

IMLAC CORPORATION
296 NEWTON STREET
WALTHAM MASSACHUSETTS 02154

PROJECT 1645

TITLE SECTION D
Y ADDRESS SELECTION
16 K CONFIGURATION

PREFIX	SIZE	DRAWING NUMBER	REV.
L	D	912-16K	A

Scale | Sheet

REV.	ECN	DATE	DFTMN	APPVD.

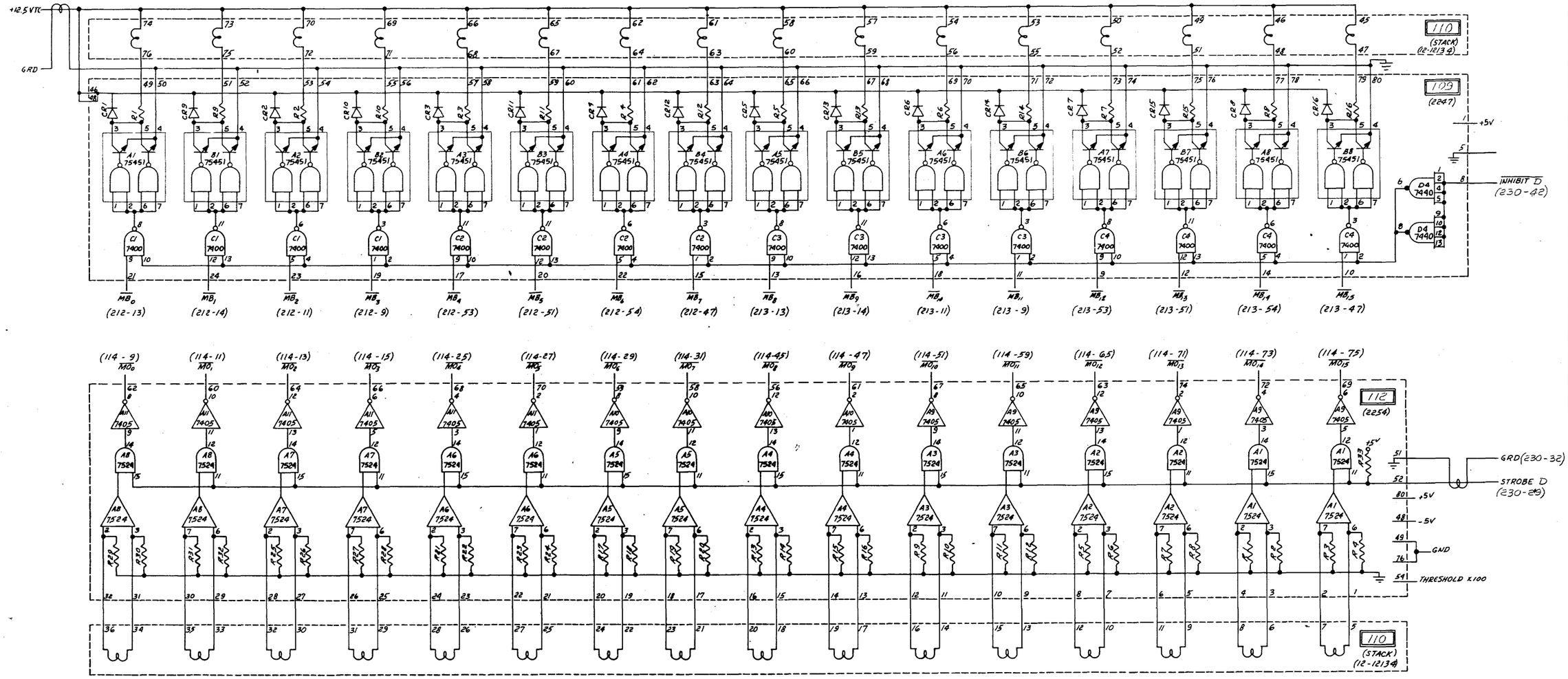

© by IMLAC CORP. 1970, 1971, 1972

	BY	DATE
LAYOUT	NJF	11/26/70
DRAWN	NJF	4/26/71
CHECKED		
APPROVED		
ISSUE		
COPIED		
MATERIAL		

IMLAC CORPORATION
296 NEWTON STREET
WALTHAM, MASSACHUSETTS 02154
PROJECT

TITLE SECTION D INHIBIT & SENSE AMPLIFIERS 16 K CONFIGURATION

PREFIX	SIZE	DRAWING NUMBER	REV.
L	D	513-16K	

Scale | Sheet

REV	ECN	DATE	DFTMN	APP'V
A	—	23 FEB 72	R.T.M.	
B	—	28 MAR 72	GB	[illegible]

329
(2356-04)

DPC_M (304-11)
DTM (304-13)
[C(07) ⇒ C(OAC)] ∘ DTM (316-22)
C(07) ⇒ C(OPC) (201-17)
SKPMM (223-28)
AT_14 (222-63)
AT_12 (222-69)
AT_10 (221-63)
EXT INT (214-69)
AT_11 (221-69)
AI5 (220-67)
AI4 (220-69)
AI7 (220-64)* (322-30)

R1 5.1Ω ½W
CP2 330PF
C9 74H11
B3 7403
B3 7403
C2 7400
B1 7470 MARKER F.F.
C1 7400
C3 7473
C4 7411
B2 7404
A1 7430
A2 7430
A3 7403
B4 7403
A4 7475
D2 7403
D3 7403
D4 7475
B2 7409
B3 7403
R2 1K ½W Vcc
R3 100Ω ½W
CP3 56PF
R4 100Ω ½W
CP4 56PF

(202-34) DISP AV
DISP OFF SYNC
40SL & DISPLAY OFF
(103-78) 40 SLSYNC
(318-35) I₀ A3
(218-25) I₀ B₀
(318-9) I₀ P₃
ST. DISP (226-70)
IC15 (103-23)
EOM B (215-69)
D7 (202-49)
IC14 (103-8)
IC13 (103-9)
IC12 (103-4)
IC11 (103-5)
IC10 (103-6)
IC9 (103-24)
IC8 (103-7)
IC7 (103-25)
IC6 (103-22)
IC5 (103-21)
IC4 (103-20)
IOT IRI (318-55)
GAC₁₅ (222-4)
TTY IN (227-10)
GAC₁₃ (222-14)
TTY OUT (320-80)
GAC₁₀ (221-4)
KEY 80 (JF-V)
IOT IR₁ (318-44)
GAC₇ (221-3)
(331-10) TKAIN
(220-12) GAC5
(332-80) TKA OUT
(220-14) GAC4
(323-33 IF PNCH) PUNCH STATUS (323-60 IF BRPE)*
(220-3) GAC 7

* THESE FOUR CONNECTIONS MADE ONLY IF PUNCH INTERFACE.

© by IMLAC CORP. 1970, 1971, 1972

© 1971 SEPIA MADE FROM 928 REV. E 28 DEC 71 R.T.M.

	BY	DATE
LAYOUT	H.C.M.	23 Jun 71
DRAWN	H.C.M.	26 Jun 71
CHECKED		
APPROVED		
ISSUE		
COPIED		
MATERIAL		

IMLAC CORPORATION
286 NEWTON STREET
WALTHAM MASSACHUSETTS 02154

PROJECT

TITLE 8 LEVEL LIGHT PEN ADAPTER & INTERRUPTS FOR "D" PACKAGE

PREFIX	SIZE	DRAWING NUMBER	REV
L	D	975	E
Scale		Sheet	4

REV	ECN	DATE	DFTMN	APPV

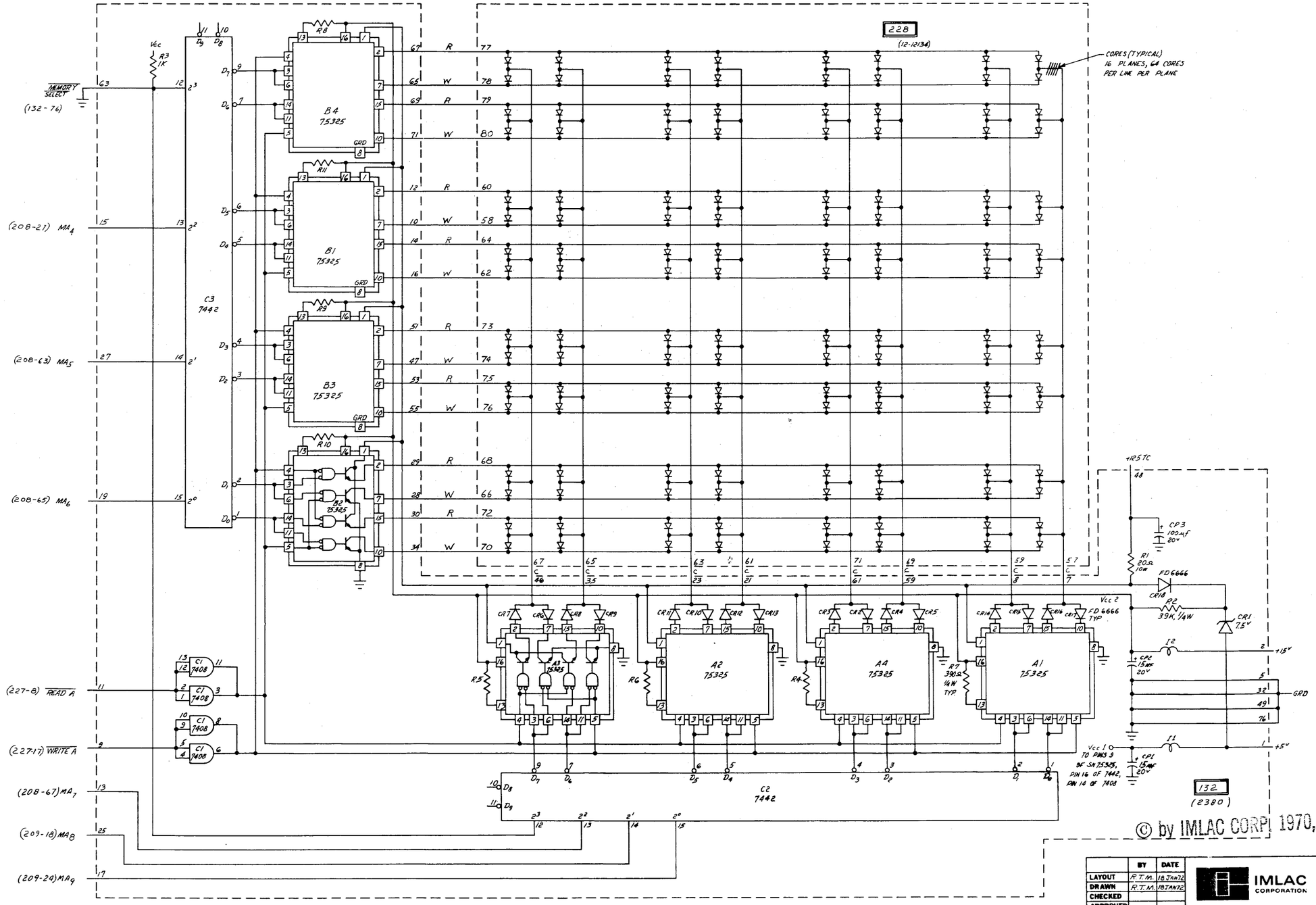

© by IMLAC CORP. 1970, 1971, 1972

	BY	DATE
LAYOUT	R.T.M.	18JAN72
DRAWN	R.T.M.	18JAN72
CHECKED		
APPROVED		
ISSUE		
COPIED		
MATERIAL		

IMLAC CORPORATION
288 NEWTON STREET
WALTHAM, MASSACHUSETTS 02154

PROJECT

TITLE
SECTION A
XADDRESS SELECTION

PREFIX	SIZE	DRAWING NUMBER	REV.
	D	983	

Scale | Sheet

REV	ECN	DATE	DFTMN	APPV

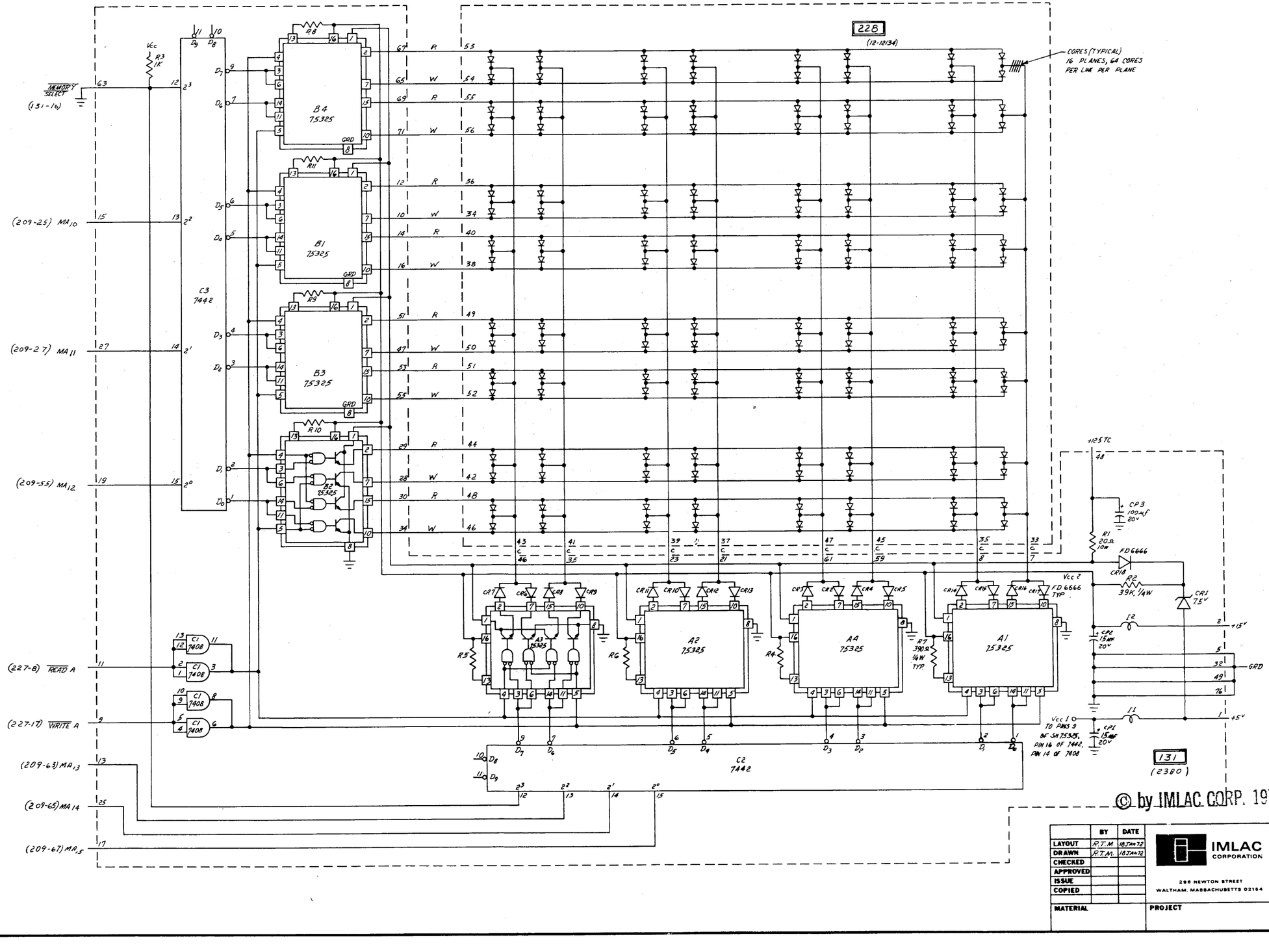

© by IMLAC CORP. 1970, 1971, 1972

	BY	DATE
LAYOUT	R.T.M.	18 JAN 72
DRAWN	R.T.M.	18 JAN 72
CHECKED		
APPROVED		
ISSUE		
COPIED		
MATERIAL		

IMLAC CORPORATION
296 NEWTON STREET
WALTHAM, MASSACHUSETTS 02154

PROJECT

TITLE
SECTION A
Y ADDRESS SELECTION

PREFIX	SIZE	DRAWING NUMBER	REV.
	D	984	
Scale		Sheet	

REV	ECN	DATE	DFTMN	APRV

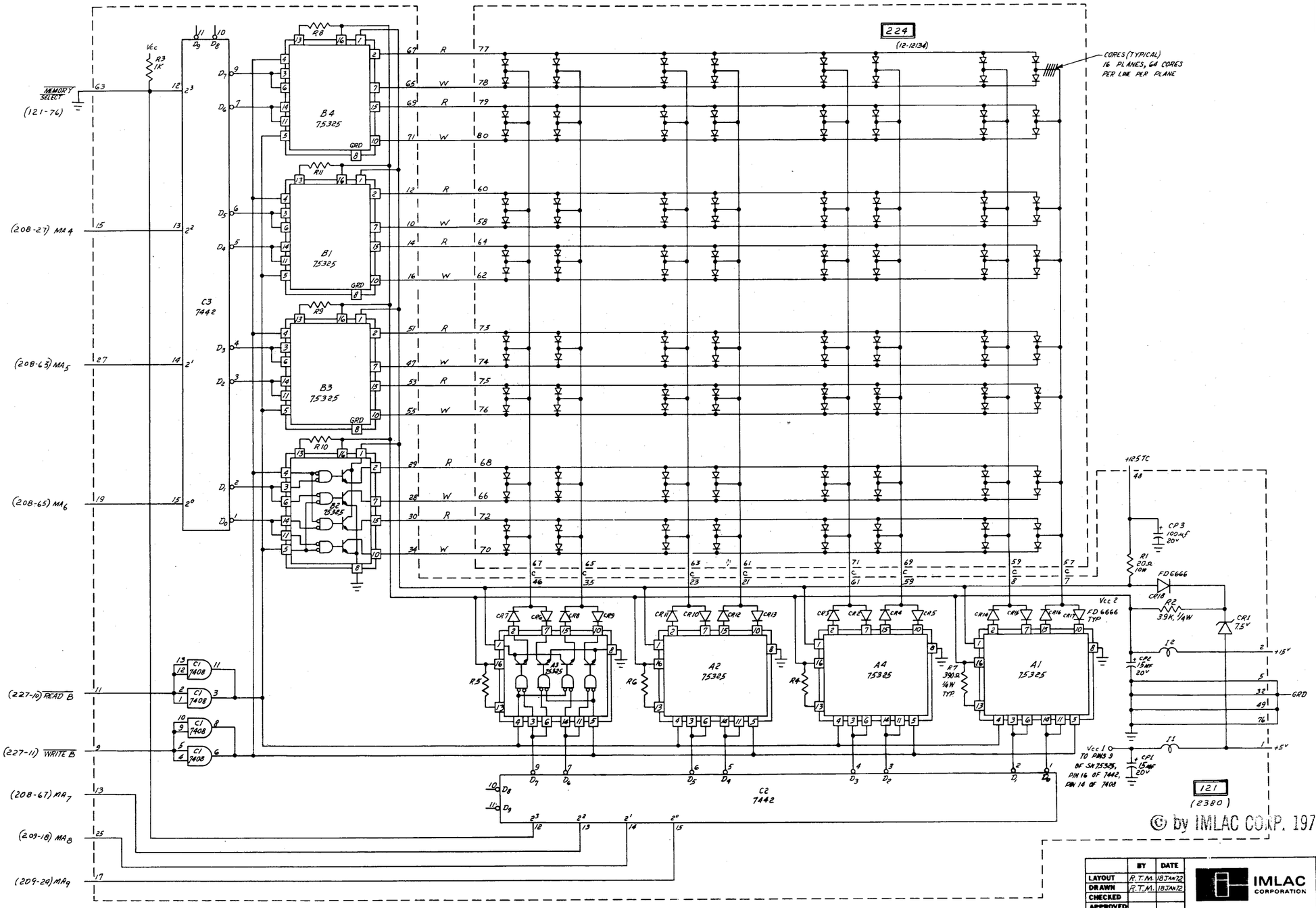

© by IMLAC CORP. 1970, 1971, 1972

	BY	DATE
LAYOUT	R.T.M.	18JAN72
DRAWN	R.T.M.	18JAN72
CHECKED		
APPROVED		
ISSUE		
COPIED		
MATERIAL		

IMLAC CORPORATION
296 NEWTON STREET
WALTHAM, MASSACHUSETTS 02154

PROJECT

TITLE
SECTION B
XADDRESS SELECTION

PREFIX	SIZE	DRAWING NUMBER	REV.
	D	985	

Scale | Sheet

REV	ECN	DATE	DFTMN	APPV

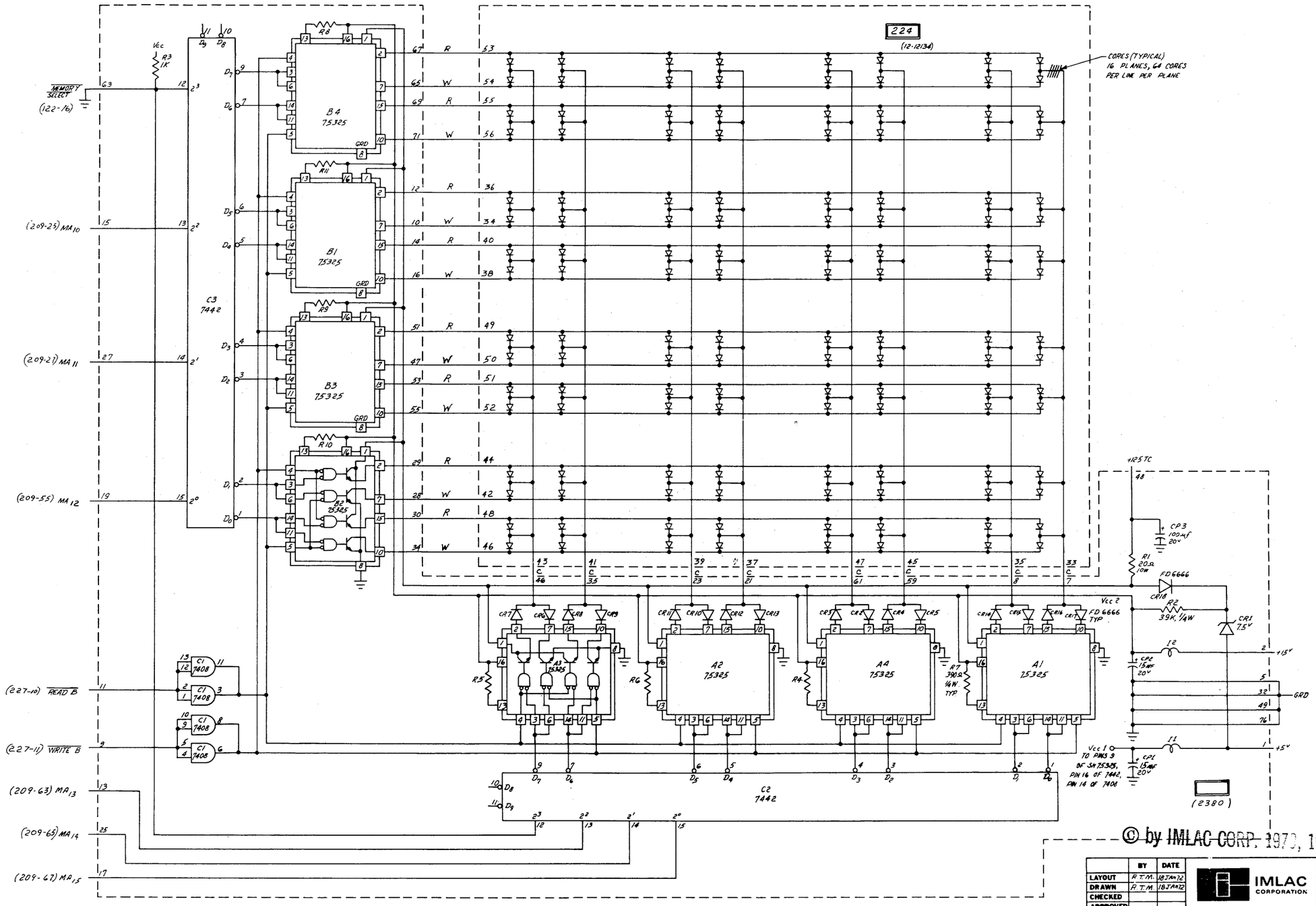

© by IMLAC CORP. 1970, 1971, 1972

	BY	DATE
LAYOUT	R.T.M.	18JAN72
DRAWN	R.T.M.	18JAN72
CHECKED		
APPROVED		
ISSUE		
COPIED		
MATERIAL		

IMLAC CORPORATION
288 NEWTON STREET
WALTHAM, MASSACHUSETTS 02154

PROJECT

TITLE
SECTION B
YADDRESS SELECTION

PREFIX	SIZE	DRAWING NUMBER	REV.
		986	

Scale | Sheet

REV	ECN	DATE	DFTMN	APPV

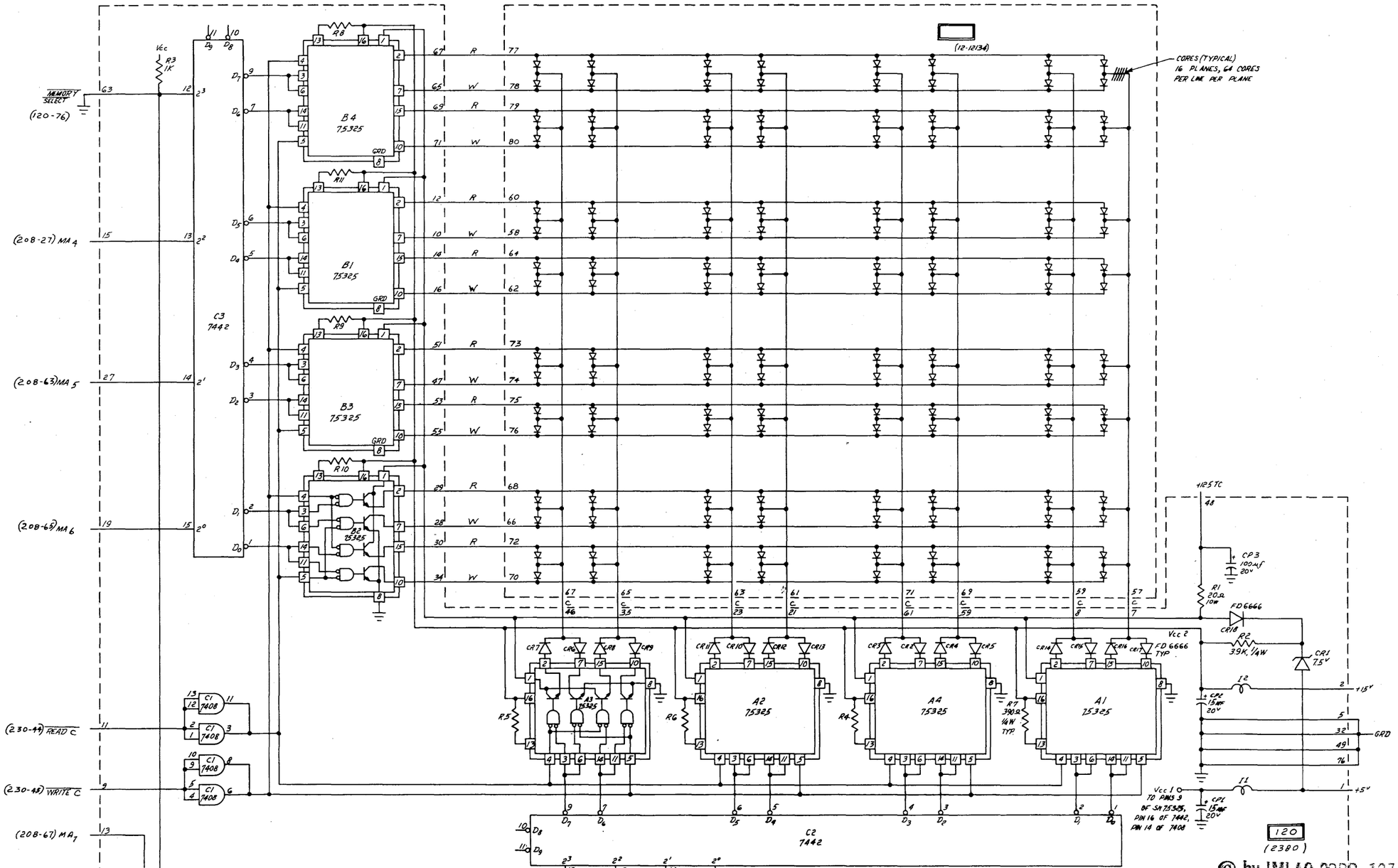

© by IMLAC CORP. 1970, 1971, 1972

	BY	DATE
LAYOUT	R. T. M.	19 JAN 72
DRAWN	R. T. M.	19 JAN 72
CHECKED		
APPROVED		
ISSUE		
COPIED		
MATERIAL		

IMLAC CORPORATION
296 NEWTON STREET
WALTHAM, MASSACHUSETTS 02154

PROJECT

TITLE
SECTION C
X ADDRESS SELECTION

PREFIX	SIZE	DRAWING NUMBER	REV.
L	D	987	

Scale | Sheet

REV	ECN	DATE	DFTMN	APPV

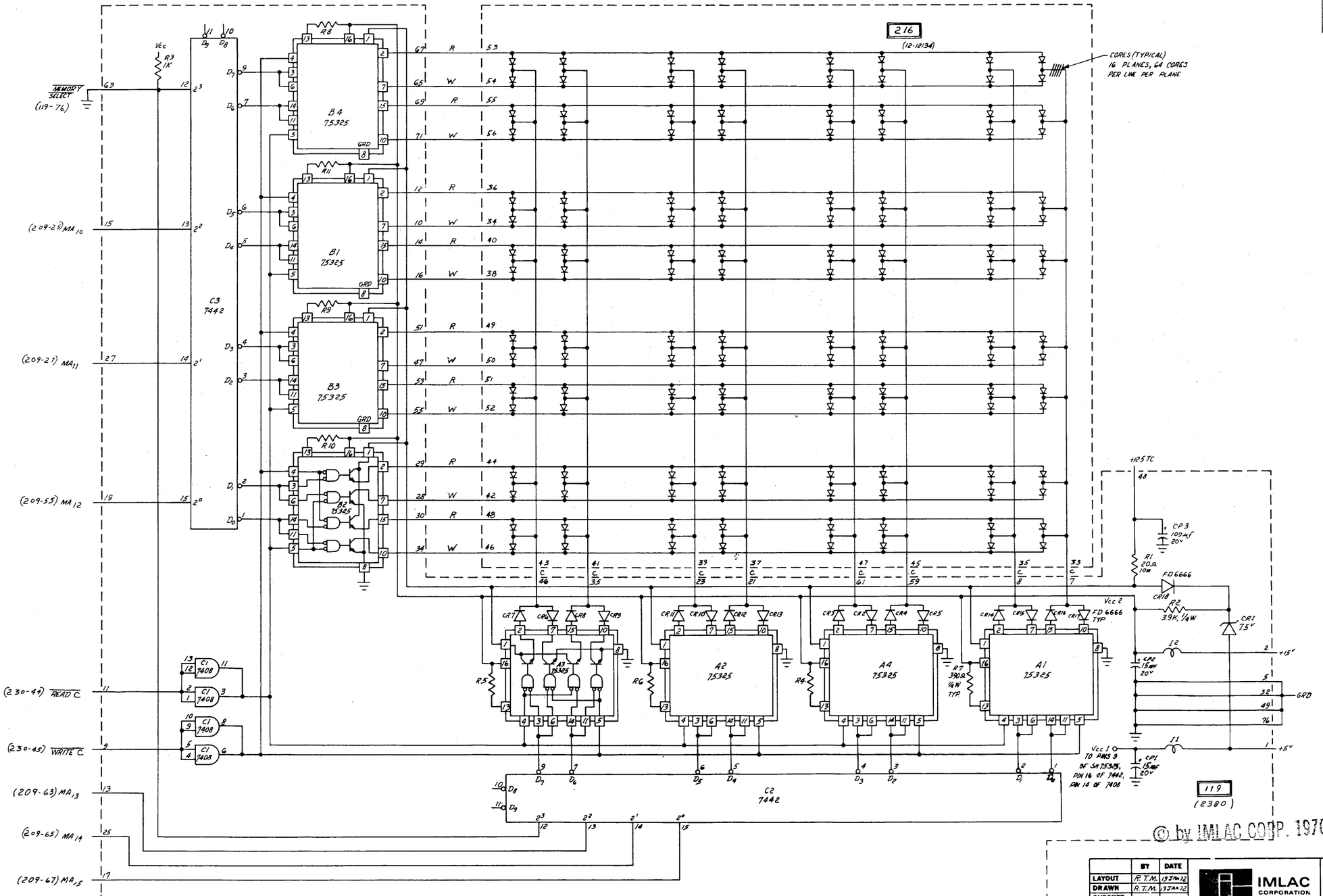

© by IMLAC CORP. 1970, 1971, 1972

	BY	DATE
LAYOUT	R.T.M.	19 JAN 72
DRAWN	R.T.M.	19 JAN 72
CHECKED		
APPROVED		
ISSUE		
COPIED		
MATERIAL		

IMLAC CORPORATION
288 NEWTON STREET
WALTHAM, MASSACHUSETTS 02184

PROJECT

TITLE
SECTION C
Y ADDRESS SELECTION

PREFIX	SIZE	DRAWING NUMBER	REV.
L	D	988	

Scale

Sheet

REV	ECN	DATE	DFTMN	APPV

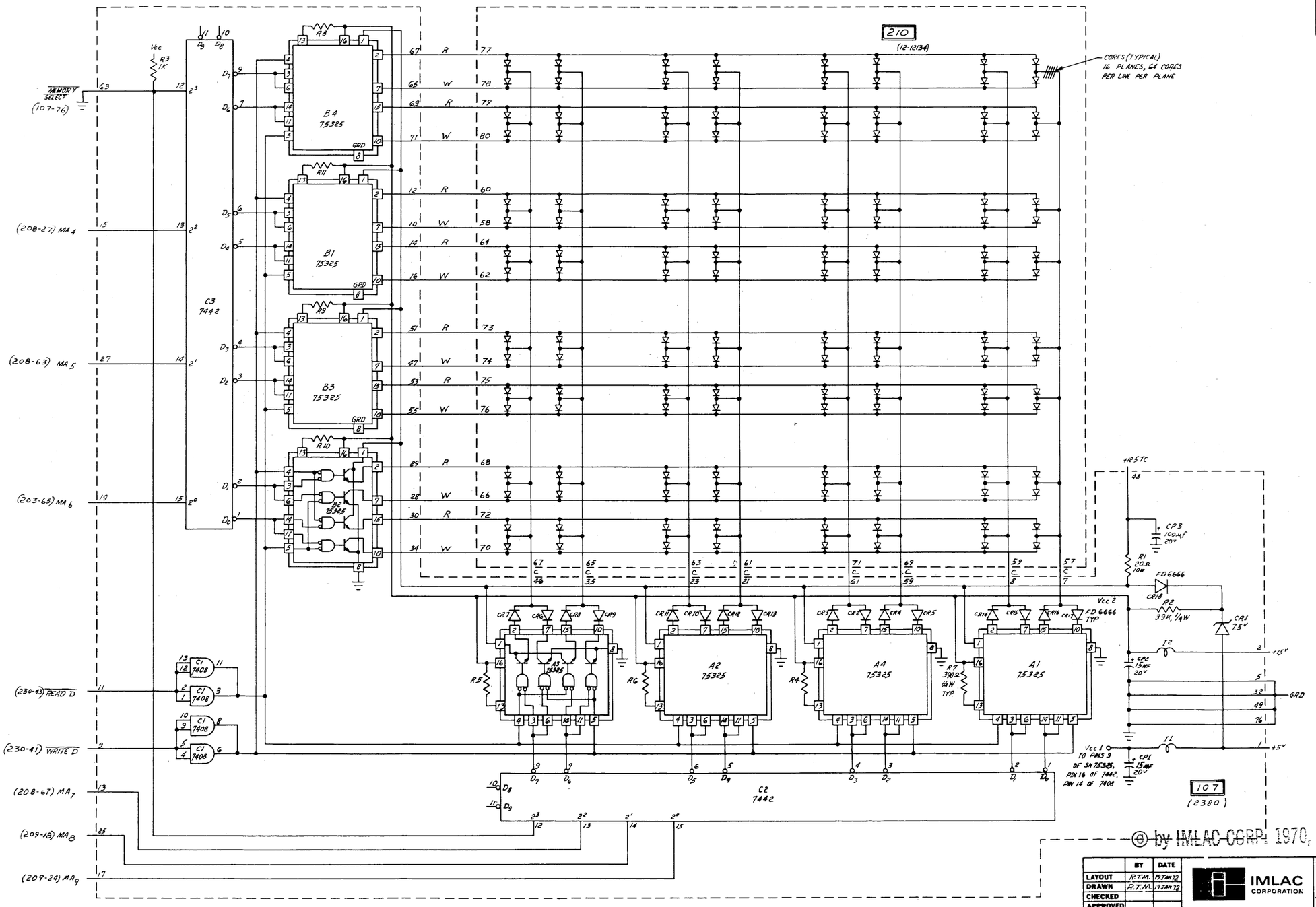

© by IMLAC CORP. 1970, 1971, 1972

	BY	DATE
LAYOUT	R.T.M.	19 Jan 72
DRAWN	R.T.M.	19 Jan 72
CHECKED		
APPROVED		
ISSUE		
COPIED		
MATERIAL		

IMLAC CORPORATION
296 NEWTON STREET
WALTHAM, MASSACHUSETTS 02154

PROJECT

TITLE
SECTION D
XADDRESS SELECTION

PREFIX	SIZE	DRAWING NUMBER	REV.
L	D	989	
Scale			Sheet

REV	ECN	DATE	DFTMN	APP'V

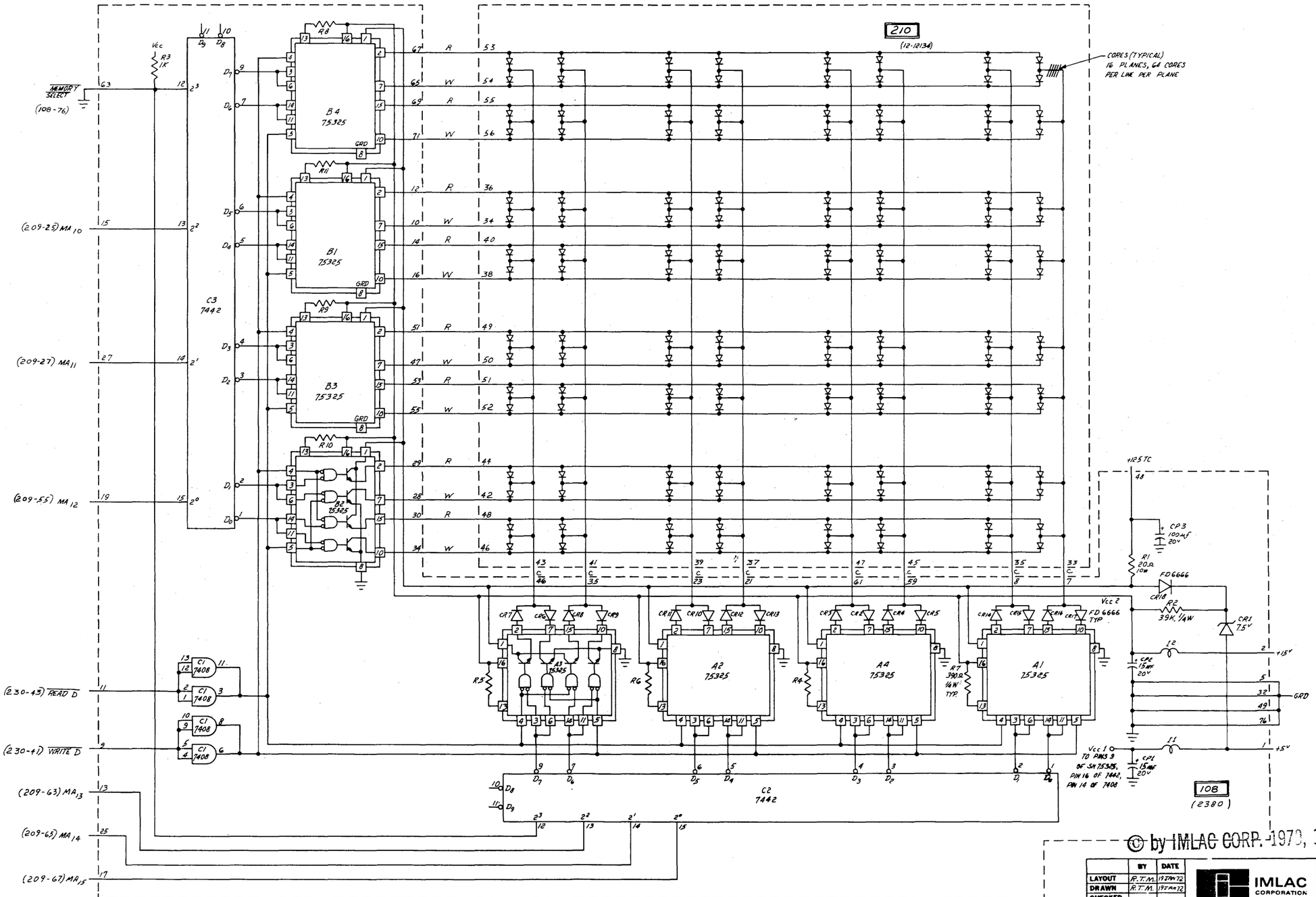

© by IMLAC CORP. 1970, 1971, 1972

	BY	DATE
LAYOUT	R.T.M.	1/27/72
DRAWN	R.T.M.	1/27/72
CHECKED		
APPROVED		
ISSUE		
COPIED		
MATERIAL		

IMLAC CORPORATION
206 NEWTON STREET
WALTHAM, MASSACHUSETTS 02154

PROJECT

TITLE
SECTION D
Y ADDRESS SELECTION

PREFIX	SIZE	DRAWING NUMBER	REV.
L	D	990	

Scale

Sheet

REV	ECN	DATE	DFTMN	APPV
A	695	10 FEB 72	H.C.M.	
B	-	11 APR 72	R.T.M.	
C	-	18 MAY 72	H.C.M.	

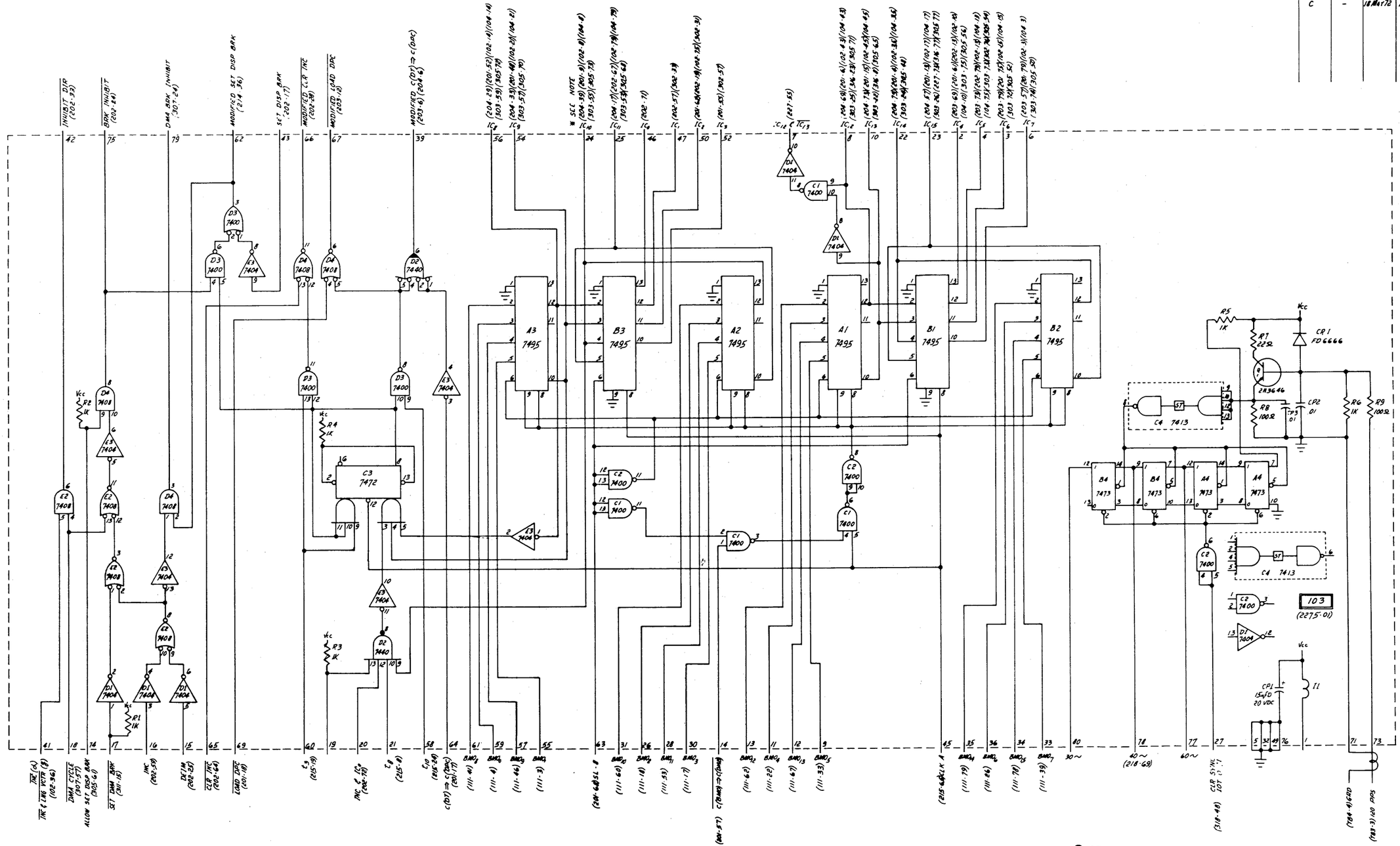

NOTES
* IC_{10} DOES NOT CONNECT TO 201-9 IF SUPPRESSED GRID CARD IS INSTALLED IN SLOT 305.

©1971

	BY	DATE
LAYOUT	H.C.M.	19 Nov 71
DRAWN	H.C.M.	24 Nov 71
CHECKED		
APPROVED		
ISSUE		
COPIED		
MATERIAL		

IMLAC CORPORATION
296 NEWTON STREET
WALTHAM MASSACHUSETTS 02154

PROJECT

TITLE
DISPLAY MEMORY BUFFER & INCREMENT CONTROL REG & 40 CYCLE SYNC. & DEIL

PREFIX	SIZE	DRAWING NUMBER	REV.
L	D	997	C

Scale

Sheet

© by IMLAC CORP. 1970, 1971, 1972

REV.	ECN	DATE	DFTM.	APP'D.
A	-	8MAY72	R.T. M.	[illegible]
B	-	15MAY72	GB	[illegible]

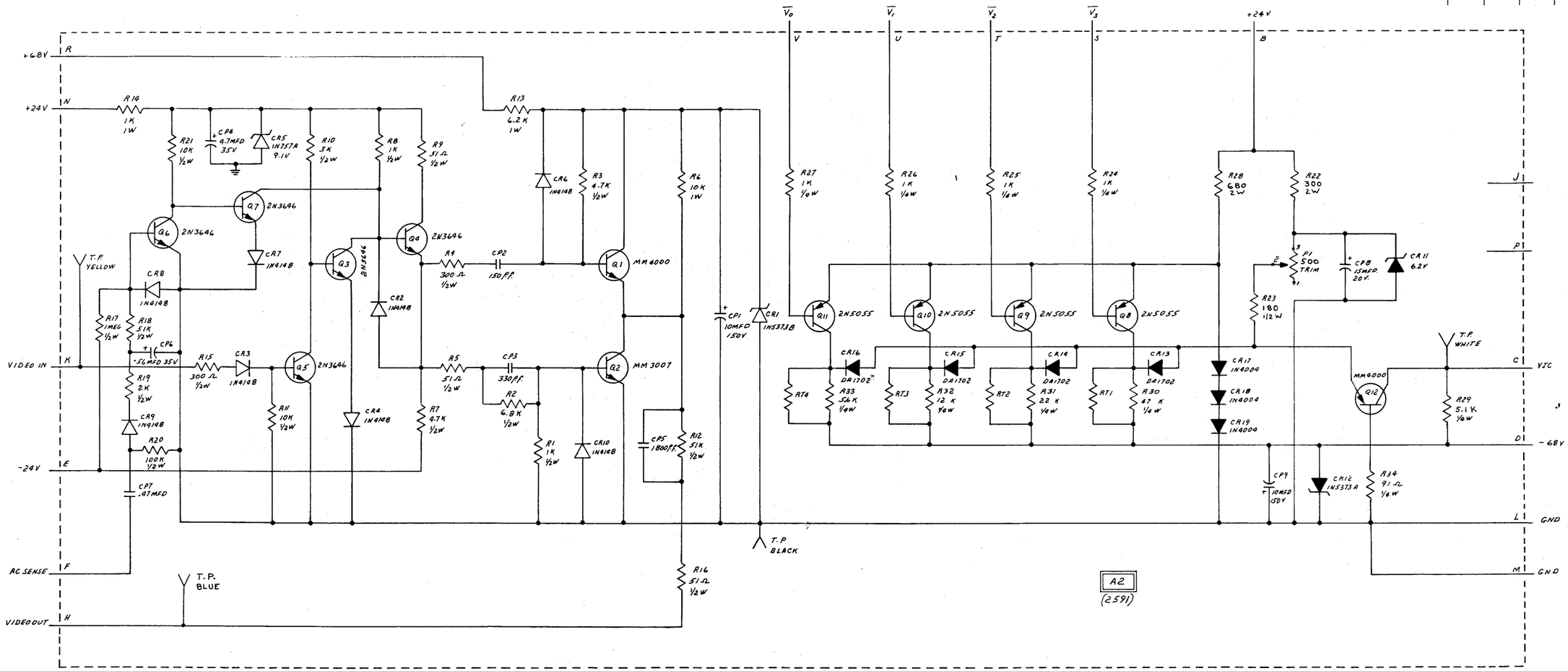

© by IMLAC CORP. 1970, 1971, 1972

	BY	DATE
LAYOUT	J.V.	2-18-72
DRAWN	J.V.	2-19-72
CHECKED		
APPROVED		
ISSUE		
COPIED		
MATERIAL		

IMLAC CORPORATION
296 NEWTON STREET
WALTHAM MASSACHUSETTS 02154

PROJECT

TITLE
VIDEO AMPLIFIER AND GREY SCALE DAC

PREFIX	SIZE	DRAWING NUMBER	REV.
L	D	998	B

Scale | Sheet