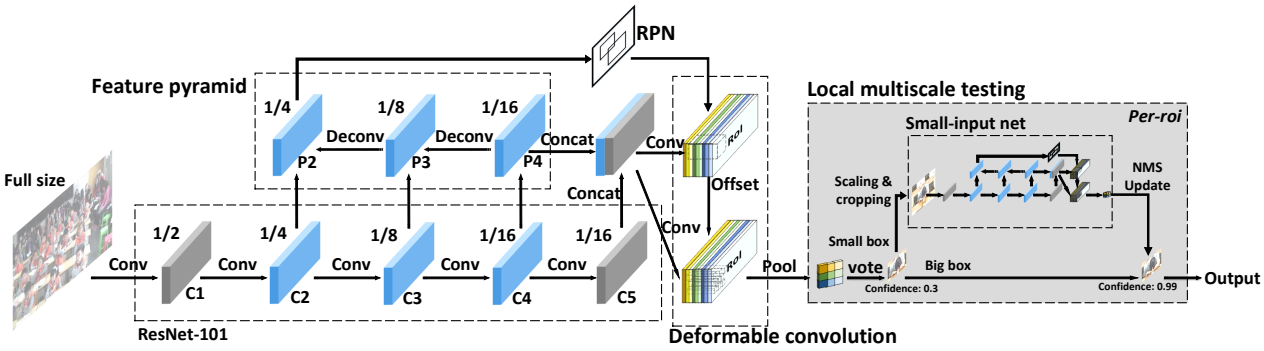

Fig. 2. **Overall structure of our approach.** A feature pyramid is built on conv2, conv3 and conv4, which is used for RPN's input. Deformable convolution is used to do deformable position sensitive ROI pooling. Local multiscale testing addresses discrimination of small targets.

bone.

Based on the above analysis, we propose a novel object-based algorithm to efficiently detect the sleep ones in real classes. First, we label the sleep gestures with bounding boxes from real class videos, and built a sleep gesture dataset. Second, we modify the R-FCN [10] detection network by employing a feature pyramid to exploit detailed features from former layers to better distinguish sleep gesture from other gestures, and using deformable convolution networks [15] method in the PSRoiPooling part to make the detection network more adaptable to various sleep gestures, then train the network on our dataset. Third, we use a local multiscale testing (LMT) algorithm to address small sleep gesture detection problem. The exprimental results on our real dataset have demonstrated the effectiveness and effciency of the proposed algorithm.

2. OUR APPROACH

In this section, we first introduce the overall architecture of the proposed algorithm for sleep gesture detection, and then explain the improvement parts utilized in the network structure. The proposed local multiscale testing strategy is presented thereafter.

2.1. Overall Architecture

The overall architecture is shown in **Fig. 2**, which can be divided into two parts, i.e., the network for sleep gesture detection and strategy of local multiscale testing. The detection network is based on R-FCN [10] object detection neural network, and ResNet-101 [16] is used to extract features. ResNet-101 [16] has 5 residual blocks, and each block is marked as {C1, C2, C3, C4, C5}. We modify the original R-FCN [10] to make our detection more precise: in region proposal network(RPN), instead of using the C4 as input, we build a feature pyramid which combines C4, C3, C2 as the RPN's input, and P4 is also concatenated with C5 to enrich the feature extraction; and the original position sensitive Roi pooling is integrated with deformable convolution network (DCN). The second part is a novel local multiscale testing algorithm to address the small sleep gesture detection problem, which is both time and memory efficient.

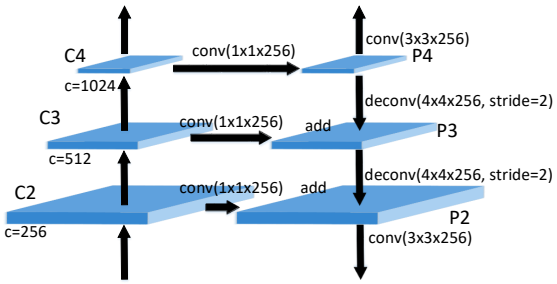

Fig. 3. **Feature pyramid structure.** Left part is 3 blocks of the ResNet [16] backbone, and right part is the feature pyramid. Here we use deconvolution instead of nearest interpolation to upsample the feature map.

2.2. Feature Pyramid

Feature pyramid has many approaches, for example, discretized image pyramid [17] and multiple feature maps [18]. Combined with multiscale detection [19], [20] proposed a feature pyramid network (FPN) for object detection and get significant performance improvement.

We want to exploit features extracted at previous layers to have more details and we build a feature pyramid shown in **Fig. 3**. Especially, different from FPN [20], we use deconvolution [20] instead of nearest neighbour or bilinear interpolation to upsample, because we think naive upsampling