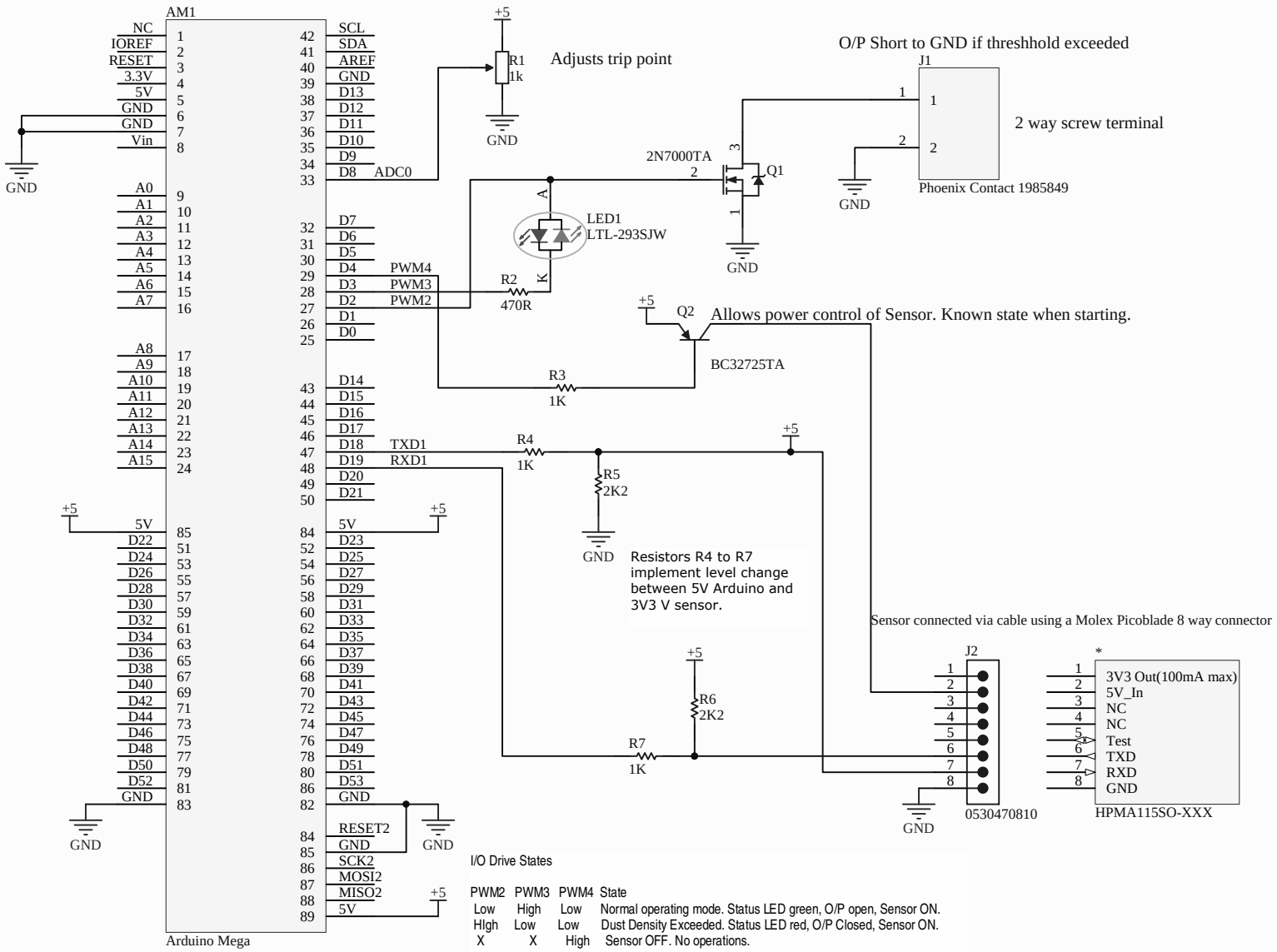

I/O Drive States

PWM2	PWM3	PWM4	State
Low	High	Low	Normal operating mode. Status LED green, O/P open, Sensor ON.
HIgh	Low	Low	Dust Density Exceeded. Status LED red, O/P Closed, Sensor ON.
X	X	High	Sensor OFF. No operations.

Powered by USB connection. Make sure USB source has a good VBUS voltage of 4.8V or more.

Title	**Jimbos Dust Sensor**	
Size A4	Number	Revision
Date: 18/05/2018	Sheet 1 of 1	
File: Dust_Sensor.SchDoc	Drawn By: **G.MOESSIS**	