TECHNISCHE UNIVERSITÄT BERLIN

Fakultät IV - Elektrotechnik und Informatik
Fachgebiet Nachrichtenübertragung

Bachelor Thesis

A Universal Standard for Prototyping Analog Circuits

Karim Nicolae Costan 411054

Reviewer: Prof. Dr.-Ing. Thomas Sikora
Second Reviewer: Prof. Dr.-Ing. Friedel Gerfers
Period: 07.05.2025 – 24.09.2025

Berlin, 24.09.2025

Postanschrift: TU Berlin, Fachgebiet Nachrichtenübertragung
Einsteinufer 17 - EN1
D-10587 Berlin

Tel.: +49 (0) 30 314 25093
E-Mail: boldin@nue.tu-berlin.de
Web: www.tu-berlin/nue

Declaration

I declare to Faculty IV, Technische Universität Berlin, that the present Bachelor Thesis was prepared independently and only using the sources and aids listed in the bibliography. The passages of the Bachelor Thesis, taken from other sources in terms of wording or meaning are identified by stating their origin. This also applies to drawings, sketches, pictorial representations and sources from the Internet. I confirm that this work or essential parts of this work have not already been published in another form.

Berlin, 24.09.2025

Karim Nicolae Costan 411054

Disclaimer

In the interest of transparency, it is important to note that the generative AI Tool ”DeepL Write” (https://www.deepl.com/de/write) was used for certain sections of the thesis. It was exclusively used to improve the language of the text and did not generate any content.

Every graphic featured in the thesis was made by me using the presented programs KiCad and LTSpice. Any photograph was taken by me too.

Abstract

The world of electrical engineering is a fundamental part of life in the 21st century. Even those unfamiliar with the topic experience its effects daily through their household appliances, phones, public infrastructure, and workplaces. However, understanding how all of this works is not common knowledge and the threshold for understanding it is high. This is known as the Digital Divide. The objective of this thesis is to enhance the accessibility to electrical engineering for the general public with the creation of a universal standard for prototyping analog circuits (USPAC). This thesis will provide a comprehensive overview of the fundamental principles of electrical engineering and their representation in the standard, along with a detailed explanation of the methods and core values employed in the creation. At the conclusion of the thesis the results of the standard are presented and it is placed in the wider context of prototyping tools, taking inspiration for future developments.

Zusammenfassung

Die Welt der Elektrotechnik ist ein fundamentaler Teil des Lebens im 21. Jahrhundert. Selbst unbewusst fühlt man den Einfluss tagtäglich durch Haushaltsgeräte, Telekommunikationsgeräte, öffentliche Infrastruktur und Arbeitsplätzen. Jedoch ist das Verständnis der Elektrotechnik noch nicht weit verbreitet und die Einstiegshürde ist hoch angesetzt. Dies ist bekannt als die digitale Kluft. Das Ziel dieser Bachelorarbeit ist Elektrotechnik verständlicher für die allgemeine Bevölkerung zu machen mit der Hilfe eines entwickelten universellen Standards für das Prototypen von analogen Schaltungen (USPAC). Es werden fundamentale Prinzipien der Elektrotechnik erläutert, so wie deren Repräsentation in dem Standard, gefolgt von einer weitreichenden Erklärung zu den verwendeten Methoden und Zielen welche die Entwicklung beeinflussten. Zum Abschluss der Bachelorarbeit werden die Resultate in der Nutzung des USPACs präsentiert und zukünftige Ansätze für weitere Entwicklungen, in Anbetracht anderer Methoden zum Prototypen elektrischer Schaltungen, vorgeschlagen.

Table of Contents

1 Introduction **5**
1.1 The three aspects of the USPAC . . . 7
1.1.1 The Aspect of Design . . . 7
1.1.2 The Aspect of Standardization . . . 7
1.1.3 The Aspect of Electrical Engineering . . . 8
1.2 Basic Knowledge of Electrical Engineering . . . 8
1.2.1 What Is Electricity . . . 8
1.2.2 Relation of Electrical Laws and Behavior of Electrical Components . . . 9
1.2.3 Difference Between Direct Current (DC) and Alternating Current (AC) Power . . . 11
1.3 Prototyping in Electrical Engineering . . . 13
1.3.1 Banana-Connector . . . 13
1.3.2 Breadboard . . . 14
1.3.3 Arduino . . . 15

2 Method **17**
2.1 Simulation with LTSpice . . . 17
2.1.1 Benefits of LTSpice . . . 17
2.1.2 Simulations and Results . . . 17
2.1.3 Limitations . . . 18
2.2 Prototyping . . . 18
2.2.1 Differences Compared to Simulations . . . 18
2.2.2 Measurement Series . . . 18
2.2.3 Soldering . . . 20
2.3 Creating Custom Printed Circuit Board (PCB)s with KiCad . . . 20
2.3.1 Designing PCBs with KiCad . . . 20
2.3.2 Etching . . . 20
2.3.3 Accomplishing a Core Value . . . 23

3 Experiment **25**
3.1 Signals Utilized by the USPAC . . . 25
3.1.1 Logic . . . 25
3.1.2 Analog signals using positive voltages . . . 25
3.1.3 Analog signals using negative voltages . . . 26

3.2 Structure of the USPAC . . . 26
3.2.1 A Standardized Connector . . . 26
3.2.2 The Operational Amplifier . . . 27
3.2.3 Overview of the Modules . . . 30
3.3 The Modules in Depth . . . 31
3.3.1 IN . . . 32
3.3.2 PROC . . . 36
3.3.3 OUT . . . 39

4 Discussion **43**
4.1 The Modules in Practice . . . 43
4.1.1 Water Level Measuring Circuit . . . 43
4.1.2 Blinking Light-Emitting Diode (LED) Circuit . . . 44
4.1.3 Atari Punk Console . . . 45
4.2 Answering Research Questions . . . 47
4.3 Limitations and Potential for Future Development . . . 47

5 Conclusion **49**

List of Acronyms

AC	Alternating Current
ADC	Analog-Digital Converter
AUX	Auxiliary
CAD	Computer-Aided Design
CEN	European Committee for Standardization
CENELEC	European Committee for Electrotechnical Standardization
DC	Direct Current
GND	Ground
IEA	International Association for the Evaluation of Educational Achievement
ISO	International Organization for Standardization
LED	Light-Emitting Diode
PCB	Printed Circuit Board
PEE	Prototyping for Electrical Engineering
SMD	Surface-Mount Device
SPICE	Simulation Program with Integrated Circuit Emphasis
THT	Through-Hole Technology
TRS	Tip Ring Sleeve
USPAC	Universal Standard for Prototyping Analog Circuits
USB	Universal Serial Bus
VCC	Positive Supply Voltage
VCO	Voltage-Controlled Oscillator

List of Figures

1.1 A RC Circuit charging during 5 seconds. At 1 second the curve reaches 3.15 V, which is exactly 63% of 5 V . . . 11
1.2 A 10 Hz Sine Wave with an Amplitude of 5 V . . . 12
1.3 An AC circuit with a Capacitor, the voltage lags behind the current by 90° . . . 12
1.4 An AC circuit with an Inductor, the current lags behind the current by 90° . . . 13
1.5 Banana connectors . . . 14
1.6 A breadboard along with an Arduino UNO . . . 15

2.1 Measurement series done on a water level sensor . . . 19
2.2 The circuit board printed on transfer paper . . . 21
2.3 PCB etching process as described in Section 2.3.2 . . . 22

3.1 3.5 mm Tip Ring Sleeve (TRS) Auxiliary (AUX) Plug . . . 27
3.2 An operational amplifier with all of its pins labeled . . . 28
3.3 A non-inverting amplifier. The input signal of 2.5 V (red) gets amplified by 2, to an output signal of 5 V (blue) . . . 29
3.4 Schematic of the Differential Amplifier . . . 30
3.5 The schematic for the button module in KiCad . . . 32
3.6 The schematic for the water level module in KiCad . . . 33
3.7 The schematic for the light sensor module in KiCad . . . 34
3.8 The schematic for the electromagnetic field detector module in KiCad . . . 35
3.9 The schematic for the variable voltage module in KiCad . . . 35
3.10 The schematic for the comparator module in KiCad . . . 36
3.11 The schematic for the AC to DC module in KiCad . . . 37
3.12 The schematic for the timer module in KiCad . . . 38
3.13 The schematic for the NAND gate module in KiCad . . . 38
3.14 The schematic for the LED module in KiCad . . . 39
3.15 The schematic for the speaker module in KiCad . . . 40
3.16 A selection of the built modules for the Universal Standard for Prototyping Analog Circuits (USPAC) . . . 41

4.1 The water level measuring circuit built using the USPAC. The modules are from left to right, top to bottom: The PWR board, using USB2.0, the variable voltage module, the water level sensor module, the comparator module and the blue LED module . . . 44

4.2 The blinking LED circuit built using the USPAC. The modules are from left to right: The PWR board, using USB2.0, the variable voltage module, the timer module and the blue LED module 45
4.3 The Atari Punk Console built using the USPAC. The modules following the cable from left to right are: The PWR board, using USB2.0, two timer circuits and one speaker module 46

1 Introduction

The field of electrical engineering has become an inextricable part of the human experience in the 21st century [1]. A study conducted in 2015 revealed that 88% of individuals in 40 countries of varying economic and developmental progress own cellphones, 43% of which are classified as smartphones. Smartphones are defined as mobile phones capable of accessing the internet and mobile applications [2]. A more thorough examination of the distribution of these devices across the countries, reveals a discernible discrepancy between the economic classes. The proportion of the population that owns smartphones is notably higher in South Korea, a country with a rich economy, where 88% own a smartphone, while over half of Ethiopia, a country deemed poor by the study is left without any cellphone at all [2]. This is part of a larger phenomenon called the digital divide, meaning unequal access and utility of internet communications technologies, based on socioeconomic factors, such as income, education, age and gender [3]. Those willing to pursue an education to understand the technology are willfully unprepared, as seen in a 2012 investigation by Chris R. Smaill et.al [4]. They have discovered that only 11% of first year electrical engineer students actually comprehended their field of study when starting out. More recently, in 2023 a survey by the International Association for the Evaluation of Educational Achievement (IEA) concluded that higher exposure to technology did not translate into higher tech literacy in children of the 8th grade [5]. With the world becoming more digitized and dependent on technology, the digital divide threatens to become continuously larger if no action is taken.

While the digital divide is commonly understood to refer to the disparity in access to internet communication technologies, with a great emphasis on access to the internet (first level digital divide) and digital literacy (second level digital divide), this thesis will focus on the electrical engineering that underlies the technology used in the 21st century by the general population. A great emphasis is placed on the education and accessibility to electrical engineering, to close the gap in education that contributes to the digital divide. For this purpose, the **U**niversal **S**tandard for **P**rototyping **A**nalog **C**ircuits" (USPAC) was developed. This is a prototyping method that makes it possible to create analog circuits, by connecting modules containing smaller circuits to each other using one cable between the modules. The conceptualization, creation and functionalities are explained in depth throughout this thesis.

The USPAC is comprised of three aspects, that collectively influence the design decisions made, in an effort to address the lack of education contributing to the digital divide. These are:

- The Aspect of Design: Designing the USPAC around easy to understand and affordable components, that encourage further learning in the field,
- The Aspect of Standardization: Making the USPAC fit in the framework proposed by standardization agencies, such as the International Organization for Standardization (ISO).

This includes definition of terms, classification of components and specification of dimensions, materials, performance, design or operations,

- The Aspect of Electrical Engineering: Allowing the USPAC to be usable in as many different fields of electrical engineering as possible. This is made possible by a large flexibility in the choosing of components, in a safe environment that allows and encourages different approaches to creating circuits.

All of these aspects are based on the core philosophy of Open Source Hardware, defined by the Open Source Hardware Association as:

> ”Open source hardware is hardware whose design is made publicly available so that anyone can study, modify, distribute, make, and sell the design or hardware based on that design. The hardware’s source, the design from which it is made, is available in the preferred format for making modifications to it. Ideally, open source hardware uses readily-available components and materials, standard processes, open infrastructure, unrestricted content, and open-source design tools to maximize the ability of individuals to make and use hardware. Open source hardware gives people the freedom to control their technology while sharing knowledge and encouraging commerce through the open exchange of designs.” [6] [7].

Open Source Hardware reportedly had a positive impact in the teaching of new fields of study, in addition it also enhanced practical skills and bolstered creativity because of the granted freedom [7] [8]. The specific reasons for the choosing of each individual aspect are further elaborated on in their according sections and their effects are recognizable in the following chapters.
Chapter 1 revolves around basics and definitions, first explaining the keywords of the title: Universal Standard, Prototyping and Analog Circuits, and afterwards going more in depth on the behavior of electricity and the laws it adheres to, with relevant electrical components that use said laws. Concluding the chapter will be a showcase of prototyping tools that are currently in use and from which inspiration was drawn from in the creation of the USPAC.
Chapter 2 is about the methodology and the tools used when designing the USPAC. Going in depth on the process of simulating, prototyping and preparing the blueprints that will make the USPAC into reality.
Chapter 3 uses the knowledge gained in Chapter 1 and the methods showcased in Chapter 2 and fully documents the USPAC. From the utilized types of signals, to the individual components making out the standard. The chapter finishes with a comprehensive documentation of every module created, intended as a reference guide when using the USPAC.
Chapter 4 discusses the results of the USPAC. Starting out by presenting circuits built from it, covering their working conditions and limitations. Afterwards the thesis returns to the topic of the digital divide, answering how the USPAC helps closing the gap of education that is part of the reason of the digital divide. At last there is a discussion on future development opportunities.

1.1 The three aspects of the USPAC

This section explains the three aspects that make out the USPAC. These are fundamental in every decision made during the creation of the USPAC and are closely intertwined with each other. By design, they serve the purpose that gave the USPAC its name, creating a universal standard for prototyping analog circuits.
To become a universal standard, the standard needs to be applicable to all usage cases in electrical engineering. This is a high task, which is impossible to be realistically achieved in this thesis. Regardless, the USPAC is designed with this goal in mind, thus strives to be as close as possible to that goal. Prototyping describes the practice of testing a circuit before creating a permanent iteration, assembling it in a form that does function, but is also able to be modified at all times. The tools and methods employed are further elaborated later in the chapter. Analog Circuits are circuits that use analog signals, meaning signals that are continuous instead of fluctuation between two states. The latter would be digital signals, with most often employed with the assistance of a computer. This component will not be featured as part of the USPAC.

1.1.1 The Aspect of Design

When designing the USPAC the results of Lambricht et. al. [9] ”Survey and Taxonomy of Electronics Toolkits for Interactive and Ubiquitous Device Prototyping” were regarded highly. The survey concluded that the most important characteristics, for electrical engineers as well as participants from other disciplines, are iteration and debugging of their circuits. Iteration describes the practice of evolving prototypes, either by switching out specific components or adding more to the already existing circuit. Debugging describes the ease to analyze problematic areas of the prototype which do not yield the expected result. Both of these characteristics are heavily focused on in the aspect of design, in addition to making the components affordable and easy to replicate, a characteristic preferred by the participants from other disciplines in the survey [9]. The design decisions that make these characteristics possible are shown in Chapter 3.

1.1.2 The Aspect of Standardization

To ease proper iteration, debugging and replicating of circuits created using the USPAC, a complete documentation and especially standardization of components is needed. This necessity is in line with the philosophy of open source hardware, as mentioned in the introduction. Standardization describes the practice of implementing a technical standard, which is a document that provides ”requirements, specifications, guidelines or characteristics that can be used consistently to ensure that materials, products, processes and services are safe to use and fit for their purpose.” [10]. This document is designed to be used as a rule, guideline or definition according to the European Committee for Standardization (CEN) and the European Committee for Electrotechnical Standardization (CENELEC) [11]. The goal of the aspect of standardization is to define the terms, classify the components and materials used and asses the performance of the USPAC, conforming

to the goals of standardization proposed by the ISO. However this does not include becoming an official standard yet. This thesis orients itself on these requirements, but does not intend to fulfill each one of them, nor to get certified. While not part of the scope of this thesis, it was deemed necessary to lay the foundation, so that future works can adapt to the already fulfilled rules of standardization.

1.1.3 The Aspect of Electrical Engineering

To close the gap in education contributing to the digital divide, the USPAC was designed so it may encompass as many fields of electrical engineering as possible. This allows users to have a rich diversity in topics when using the USPAC, encouraged by creating a safe environment for trying different components. Circuits using the standard are being provided a safe voltage that allows a wide range of components to be used, but leaving no room for potential damage to the circuit, even in the case of connecting modules incorrectly. Each component utilized in a module was subjected to assessment testing, determining requirements and range of outputs. The results of these tests, shape the foundation of the design of the module. Both the methodology of testing and designing is further explained in Chapter 2.

1.2 Basic Knowledge of Electrical Engineering

To understand how the USPAC and Prototyping for Electrical Engineering (PEE) works, a certain basic knowledge of electrical engineering is highly needed. This section explains the concept of electricity, the laws that it is bound by and the different types of electricity used in electrical circuits, and by extension also the USPAC.

1.2.1 What Is Electricity

Electricity is the movement of electrons, small negatively charged particles that travel between one point and another and in their movement create power to harness. There are two fundamental components that describe the movement and amount of electrons in a circuit: voltage (V) and current (I), both are interdependent and able to influence each other.

Voltage denounces the electric potential between two points. It is measured in volt (V). Thus if the voltage between two points is zero volts there is no difference in their potential, the electrons do not travel.
In a circuit, the required voltage for an electrical component is subtracted from the provided voltage source, with any leftover voltage being applied directly to the components holding the circuit together, these being cables or electrical traces. Therefore the sum of all voltages in a circuit equate to zero. This is the second rule of Kirchhoffs Law [12].

$$\sum_{i=1}^{n} V_i = 0$$

Current represents the amount of electrons traveling. It is measured in ampere (A). As with voltage, if there is zero ampere flowing through a components, there are no electrons to flow, no matter how high the voltage is.
Every current added together at a node equates to zero. Unlike voltage, this ignores the overarching loop where the node is placed in. Thus if a current enters a node with more than one exit, the current is split into smaller currents, each according to the needs of the connected components at each end. This is the first rule of Kirchhoffs Law [12].

$$\sum_{i=1}^{n} I_i = 0$$

Whilst voltage is an overarching factor, applied to every component of the circuit according to the specification of the power supply, the current is a result of said voltage and the resistance present in the circuit. This relationship will be further elaborated in the following section.

1.2.2 Relation of Electrical Laws and Behavior of Electrical Components

This section will examine the relationship between electrical laws and the electrical components that influence them. To provide a practical illustration, a foundational electrical engineering example is used. Making a Light-Emitting Diode (LED) glow with a constant voltage.

Resistance

It is now established that both the voltage, as well as the current need to be present for electricity to work properly. Those two units have a mathematical relationship between them too, called Ohms Law.

$$R = \frac{V}{I}$$

The R denounces the resistance of a circuit. This threefold relationship behaves like a scale, balancing each factor. If resistance in a circuit goes up and voltage remains the same, current in turn decreases.
It is important to be aware of these factors when prototyping circuits. Usually the novice electrical engineer does not have access to a variable power source to regulate current and voltage, thus using different resistors circumvents the issue of too much power on certain components.
Coming back to the example circuit mentioned in the introduction of this section: The basic red LED delivered by KINGBRIGHT, used for modules of the USPAC, is classified to use a maximum of 25 mA at 2 V [13]. Thus the correct resistor must be chosen, to avoid burning out the LED due

to exceeding the maximum rated voltage. The following formula is used to calculate this:

$$R = \frac{V_s - V_f}{I_f}$$

The voltage provided by the power supply (V_s) is subtracted by the Voltage used for the LED (V_f), divided by the current needed by the LED (I_f).

$$R = \frac{5V - 2.0V}{25mA}$$
$$R = 120\Omega$$

If a 120 Ω resistor were to be used in the circuit, the LED would work properly at the designed brightness. It must be acknowledged that deviations and discrepancies are inevitable during the process of constructing electrical circuits, thus a resistance of 120 Ω represents only an ideal case. Usually a higher resistance is chosen, accounting for deviations and tolerances of the resistor and to not strain the LED at maximum capacity, extending the lifespan of the LED.

Capacitance

Capacitance is the ability to store electric charge in an object. The electrical component that is used intentionally for this effect is the capacitor (C), whereas the capacitance is measured in Farad (F). Farad is described by the charge transferred through the surface of the component (Q) divided by the voltage of the circuit. Capacitance itself can occur naturally in a circuit, but for the purposes of this thesis this is to be ignored.

$$Q = C * V$$
$$C = \frac{Q}{V}$$

In a circuit using a constant voltage, capacitance from a capacitor allows charge to still be present for period of time in the circuit after the power has turned off. This electrical energy is stored in an electrical field within the capacitor. Returning to the LED example: now that the protective resistor is in place, to add a fading effect, when the circuit is powered on or powered off, a RC-Circuit is utilized. It is a combination of the previously established resistor and a capacitor connected in parallel. The resistor controls the current, like for the LED, while the capacitor is charging. The time required to charge the capacitor to 63% is the product of the values of the resistor and capacitor. This is an logarithmic function, thus a capacitor will never be fully charged, as seen in Fig. 1.1. The most used reference value for a fully charged capacitor is at 99.3%, the time needed to charge a capacitor to 63% multiplied by 5. This is denoted as τ.

$$\tau = RC$$

$$1\tau = 63\%$$

$$5\tau = 99.3\%$$

Once the source of electrical energy is turned off, the capacitor discharges, smoothing out the abrupt change in voltage.

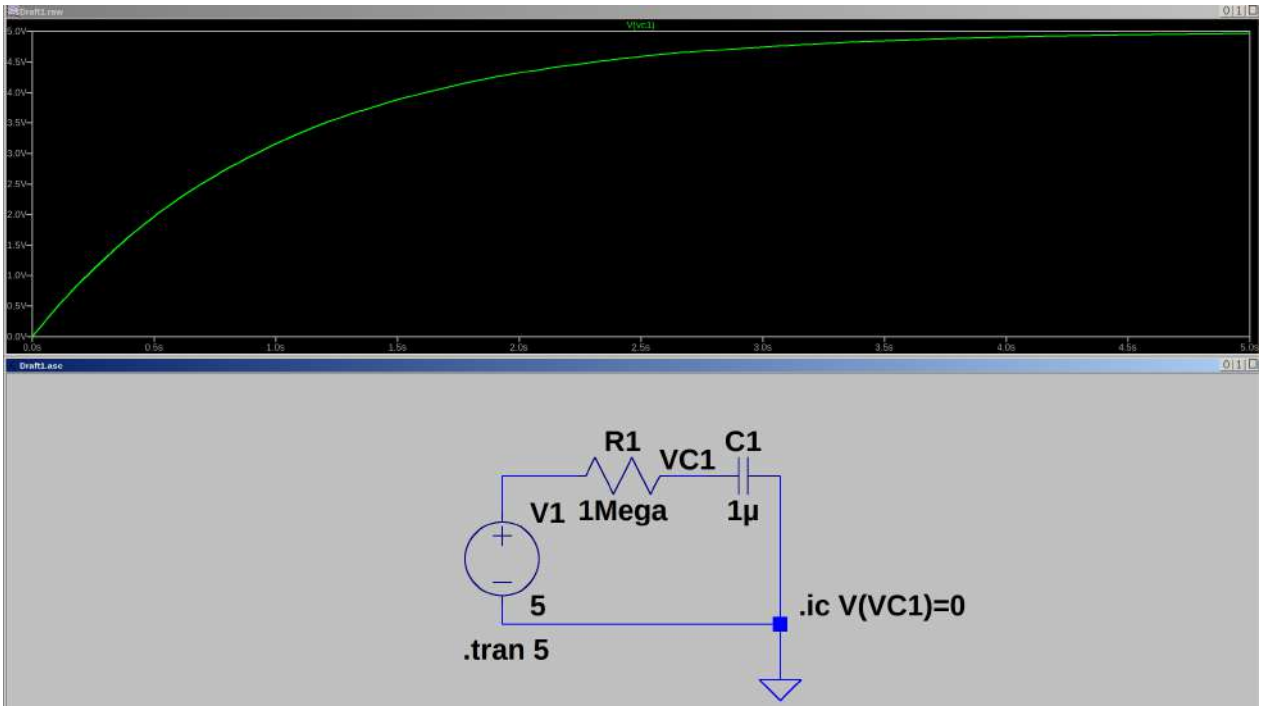

Figure 1.1: A RC Circuit charging during 5 seconds. At 1 second the curve reaches 3.15 V, which is exactly 63% of 5 V

Inductance

Inductance is the ability to oppose a change in current flowing through it. The electrical component that is used for this effect is the inductor (L), measured in Henry (H). Unlike capacitance, inductance does not interact with the voltage, instead affecting exclusively the current. Like the capacitor, the inductor is able to store electrical charge. It does this by creating a magnetic field with the energy accumulated from the current passing through the component.

1.2.3 Difference Between DC and AC Power

Up until now this thesis only focused on electrical components working with a static current, where both voltage and current are set to a certain value and never change. This is known as DC. Another type of power is Alternating Current (AC) where the voltage changes consistently in the same pattern during a certain period of time. These can be expressed in a varieties of patterns. The most commonly known pattern is the sine wave, as shown in Fig. 1.2. AC signals are used in a variety of ways, this includes powering household appliances, transmitting data and most importantly for the purposes of the USPAC, used for sound.
Capacitors and inductors gain a different purpose when used in AC circuits. The capacitor with its ability to charge voltage, delays said voltage by one quarter of a pulse, introducing a 90° phase difference between it and the current. The inductor behaves the same way, but with the current instead of the voltage. These phase differences can be seen in Fig. 1.3 and Fig. 1.4.

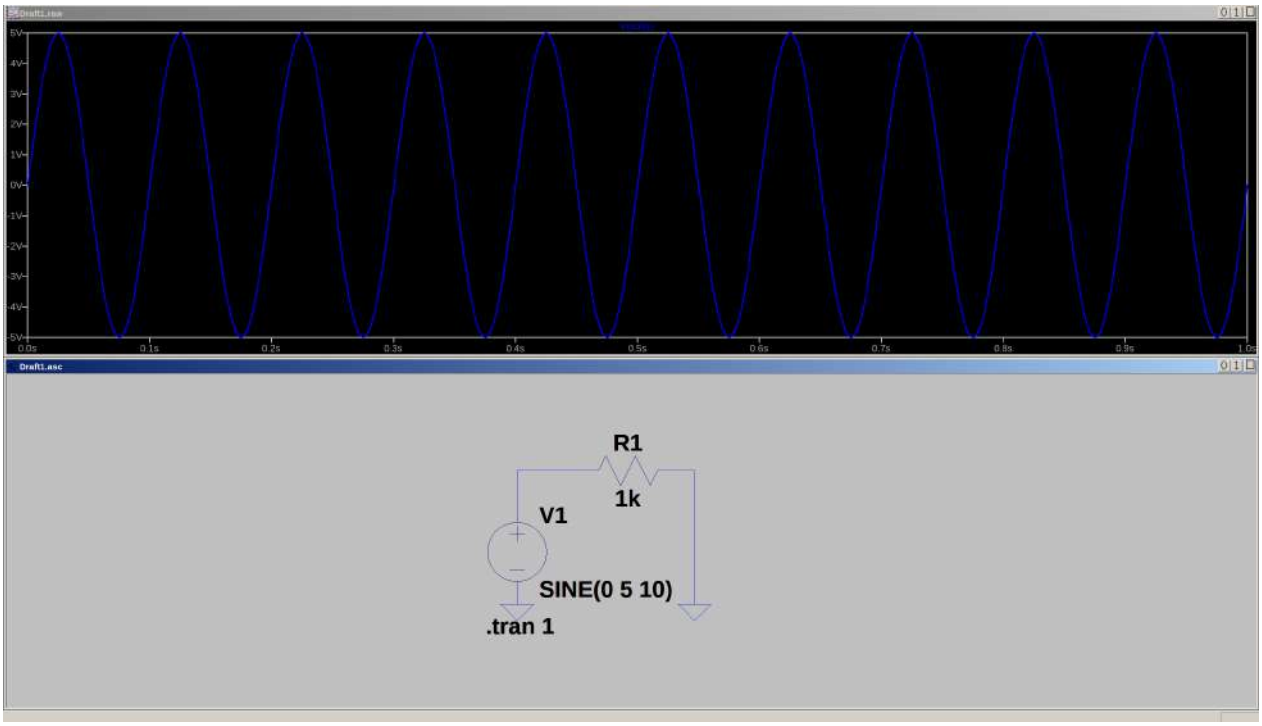

Figure 1.2: A 10 Hz Sine Wave with an Amplitude of 5 V

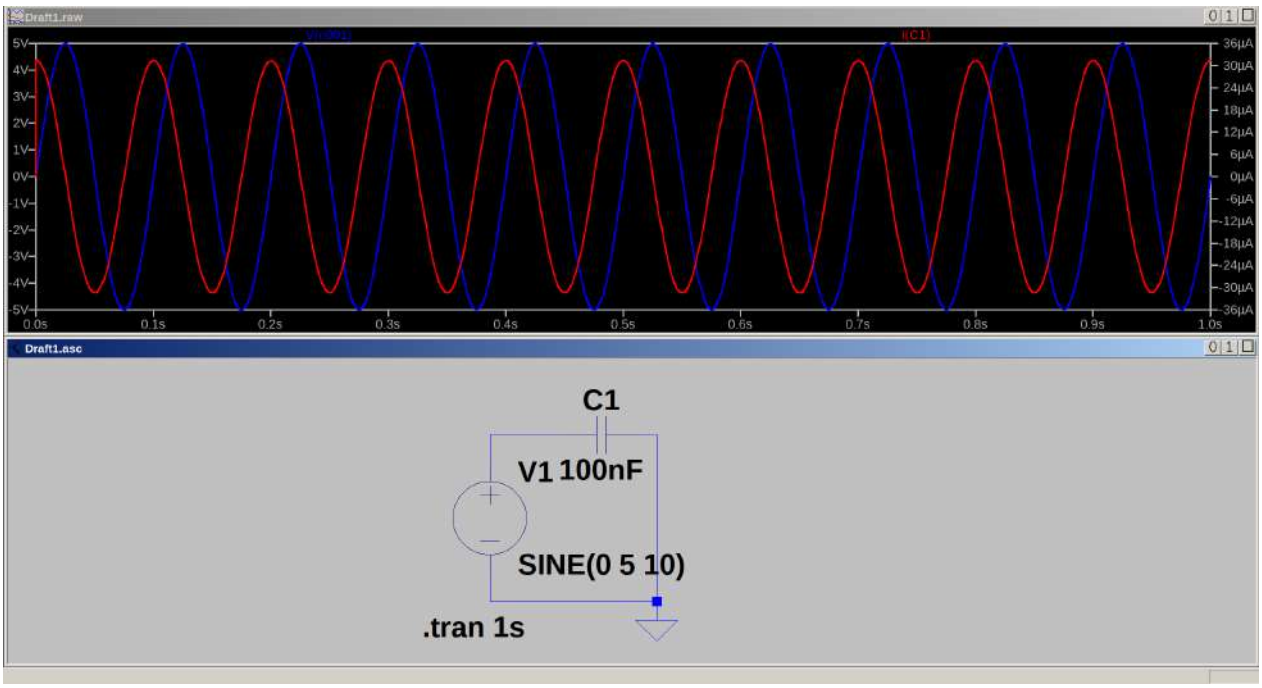

Figure 1.3: An AC circuit with a Capacitor, the voltage lags behind the current by 90°

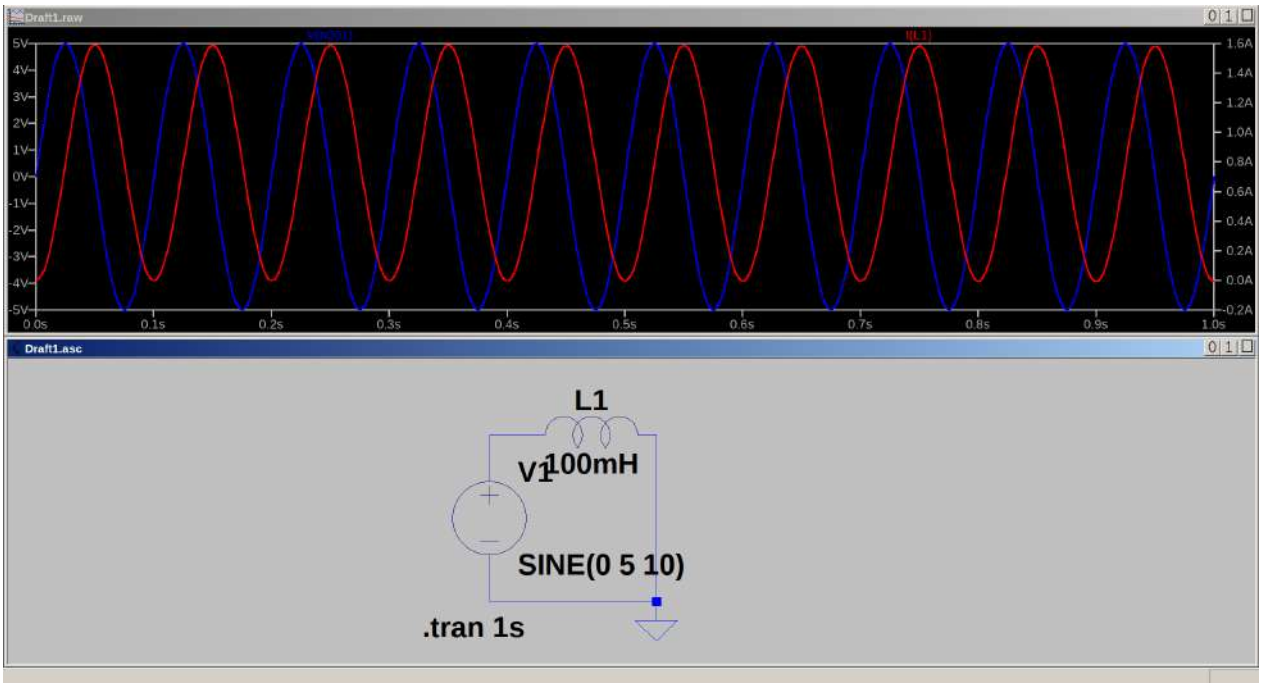

Figure 1.4: An AC circuit with an Inductor, the current lags behind the current by 90°

1.3 Prototyping in Electrical Engineering

Prototyping for Electrical Engineering (PEE) is the method to test simulated circuits in real life environments, factoring in temperature, component specific limitations and external influences, like magnetic fields into their usage. The tools used for PEE are built in a way that allows them to be easily disassembled or have specific components replaced. This is useful when modifying the environmental factors or replacing components to be more suitable for the usage. This chapter will present these tools and their roles in PEE.

1.3.1 Banana-Connector

Banana Connectors are well known to everyone using any kind of laboratory equipment for electrical engineering. They are segregated into plugs (male) and sockets (female) and typically come in either 4 mm or 2 mm sizes, rated for 30 V at 15 A. They are the standard connector for most laboratory equipment like oscillators and black boxes which already contain tested circuits for specific purposes [14]. An image of a standard 4 mm banana plug cable can be seen in Fig. 1.5a as well as the banana sockets on a power supply in Fig. 1.5b.
The primary benefit is consistency and simplicity. It offers a similar one cable-solution as the USPAC, but it lacks severely in flexibility. The types of circuits that use Banana connectors are usually already finished projects and therefore discourage further modifications. The user can only modify the environment the circuit is tested in, not the specific components of the circuits. This makes it difficult for someone not well versed in the material to understand what specifically they are working with, only the intended result.

(a) Banana plugs

(b) Banana sockets

Figure 1.5: Banana connectors

1.3.2 Breadboard

The breadboard is among the most popular tools for PEE [9]. It consists of a board with a matrix of holes, all connected in columns to each other, conducting electricity. Occasionally they feature two rows on each side, connected horizontally, designated for the Positive Supply Voltage (VCC) and Ground (GND).

To prototype a circuit on a breadboard, each of the required components ends must be placed vertically with the components they need to be connected to on the board. Measurement tools like a voltmeter or ampere meter can be easily added to the circuit to any of the free holes. If there are not any free holes left, the board can be extended by additional boards. For structuring it is even encouraged to subdivide circuits to smaller breadboards.

This tool offers great flexibility for PEE, every single electrical component is easily accessible as well as replaceable and the form offers an approximation of the final look of the circuit. However, this is also one of the biggest drawbacks. A novice electrical engineer might be overwhelmed by the sheer size of available components, each with their specific attributes to consider. For example picking the exact size of a resistor to power an LED, which has to be in accordance to the voltage provided to the circuit. Overall, this can lead to either broken, malfunctioning or incorrectly used

components, resulting from the amount of mistakes possible at this level of flexibility. This can be reduced by proper education, but mistakes can happen regardless. Despite the drawbacks, this low level approach to every single component furthers education, making the breadboard, despite the huge amount of mistake possibilities, a beneficial source of practical knowledge for PEE. The breadboard, along with the Arduino presented in the following section are shown in Fig. 1.6

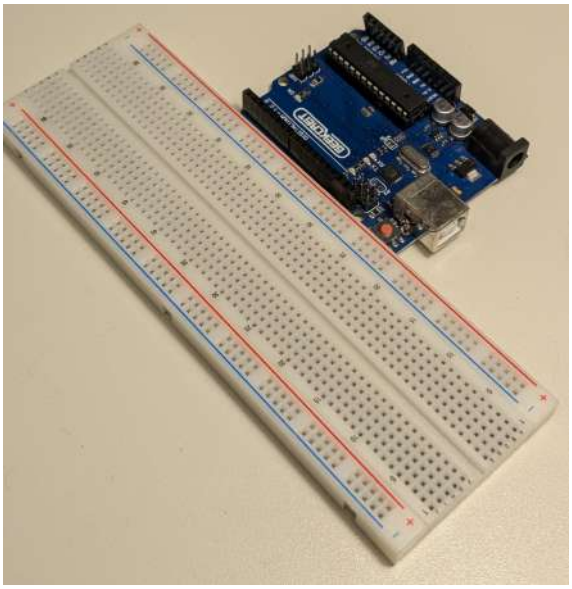

Figure 1.6: A breadboard along with an Arduino UNO

1.3.3 Arduino

Arduino is an open source single board microcontroller used for PEE, but also permanent installations. Released by a company under the same name, the Arduino microcontrollers come in many variations, all usable on breadboards. They add a digital component to a circuit by being able to be programmed to either input or output signals via the connectors on the board. This makes it possible to get a numerical read on sensor data, or make an LED blink in specific intervals without the need of a timer circuit.
As was the case with the previous tools, this also provides unique benefits as well as difficulties. The flexibility of the breadboard, since it is in use here, is still present, with the added bonus of even more capabilities to a circuit, thanks to the digital integration. But this requires the user to have knowledge in programming on top of the knowledge of electrical engineering.
There are derivatives of Arduino to alleviate the amount of knowledge required to use them properly. One of them is the "Seeeduino" with their "Grove Standard". Instead of using individual wires for every specific signal and power connections, they utilize a 4-pin connector which connects the Seeeduino directly to every component, often times sensors. This in turn limits the flexibility and amount of components connected to the Seeeduino, while also removing the need of any expertise in electrical engineering.

2 Method

This chapter showcases the tools and programs used during the conceptualization and development of the USPAC. A clear documentation of the these steps is necessary to ease understanding of the USPAC as well as enable replication and further development. Starting out with testing the desired circuits in a simulation program, to create a perspective on the desired results. Afterwards putting these simulations into practice by temporarily building the circuits as describes in the previous chapter. At the same time measuring the results of the prototypes and comparing them to the desired simulated results. Concluding the chapter is a showcase of the method used to create the modules of the USPAC, using the results of the previous two steps.

2.1 Simulation with LTSpice

LTSpice is a Simulation Program with Integrated Circuit Emphasis (SPICE) developed in 1999 by the companies Linear Technology and Analog Devices. It allows its users to test electronic circuits digitally without having the components physically. It is officially supported for macOS and Windows, but allows usage on Linux via the emulating program wine [15].

2.1.1 Benefits of LTSpice

The decision to use LTSpice was founded in one of the core values presented in the earlier section: That access to education of electrical engineering should be as easy as possible. LTSpice is free and open source, in addition there is a wide selection of additional libraries and extensions on the internet, used to improve and expand the use of LTSpice. Being developed officially for the most commonly used operating systems on Desktop, Windows and macOS [15], was an important factor too.
There are other simulation programs available, but with significant drawbacks that LTSpice remedies. They are either dependent on a stable internet connection, like CircuitLab [16], or do not offer the complexity required for precise simulations, like Falstad [17].

2.1.2 Simulations and Results

Every module featured in the USPAC has been simulated thoroughly using LTSpice. This granted a general understanding on how the circuits are supposed to behave depending on the components and their dimensions used. DC circuits have been simulated with the use of the ”DC Sweep”

function, iterating from one voltage to another in a certain timeframe. This ensured that the modules are working properly within the set voltage frame of the standard. Modules utilizing AC however were tested with static values. LTSpice provides the function to analyze a range of frequencies, for the three AC modules developed thus far an analysis of their frequency response was not deemed necessary in regards of their function within the USPAC.

2.1.3 Limitations

Simulation, while being a useful tool for gauging the intended result of a circuit, has severe limitations that are remedied under testing during the prototyping step of development. Without further modifications simulations do not have the capabilities to test external factors usually occurring when circuits are used outside of simulations. This includes ideal working temperatures, important for resistors since their resistance increases with higher temperatures. In addition, general limits to components are disregarded too. An LED will never burn out in a simulation, nor is it possible calculate the precise brightness of the LED in the simulation program. At this point a real implementation is needed in the form of prototyping, explained in the following chapter.

2.2 Prototyping

As explained in the introduction, Prototyping for Electrical Engineering (PEE) is the method to test simulated circuits in real life environments, factoring in temperature, component specific limitations and external influences, like magnetic fields into their usage. Every module created for the USPAC was prototyped on a breadboard and subjected to testing, assessing how the modules behave under a real environment and modifying the modules accordingly. These steps and the reasons they were taken are described in this chapter.

2.2.1 Differences Compared to Simulations

It is difficult to test for real life factors when simulating via a program like LTSpice. Things like external temperatures, component specific abnormalities or interference from surrounding electromagnetic fields are not regarded, making it deviate from reality for most usage cases. It is however despite these shortcomings beneficial to simulate the circuit first, to get an idea how the circuit is supposed to behave under ideal circumstances, then follow up with the prototyping.

2.2.2 Measurement Series

To create awareness of the aforementioned external factors, a measurement series was done on the components used in the prototyping step of the USPAC. A measurement series involves the precise assessment of a set of values under ideally identical circumstances, to gauge the influences of external uncontrolled factors and their effect on the recorded measurement. In the context of

this thesis, it would be using the same sensor in the same circuit several times, noting down every value and calculating the average out of all of them, to assess a minimum and maximum value of the tested sensor. The values of every sensor were measured under no influence, for example leaving the water level sensor completely dry and out of the water, and under the maximum possible influence, submerging the sensor completely in water, 20 times per value. Using the arithmetic mean, an individual maximum and minimum value for every sensor was determined. This will be used for calculations for the rest of the thesis and will be presented in their respective sections. The first prototype of the upcoming water level sensor module is seen in Fig. 2.1. It shows the circuit built on a breadboard, attached to a voltmeter to asses the range of voltages emitted by the sensor.

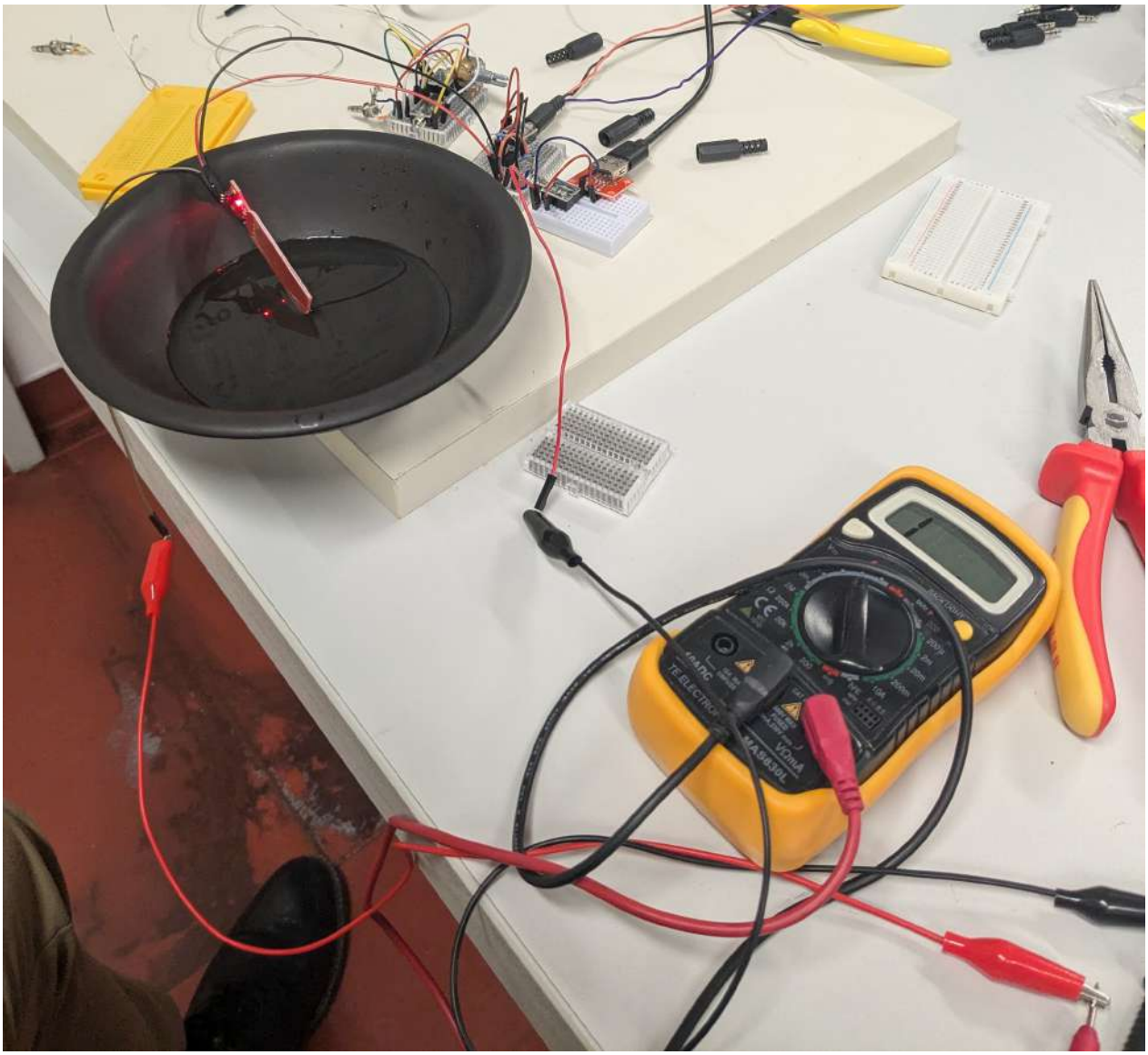

Figure 2.1: Measurement series done on a water level sensor

2.2.3 Soldering

Modules in the USPAC are connected via a 3-pin TRS AUX connector. To test these and conduct a successful measurement series from the endpoint of the AUX cable exiting the module, wires were soldered on the pins of the AUX connector. This made it possible for the AUX connector to be connected to a breadboard.

2.3 Creating Custom PCBs with KiCad

After simulating and prototyping the circuit, the next step is to implement a permanent version. This can be done by creating a PCB with the help of a Computer-Aided Design (CAD) program, like KiCad. Created in 1992 by Jean Pierre Charras, KiCad is a free open source software suite for electronic design automation. It is capable of creating and simulating circuits, as well as creating the manufacturing files to translate these circuits onto circuit boards. It is supported for Windows, macOS and Linux and is still getting updates to this day [18].

2.3.1 Designing PCBs with KiCad

This step of the process begins by choosing the style of soldering: either Through-Hole Technology (THT) or Surface-Mount Device (SMD). The USPAC utilizes exclusively THT components, because they offer a greater visual clarity of the components used, compared to SMD. After measuring the size of the components used in the prototyping step, representations of the component called footprints were allocated to every used symbol in the schematic, carefully picking the correct sizes and soldering style. A printed PCB is only conductive on one side board, thus it is important to place the components and their connections in a manner that prevents them from crossing each other. The recommended sizes for traces on DIY-etched PCBs is 1 millimeter, factoring in printer resolutions and mistakes when creating the PCB later. The rest of the PCB remains conductive and is utilized as the reference point for GND, therefore every component connected to GND needs to be on the same plane, with traces not sectioning off parts of GND. In situations where this is impossible, or traces need to be crossed, a small separate wire is used to bridge these connections. In the design process this was to be avoided, to reduce labor in the creation of modules for the USPAC.

2.3.2 Etching

Etching involves the process of using strong acid or mordant solutions to cut into an unprotected metallic surface. In the case of PCB creation these cuts are made where the conductive traces get separated from the rest of the circuit board. This in turn allows a simple copper board to be a network of different lanes for electronic signals and power traces. This section will explain how the etching process is done and how this method contributes to the goals of open source hardware.

The methods for the creation of self etched PCB was inspired by the paper ”A low-cost printed circuit board design technique and processes using ferric chloride solution” by the University of Nigeria [19] with modifications to the process.
After creating the PCB in KiCad the next step is to print the layout of the traces on transfer paper, as shown in Fig. 2.2. This paper reacts to heat and releases the ink from the paper to the underlying surface. This can be done with a clothing iron, transferring the ink from the paper to the copper board, with everything exposed becoming unable to conduct electricity after the process is done. Ideally the setup of the transfer process should look like Fig. 2.3a, with the copper plate taped on a smooth surface for stability.

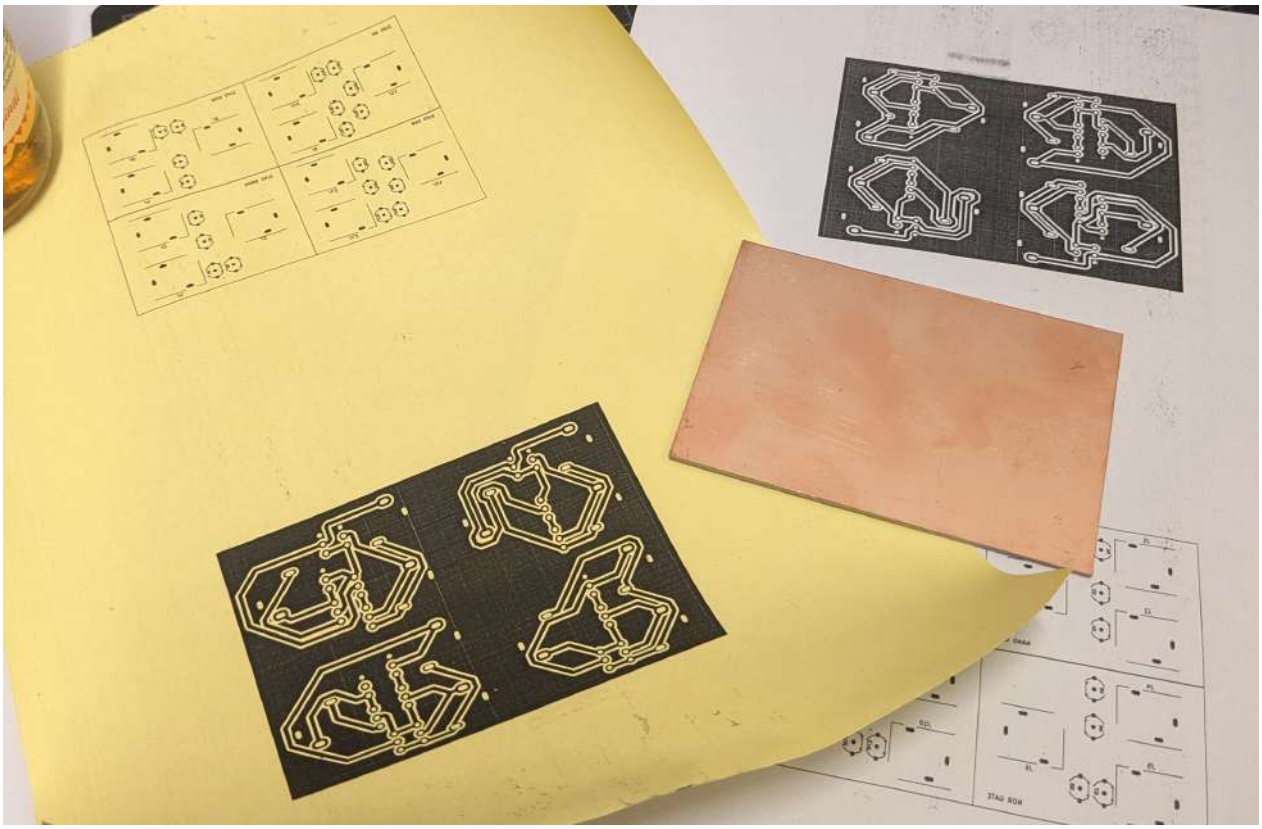

Figure 2.2: The circuit board printed on transfer paper

Once the transfer process is completed as seen in Fig. 2.3b, the copper plate gets submerged into the ferric chloride solution Iron(III) chloride, visible in Fig. 2.3c. This creates a chemical reaction, coating the surface of every unprinted surface with Iron(II) Chloride and Copper(II) Chloride. The latter can be washed away with water, however the first is stuck to the surface, making the affected portions unable to conduct electricity.
The remaining ink gets sanded off with sandpaper, leaving every conductive part of the PCB shiny, while the traces are sectioned off by the Iron(II) chloride. The final result can be seen in Fig. 2.3d.

(a) Heat transfer

(b) Transferred traces

(c) Submerged in iron(III) chloride

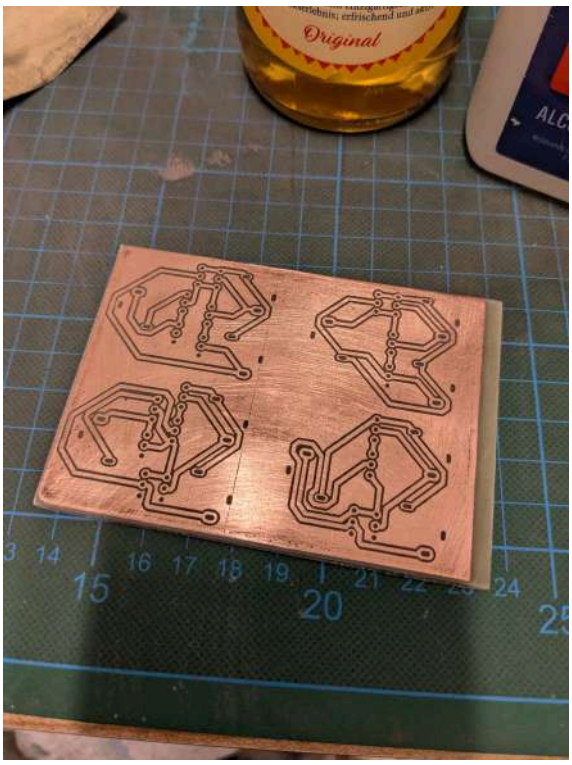

(d) Post-etching

Figure 2.3: PCB etching process as described in Section 2.3.2

An additional step for clarity is transferring the silkscreen on the other side of the PCB, making it clear where to place which components for soldering later. This also happens by the same heat transferring procedure as the traces, but now on already etched copper. With the help of a standing drill, holes are drilled for the electrical components to be placed in, ready to be soldered in at last.

2.3.3 Accomplishing a Core Value

The reason the modules of the USPAC are realized on self etched PCBs, is to adhere to the goals of open source hardware. This method showcases that everyone can make usable circuit boards by themselves, with appliances sold on most online marketplaces as well as hardware stores. The method is also very cost effective and grants an immediate reward, cutting the need of expensive and slow shipping. Most importantly, it creates an easy starting point for people trying to modify or expand the standard. If a certain module is lacking for the needs of the user, they can create it easily for themselves, while also maintaining internal consistency across other modules.

3 Experiment

Chapter 3 puts into practice the knowledge learned in Chapter 1 and the methods established in Chapter 2. At first explaining the types of signals utilized in the USPAC: a replication of logic signals to give a basic understanding of digital logic, without deviating from the purpose of prototyping analog circuits; continuous positive analog signals, with a range between 0 V and 5 V, usually utilized by sensors and analog signals utilizing positive and negative voltages. This is followed up by an explanation of the key components that make the USPAC usable: a standardized connector that makes the modules interact with each other and an operational amplifier that allows the communication between modules to occur in the same scale of voltages, unifying their maximum voltages depending on their type of utilized signal. At the end of the chapter is a full documentation of every module of the USPAC currently created for the purposes of this thesis.

3.1 Signals Utilized by the USPAC

This section presents the different types of analog signals used by the USPAC. These are limited to: Logic Signals, Analog Signals using exclusively positive voltages and signals using negative and positive voltages. This selection of signals is used in a majority of circuits and it is imperative to explain each type separately for a proper understanding of the upcoming modules of the standard.

3.1.1 Logic

Logic signals are usually used for digital circuits, since digital devices communicate exclusively with two states: ON (1) or OFF (0). In the USPAC this behavior is replicated by having certain circuits react exclusively to either ON (5 V) or OFF (0 V). These circuits in question are logic gates, circuits that perform boolean operations on input signals. For example two signals x and y, both set to ON (5 V) would output 5 V on an AND gate and 0 V on a NAND (not-AND) gate. There are other variations of gates, which are OR, where one or both have to be 5 V for it to output 5 V ; XOR, which exclusively checks if only one of the inputs is 5 V to output 5 V; and their inverse variants, denounced by an N in front of the name (NOR, XNOR).

3.1.2 Analog signals using positive voltages

Unlike the logic signals from the previous section, these values are in a range between 0 V and 5 V, instead of only ON (0 V) or OFF (5 V). These signals are usually emitted by sensors that are

designed for measuring certain amounts. For example a moisture sensor measuring the humidity of the soil it is placed in. But this can also mean intentional voltage regulation, like a Potentiometer as part of a voltage divider, dictating exactly how much voltage is being put out.

3.1.3 Analog signals using negative voltages

Negative voltage is a misnomer, since the polarity of the voltage depends on the reference point of the measurement. A voltage of 5 V attached to the COM-port, usually reserved for GND, of a voltmeter would lead to a every voltage below 5 V to be measured as a negative voltage, because of the offset in the reference voltage.
The range used for these types of signals in the standard are between -2,5 V and 2.5 V. Fundamentally this is still 5 V , but the reference point for GND is set at 2.5 V, making 0 V be measured at -2.5 V and 5 V as 2.5 V. This is achieved by using a virtual ground circuit showcased in a later chapter.
This type of signal usually occurs when working with components that change the polarity of the voltage, for example by creating a sine wave.

3.2 Structure of the USPAC

Having acquired a foundation in the principles of electrical engineering, an understanding of the signal types used and a comprehensive grasp of the fundamental concepts of the USPAC, the next step is to explain the structure of the USPAC in depth.

3.2.1 A Standardized Connector

Taking inspiration from the banana connectors and the Grove ecosystem, the modules of the USPAC are connected using the AUX connector, commonly used for audio applications like headphones or speakers. AUX connectors come in several different variations, with different amount of connectors and different sizes. For the purposes of the USPAC the 3.5 mm TRS (3-pin) plug was chosen as seen in Fig. 3.1. It has the most commonly available cable and the USPAC only requires three connectors, which are exclusive to TRS. These are allocated as the following:

- Tip - signal
- Ring - VCC, here 5V
- Sleeve - GND

Apart from the availability and common usage of the plug, this connector was chosen specifically, because of its low contact resistance of 30 $m\Omega$ as well as its ability to solidly perform at 5 V and the operating temperatures of -25°C up to 70°C, performing sufficiently for the modules of the USPAC. The availability however was the main motivation for this choice, as well as the ease of

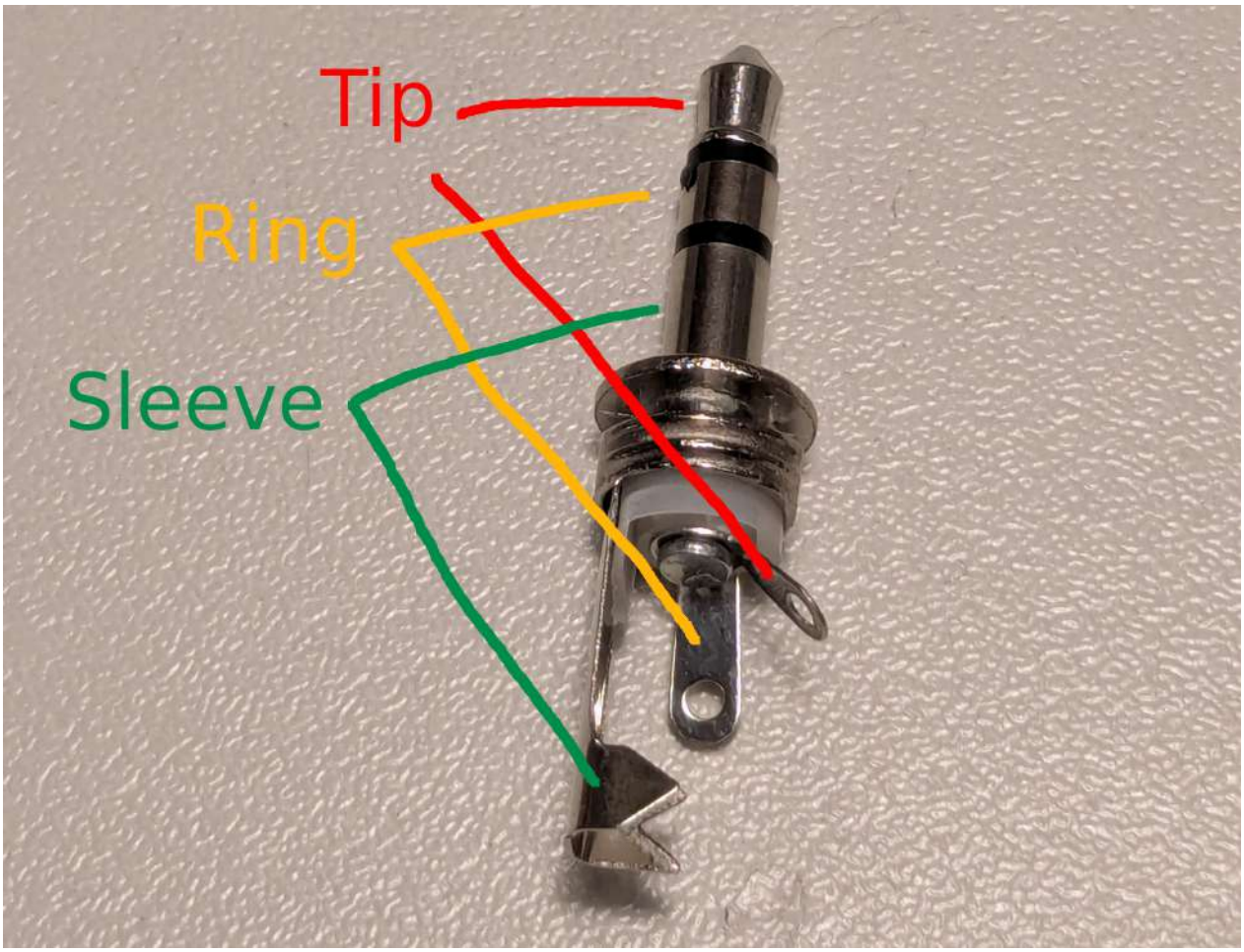

Figure 3.1: 3.5 mm TRS AUX Plug

repairability.
Each component requires a certain operating voltage, but also emits signals according to that voltage from a wide array of different values. When working with analog circuits this gets overly complicated very quickly. To ensure a unified voltage across the entire circuit, the modules featured in the USPAC scale every signal from a range from 0 V to 5 V. In addition 5 V is a suitable operational voltage of every component featured in the modules of the USPAC so far, as well as the maximum voltage permitted by the employed USB standards [20] [21] [22] [13] [23] [24] [25]. This is done by the help of an electrical component called the operational amplifier.

3.2.2 The Operational Amplifier

The operational amplifier is a component commonly used in electrical engineering. As the name implies, it is usually used in circuits trying to amplify the input voltage, by outputting the difference between the inverting and non-inverting inputs. The component has 5 connectors:

- V_{CC+}: This is the positive voltage powering the operational amplifier, if there is no voltage present, the operational amplifier does not work.

- V_{CC-}: Like V_{CC+}, this defines the negative limit of the output voltage.
- V_+: The non-inverting input.
- V_-: The inverting input.
- V_{out}: The output of the operational amplifier. It is the difference between the non-inverting input and inverting input, multiplied by the amplification A of the operational amplifier.

$$V_{out} = A * (V_+ - V_-)$$

A visual guide for the connectors of an operational amplifier is presented in Fig. 3.2.

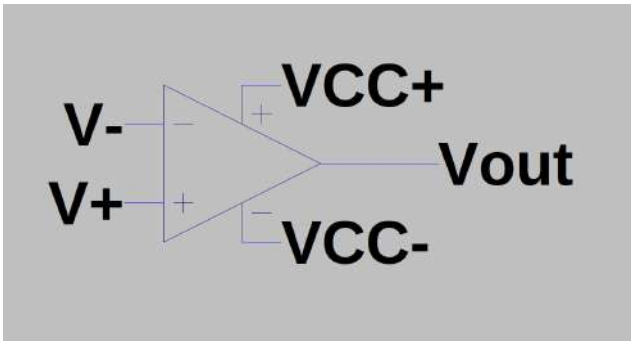

Figure 3.2: An operational amplifier with all of its pins labeled

If used by itself, the innate amplification of the operational amplifier is incredibly high, so even a small difference would immediately hit the maximum voltage, which is not useful in amplifying a value linearly, but rather for comparing two values. This will be picked up on in the later modules. In order to regulate amplification to a desired level, a closed-loop amplification is employed. This involves two resistors connected to the operational amplifier and redirecting the output back to the used input, illustrated in Fig. 3.3. The amplification is determined by the dimensions of the resistors Depending on where the resistors are connected to the operational amplifier, the polarity of the resulting voltage is either inverted or non-inverted. The modules of the USPAC use exclusively non-inverting amplification. The formula for calculating the amplification is the following:

$$A = 1 + \frac{R_2}{R_1}$$

The amplification is tailored for each input module using an analog signal, to ideally achieve an output voltage of 5 V for their highest value.
This method is not sufficient for certain sensors. The closed loop non-inverting amplification requires that the sensor starts measuring at exactly 0 V, so that the amplified result also starts at 0 V. This is not the case for every sensor. The later showcased water level sensor for example begins measuring at 1.1 V when first in contact with water and ends measurement at 1.7 V when fully submerged. The actual range of values is in between these two, thus a bias needs to be introduced, so that the output values begin at 0 V and end at 600 mV. This is made possible by expanding on the established non-inverting operational amplifier circuit. Instead of using the

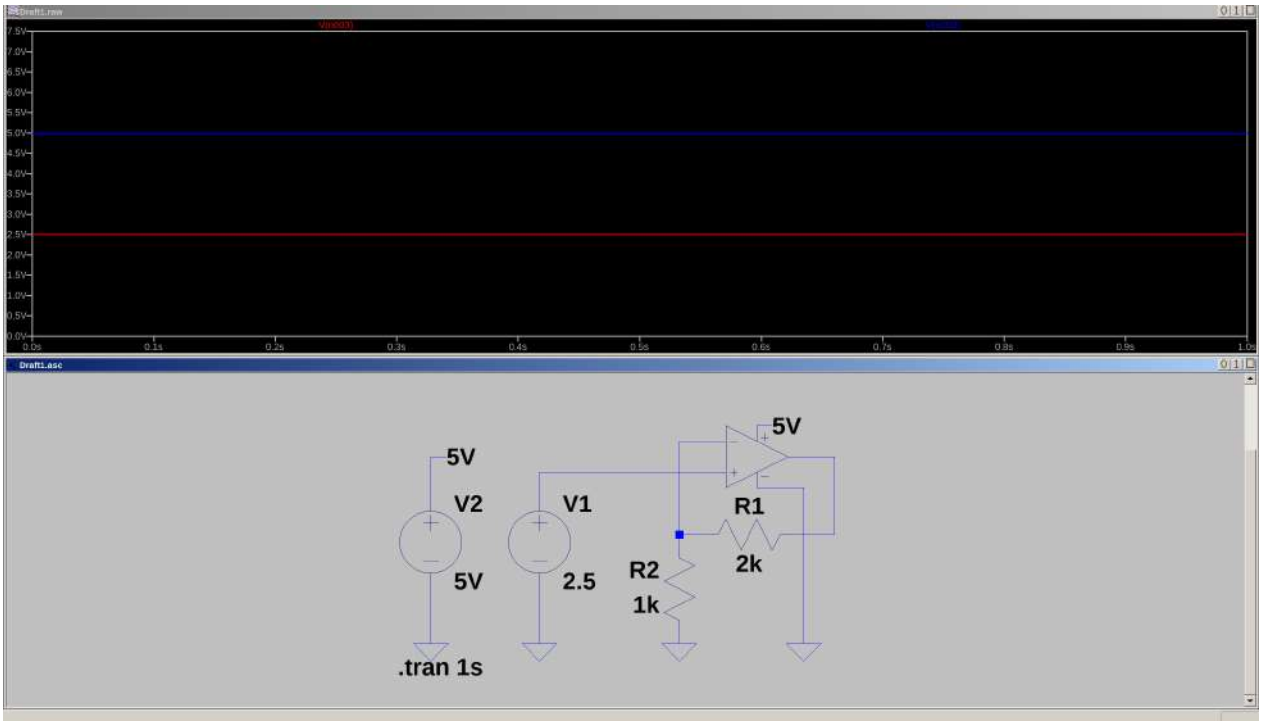

Figure 3.3: A non-inverting amplifier. The input signal of 2.5 V (red) gets amplified by 2, to an output signal of 5 V (blue)

reference value GND (0 V) at the inverting input, a voltage equivalent to the starting value of the sensor is introduced, created by dividing the 5 V provided to every module via a voltage divider. The bias gets amplified by the same value as the actual sensor value, thus subtracting the bias voltage from the sensor value.

$$V_{out} = \frac{R2}{R1} * (V_{sensor} - V_{bias})$$

This circuit is called a differential amplifier and is also known as a voltage subtractor and is seen in Fig. 3.4.

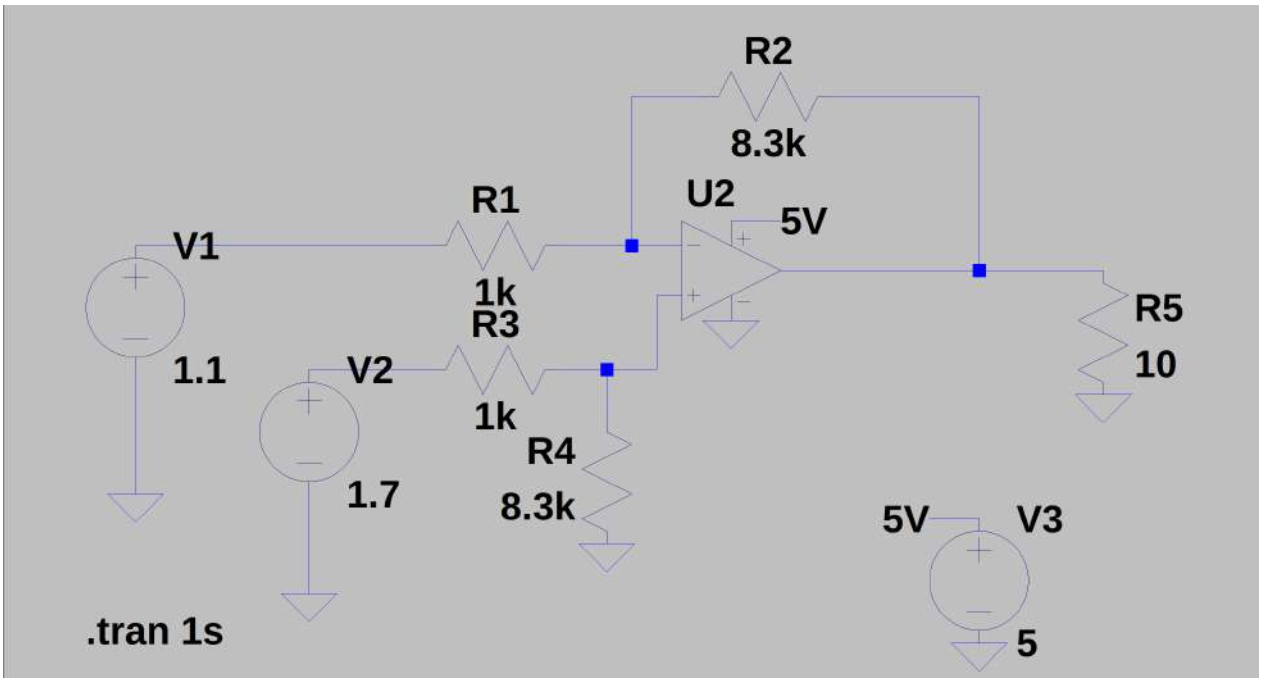

Figure 3.4: Schematic of the Differential Amplifier

Most commonly used operational amplifiers introduce a loss of voltage during the amplification. 1 V amplified by 5 could result in different voltages beneath the desired 5 V depending on the chip used. To circumvent this problem and ensure a desired range of voltages for every module, the USPAC employs the MCP6002 operational amplifier. This chip is referred to as a ”rail to rail” amplifier, meaning the voltage drops in amplifications are near zero. For this particular chip the drop is approximately 300 mV, which is still a non-negligible amount, but tolerable enough for the use case of the USPAC [25]. The MCP6002 was chosen in reference to the open source hardware philosophy of this standard, it being one of the most affordable and available chips of its kind. Other alternatives were tried, but each either had a higher voltage drop, were less accessible for testing or more expensive.

3.2.3 Overview of the Modules

Each group of electrical components is divided into three classes: IN, for input modules, PROC, for processing and OUT for output modules. There is also one power rail, henceforth called PWR, which supplies each circuit with the required voltage and current. This is limited to the USB plug used on the power rail, either USB-A, supplying a maximum of 900 mA on 5 V, or USB-C with 1.5 A on 5 V. The method of powering the USPAC was chosen to be USB-A and USB-C, since both connectors are widespread in use and in case of problems, the cables can be replaced easily. Additionally, 5 V and 900 mA are enough to power most electrical components for starting out with electrical engineering.

The IN modules are, as mentioned above, specifically for inputs. This includes any kind of electrical component that reacts to external influences. Currently developed are the following modules:

- A water level module, utilizing the K-0135-sensor [26]. The output voltage emitted by this sensor is proportional to the water level the sensor is submerged in,
- a light sensor module, which is a light reactive resistor, also known as a photoresistor, as part of a voltage divider,
- a variable voltage-module: utilizing the voltage modifying properties of a potentiometer, this module allows the initial 5 V voltage to be modified down to 0 V if desired,
- a button module, whereas pressing the button yields a 5 V output voltage,
- a LC circuit being used as an electromagnetic field detector.

The PROC modules process the signals emitted by the input modules. For analog signals, regardless of their polarity, this includes:

- A comparator module, comparing the two signals in their inputs with each other, resulting in either 5 V or 0 V depending on which has the higher voltage. This utilizes the open loop amplification of the operational amplifier mentioned earlier in this chapter,
- an AC to DC converter module, using the amplitude of an AC signal to create a consistent DC signal with a proportional voltage,
- a timer module, which utilizes the NE555 chip to output the input signal in modifiable intervals.

For logic signals these PROC modules are different. They replicate logic gates of NAND, NOR, AND, OR, XOR, XNOR and are designed in a way, that replicates the commonly known design of these logic gates as transistors.
In addition, there is one PROC module which does not affect the signal at all, but makes it accessible for multiple additional modules to access. It behaves similarly to an extension chord with additional plugs.
OUT modules showcase the result of the combination of IN and PROC modules in tangible ways for the user to comprehend. These include:

- A light module, utilizing a singular LED with the proper resistor for ideal brightness. The LED colors come in red, green, yellow and blue,
- a speaker module. Since sound is a wave, a speaker module allows circuits utilizing AC power to make sound listenable to the human ear.

3.3 The Modules in Depth

This section describes each of the modules developed for the USPAC so far. Each entry is structured by starting with an image of the schematic, followed up by a description of the module and the necessary calculations done. A photograph of built modules for the USPAC can be found at the end of the chapter, in Fig. 3.16.

3.3.1 IN

The IN modules of the USPAC are seen in Figures 3.5 - 3.9. As described in the previous section, these are intended to provide an input for the circuit that is influenced by external factors like human input.

Button Module
When designing the USPAC, it was deemed necessary for users to have interactive input in their circuit. The button input fits that criteria. Pressing the button connects the 5 V pin to the signal pin, allowing electricity to pass through to the next module. The schematic created in KiCad is seen in Fig. 3.5.

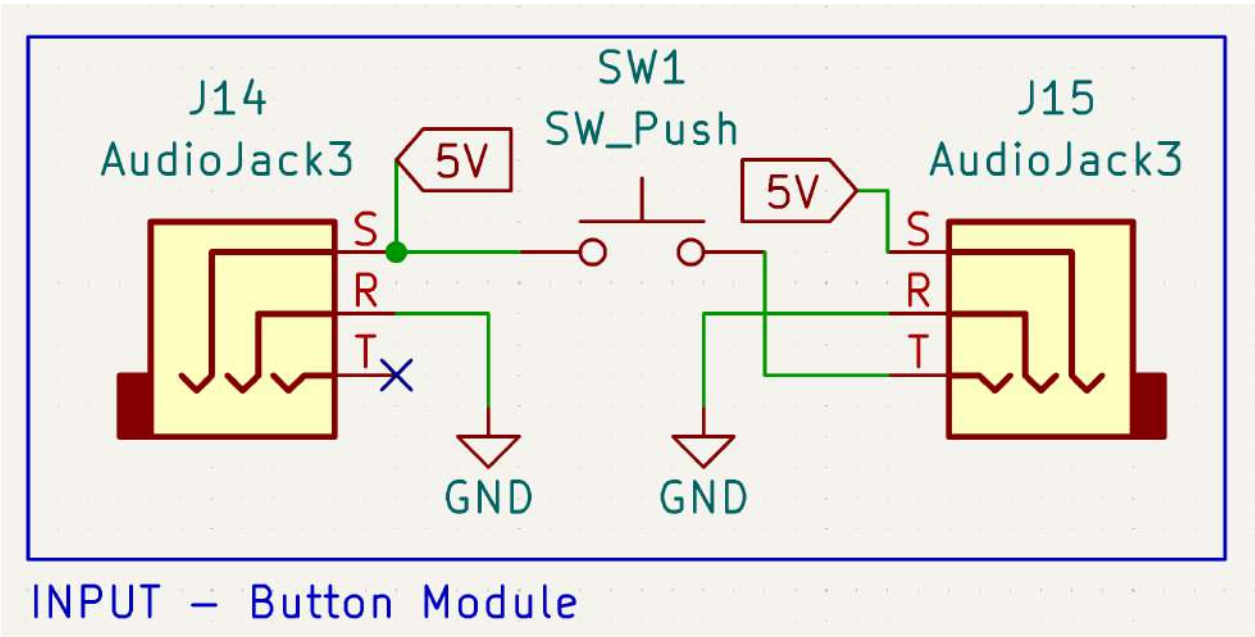

Figure 3.5: The schematic for the button module in KiCad

Water Level Sensor Module
Seen in Fig. 3.6, this module utilizes the K-0135-sensor for detecting water levels [26]. The voltage emitted is proportional to the water level, starting at 1.1 V when first contact is made, with a maximum of 1.7 V when fully submerged in water.
To circumvent the bias voltage and have the amplified value start at 0 V when no contact to water is made, a voltage divider is used to power the inverting input of the operational amplifier with 1.1 V, shifting the starting value down to 0 V.

$$V_{out} = \frac{V_{in} * R6}{(R5 + R6)}$$

$$V_{out} = \frac{5V * 1k\Omega}{(3.3k\Omega + 1k\Omega)}$$

$$V_{out} = 1.1V$$

With a value range of 600 mV, the required optimal amplification value is 8.3.

$$A = 5V/0.6V$$

$$A = 8.3333$$

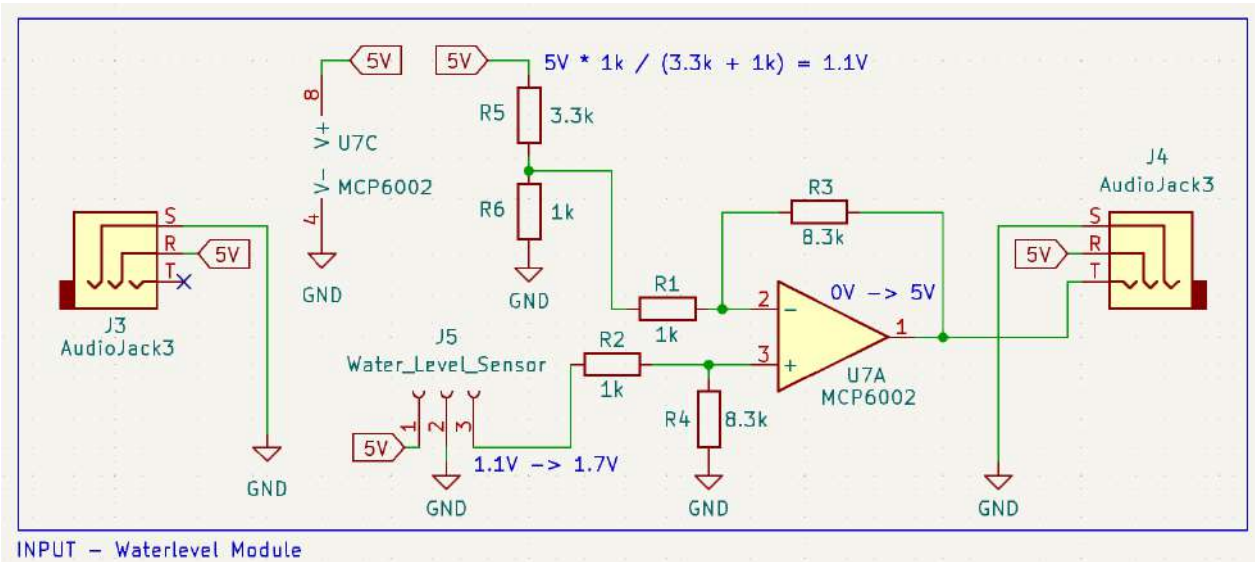

Figure 3.6: The schematic for the water level module in KiCad

Light Sensor Module

The light sensor module changes the output value depending on the brightness received by it. It utilizes the GL5516 photoresistor, a resistor capable of changing the resistance when illuminated by a light source. The resistance of the photoresistor used is 500k Ω when in total darkness, decreasing to 5k Ω under full illumination [27]. To scale these results to fit into the USPAC, the photoresistor became part of a voltage divider, whereas total darkness would output 2.5 V and full brightness result in 0.050 V. This voltage gets amplified by 2, resulting in a possible value range of 100 mV up to 5 V. The lowest value not being 0 V is negligible for this module, 100 mV is a low enough value to not cause unwanted results. The schematic created in KiCad is illustrated in Fig. 3.7.

$$V_{out} = \frac{V_{in} * R_{photo}}{(R_1 + R_{photo})}$$

$$(1)V_{out} = \frac{5 * 500k\Omega}{(500k\Omega + 500k\Omega)}$$

$$(1)V_{out} = 0.050V$$

$$(2)V_{out} = \frac{5 * 5k\Omega}{(500k\Omega + 5k\Omega)}$$

$$(2)V_{out} = 2.5V$$

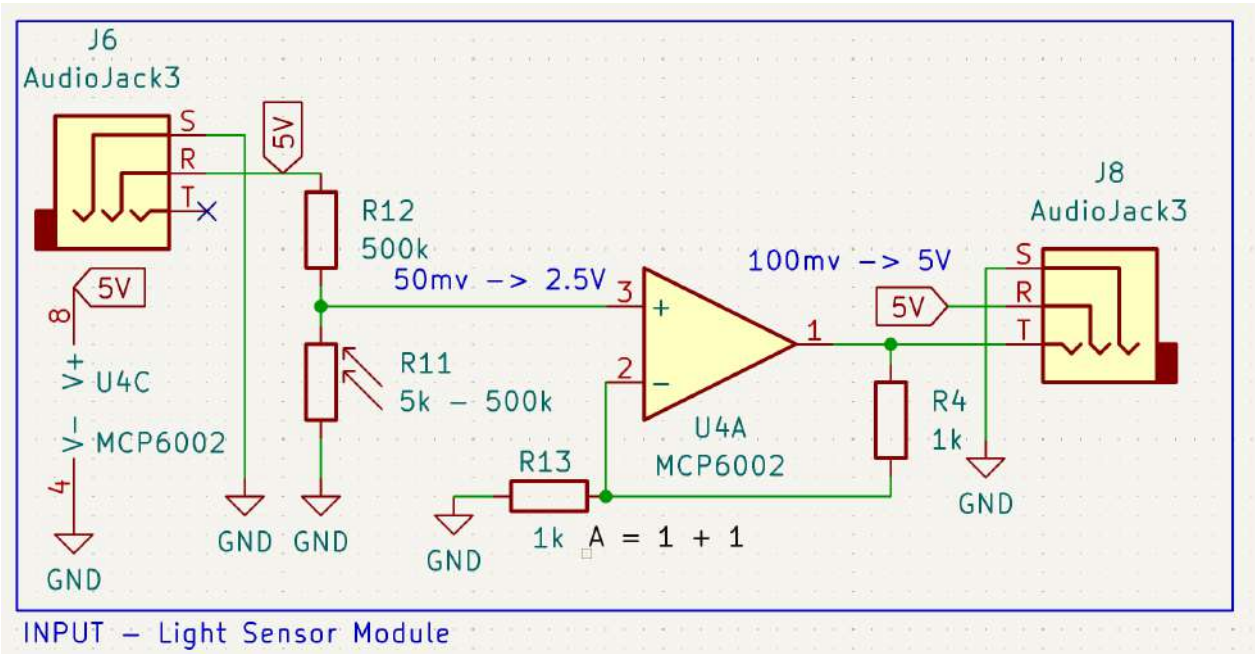

Figure 3.7: The schematic for the light sensor module in KiCad

Electromagnetic Field Detector Module

This module allows the interference of adjacent electromagnetic fields to be measured. This is made possible by the interaction of a capacitor with an inductor in series. When the capacitor is storing electrical charge, it creates an electrical field around itself, once it starts discharging current flows through the inductor, creating a magnetic field to store electrical energy. Once the capacitor is empty, the inductor starts discharging, in turn charging the capacitor once again. The specific frequency at which this exchange occurs is dependent on the dimensions of the inductor and capacitor.

This interplay is susceptible to electromagnetic fields emitted by devices that utilize electricity, as it disrupts the equilibrium between the discharging capacitor and inductor, thereby introducing additional charge into their cycle. This interference is the output signal of the module. The voltage of the interference is very low, thus the amplification picked for the module was set at 230. This number was based on the calculations done by Jonas Gruska when developing the Electrosluch [28], cross referenced with results from the measurement series step of the thesis, where different magnetic and electric fields of varying frequency and amplitude were tested.

The output of this module features AC, therefore the amplification is limited to upwards of 2.5 V, dividing the initial 5 V used across the standard to allow a negative voltage of -2.5 V to be reached for the signal. This is done with a voltage divider present on board, required for every module using AC. Each of the components making up the electromagnetic field detector module is comprehensively presented in Fig. 3.8

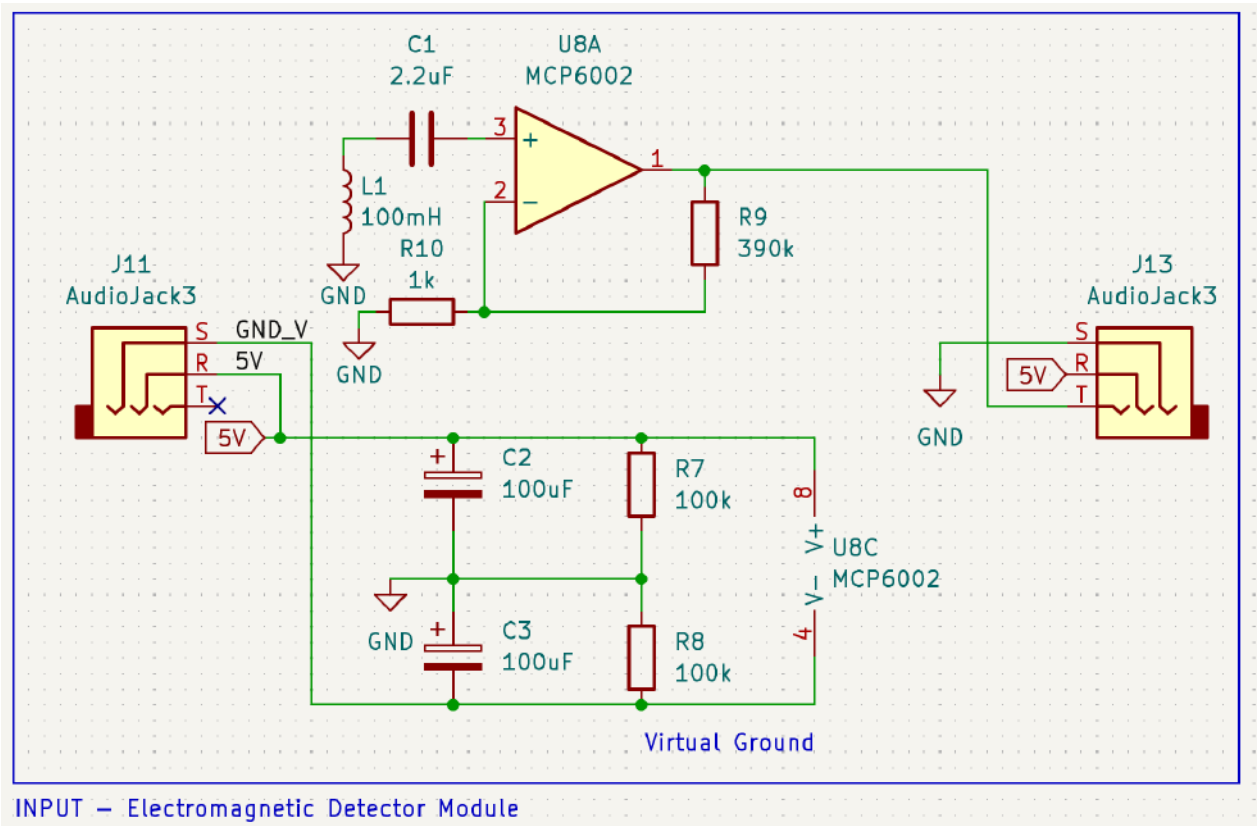

Figure 3.8: The schematic for the electromagnetic field detector module in KiCad

Variable Voltage Module

Seen in Fig. 3.9, the variable voltage source module allows the user to control the input voltage between 0 V and 5 V by turning the knob of a potentiometer. The potentiometer behaves like a voltage divider, where the turn of the knob modifies the resistances, resulting in a changed voltage. The module is intended to be used as a reference point for PROC modules, such as the comparator, and as a dimmer for the LED. The maximum resistance of the used potentiometer is 10k Ω.

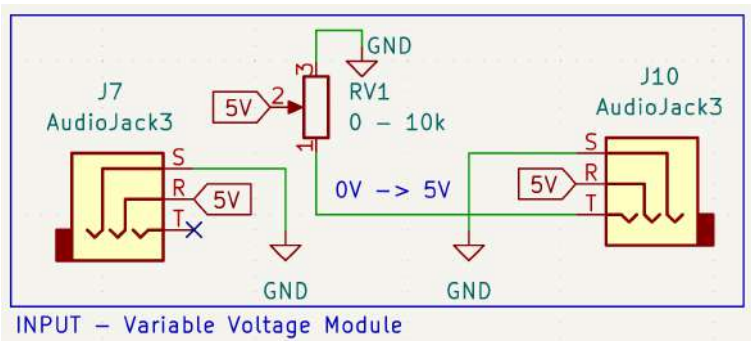

Figure 3.9: The schematic for the variable voltage module in KiCad

3.3.2 PROC

The PROC modules of the USPAC are seen in Figures 3.10 - 3.13. They take the signal provided by the previous module and modify it, which in turn can be lead back into another PROC module or directly to the OUT modules.

Comparator

As mentioned in the previous section, when an operational amplifier is not within a closed loop for amplification, they output either the highest or lowest possible value on the slightest change in their inputs. This module uses this ability for its advantage, thus becoming able to compare two values with each other. Both are inserted into the two plugs on the left side, the output value, either 5 V or 0 V is emitted out of the plug on the right side. The direction of the lever signalizes which input is needed to be higher to output a positive value of 5 V. This behaves similar to the "If" instruction in programming, the logic can be seen with the schematic in Fig. 3.10.

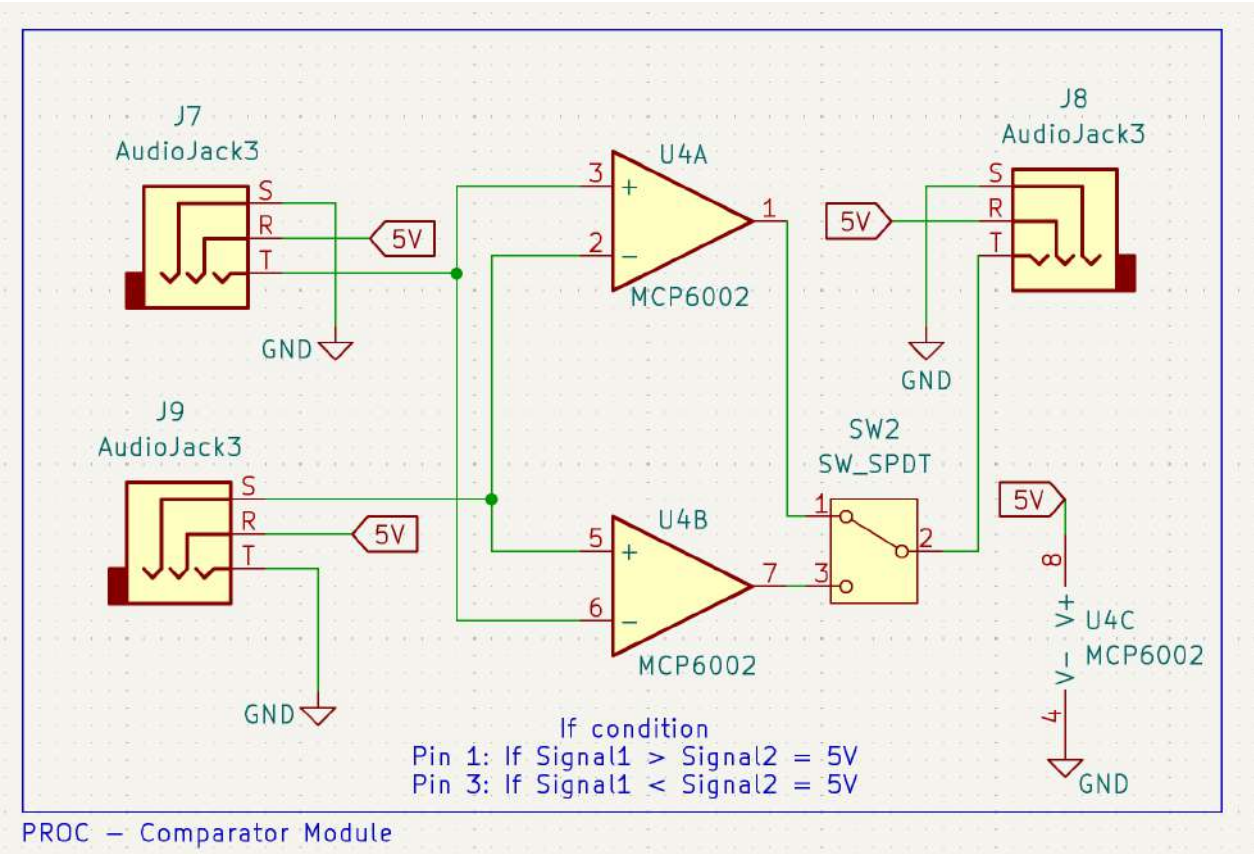

Figure 3.10: The schematic for the comparator module in KiCad

AC to DC Module

This module consists of two crucial circuits, commonly used in electrical engineering: The full bridge rectifier with smoothing capacitor and the operational amplifier. Both in junction convert an AC signal into a DC signal, scaled proportionally to fit into the framework of the USPAC. The

following description of the circuit is in reference to the schematic presented in Fig. 3.11.
A full bridge rectifier with smoothing capacitor consists of four diodes a resistor and a capacitor. It converts incoming AC signals into DC signals with the help of the functionality of the diodes. Diodes have a near zero or very high resistance, depending on the direction of the applied voltage, thus the current is only allowed to flow one way. The configuration of the four diodes of the full bridge rectifier govern the flow of current, ensuring the direction is fixed to be a single polarity, regardless if the signal is negative or positive. The capacitor is connected in parallel to the output load, the following operation amplifier, charging until the peak voltage of the signal is reached and discharging once the AC inevitably would decrease down to zero. This maintains the peak voltage during discharge of the capacitor, creating a DC signal. The resulting DC signal is between 0 V and 2.5 V, with added loss from the use of the capacitor. To fit into the framework of the USPAC and mitigate the loss of the capacitor, the signal gets amplified by the following operational amplifier. During the simulation and prototyping step of the thesis, it was determined that the amplification is ideally set at 2.6 to receive a DC 5 V signal from a 2.5 V AC input.

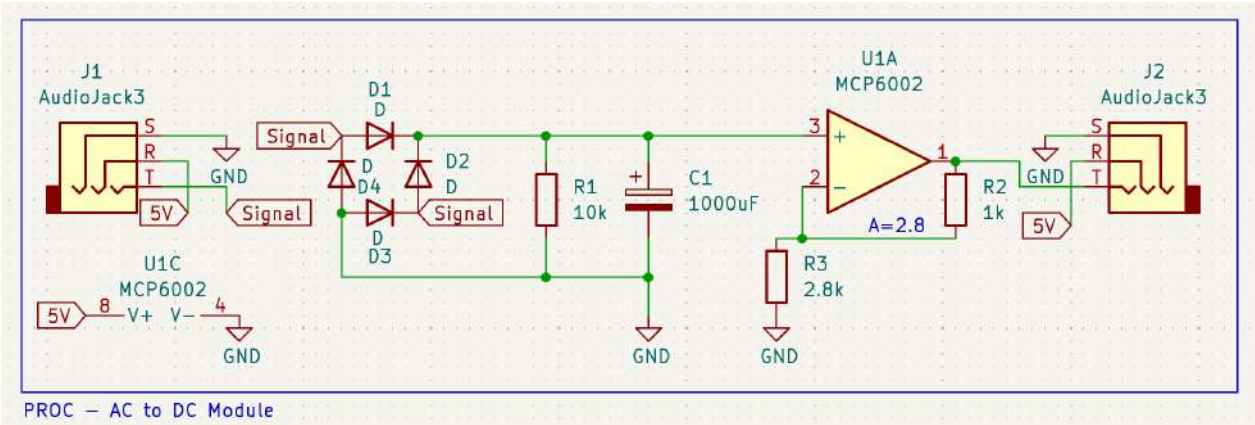

Figure 3.11: The schematic for the AC to DC module in KiCad

Timer Module

Seen in Fig. 3.12, this module uses the NE555 operational amplifier to create a square wave, with the highest Voltage of the wave equivalent to the input signal provided to the module [29]. The circuit is further described in "Engineer's Mini Notebook - 555 Timer IC Circuits" by Forrest Mims III [30]. In the book, it is known as a "Pulse Generator" that emits a square wave with a certain frequency according to the dimensions of C1 and R1. To simplify the process, the control of the frequency is elected to be exclusively controlled by R1, replacing a static resistor with a potentiometer with a range from 0 Ω to 100k Ω. Modifying exclusively R1 only allows to change the time the input signal is allowed to pass through. With the lowest resistance value this is equal to the time the signal is not allowed to pass through: 1 second. The maximum time when the potentiometer has reached the maximum resistance is 4 seconds of pass through time.

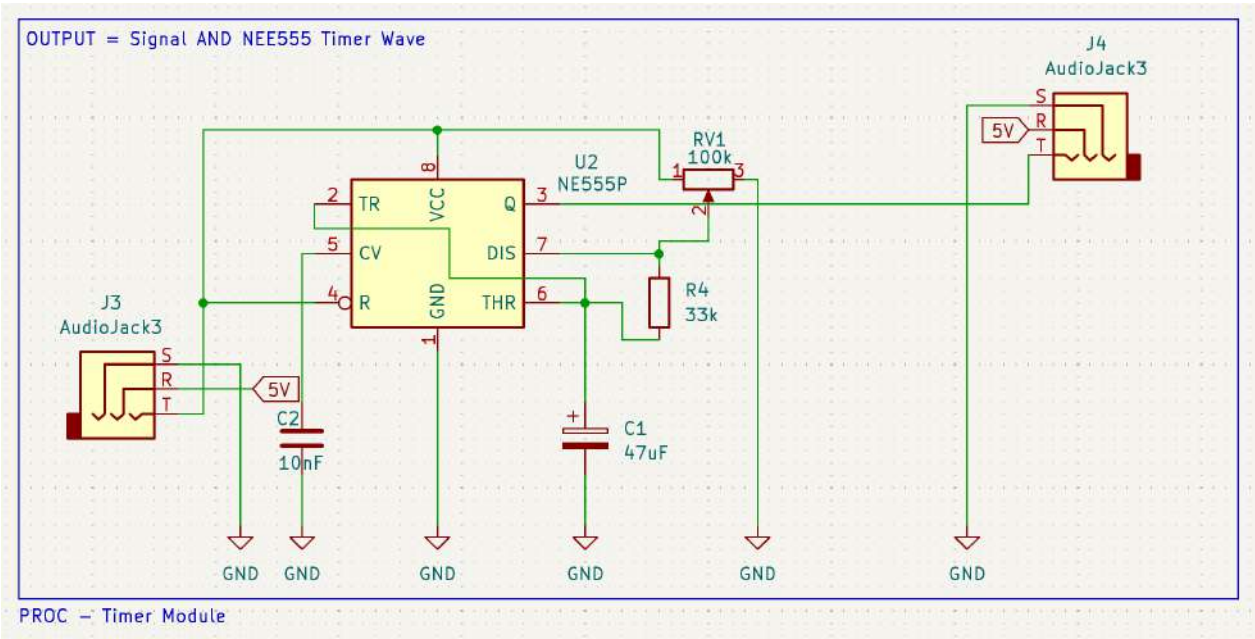

Figure 3.12: The schematic for the timer module in KiCad

Logic Gates

To provide insight into the space outside of analog circuits, the USPAC features modules that replicate commonly used logic gates: NAND, NOR, AND, OR, XOR, XNOR. The layout of the PCB is equivalent to the known schematics of the logic gates, making them easy to understand even outside of the context of the USPAC. The transistors used for these modules are the N-Channel BS170 and the P-Channel BS250, chosen for their fast switching speed and recommended use for logic gates [23] [24]. They are primarily intended to be used in conjunction with modules that output max voltages, like the variable voltage module, the comparator or the following LED module. The NAND gate, from which every other gate can be built from, is seen in Figure 3.13.

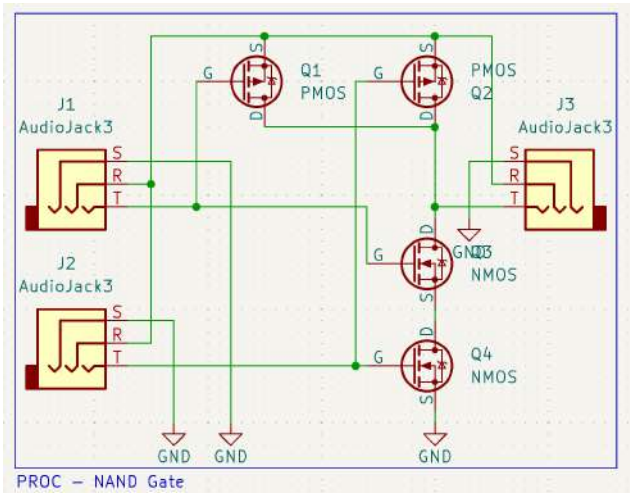

Figure 3.13: The schematic for the NAND gate module in KiCad

3.3.3 OUT

The OUT modules of the USPAC are seen in Fig. 3.14 and Fig. 3.15. They are the final stage of every circuit, showcasing the result of the previously used IN and PROC modules.

LED Module

The USPAC utilizes LEDs provided by KINGBRIGHT, the values with which calculations were done are in accordance to the datasheets provided [13] [22]. Although it is important to note, that LEDs of any providers are very similar as long as the dimensions stay the same.
The LED module is one of the simplest modules of the USPAC as seen in Fig. 3.14. It comes in four colors: red, green, yellow and blue, covering the complete spectrum of light and offering a variety of colors. Each of the LEDs require a different voltage, ranging from 2 V for red, 2.1 V for yellow, 2.2 V for green and 2.6 V for blue to work with a minimum power of 2 mA. In order to regulate the required voltage using Ohm's law, it is necessary to add a resistor to the circuit. The size of this resistor on the module is 200 Ω.

$$R = \frac{5V - 2.0V}{30mA}$$
$$R = 100\Omega$$

The calculations via Ohm's Law state that a resistance of 100Ω would be sufficient, however these are done with the maximum allowed power of 30 mA, which would exert an unnecessary strain on the LED, at the benefit of a higher brightness of approximately 15% according to the datasheet [13] [22].

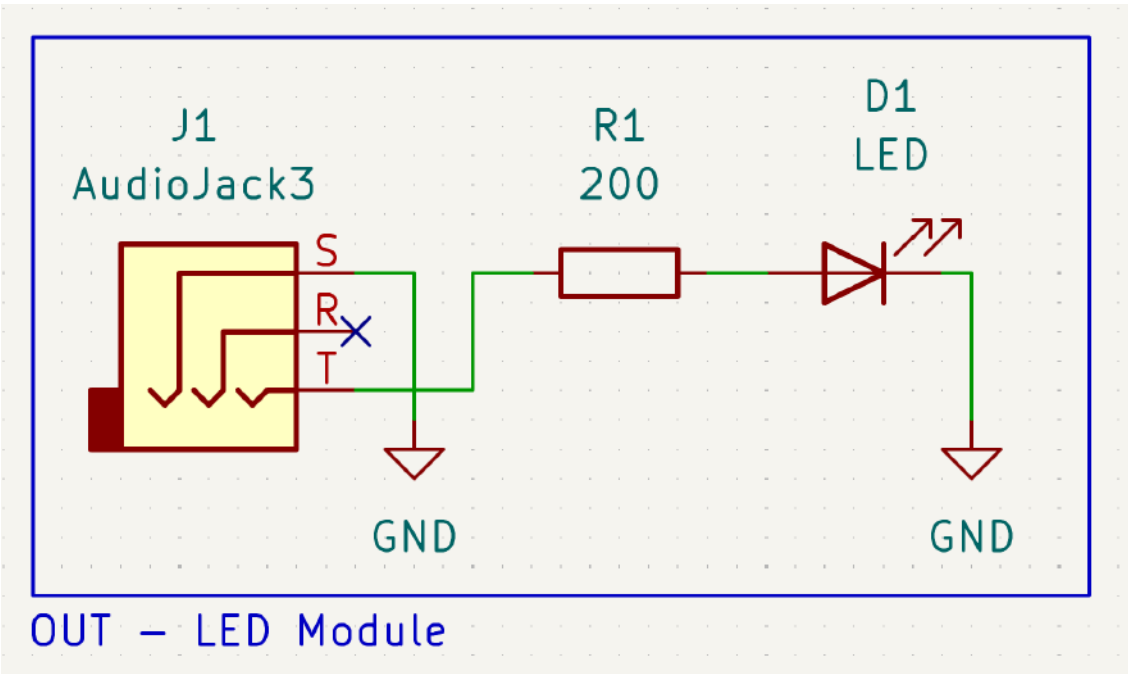

Figure 3.14: The schematic for the LED module in KiCad

Speaker Module

The last developed module in the scope of this thesis for the USPAC is the speaker module, seen in Fig. 3.15. At the current state of development, this module exclusively works with an AC input. A DC input would result in the speaker being stuck at one position, not swinging and thus not producing sound. A proposal for an alternative approach to represent DC with the speaker module is briefly touched on in the next chapter.

The speaker module employs a highly sensitive 40 Ω speaker, usually reserved for headphones, to transmit sound. To circumvent damage to the speaker a potentiometer is placed between input signal and the speaker, regulating the voltage received by turning the knob. It is imperative that the potentiometer is set at the highest possible value of 10k Ω when using the module for the first time in the circuit, the amplitude of the two possible AC modules, the timer and the electromagnetic field detector module, can vary by a lot, risking damage to the speaker if the voltage is unregulated.

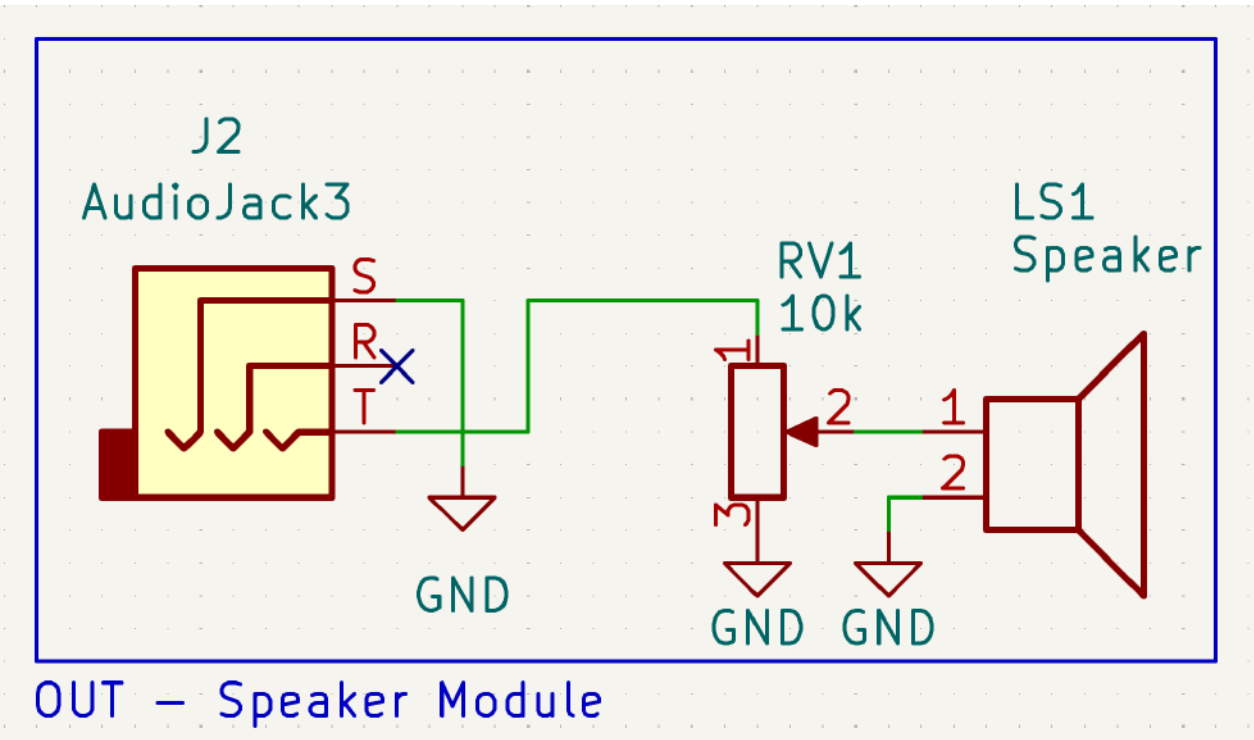

Figure 3.15: The schematic for the speaker module in KiCad

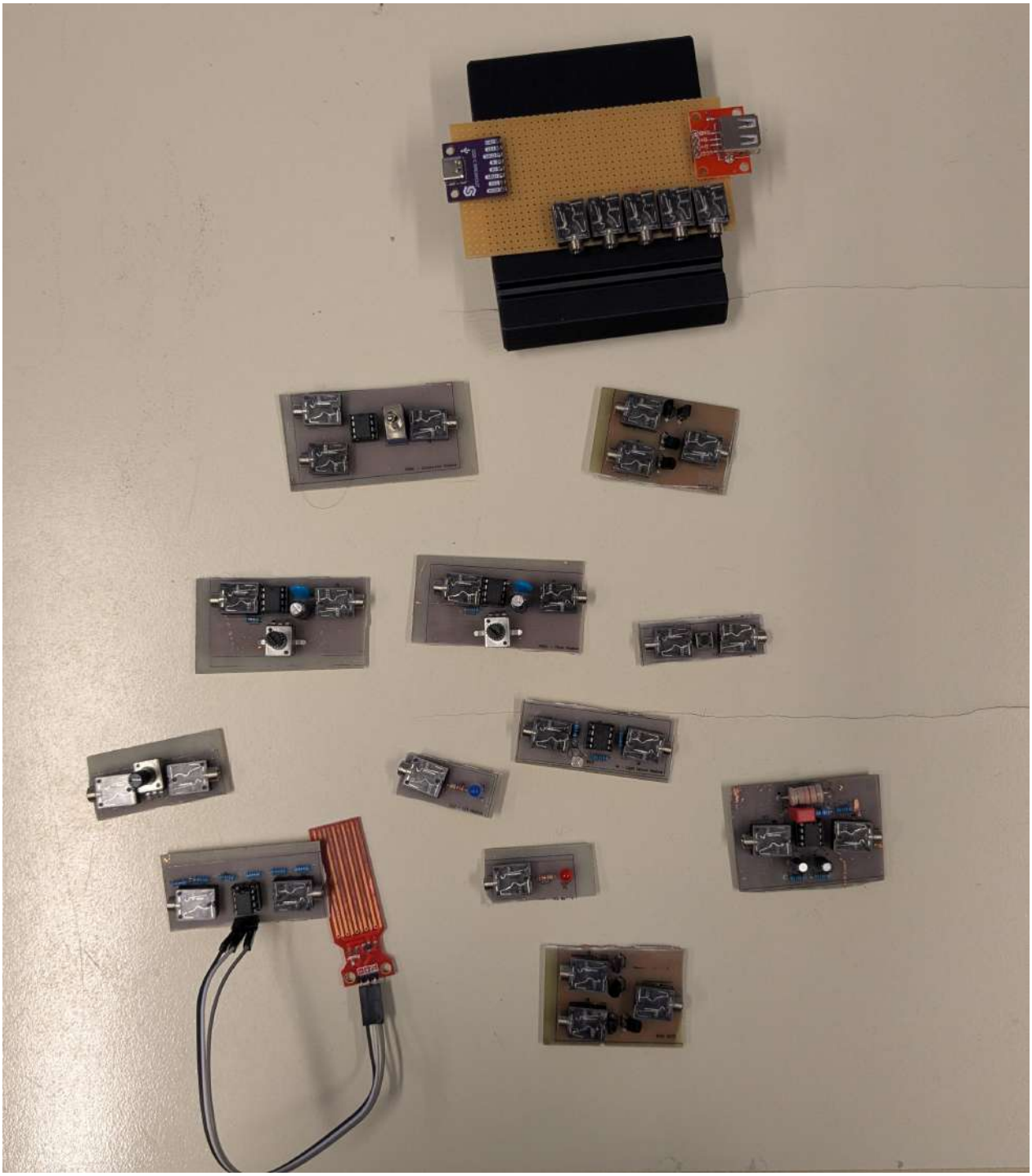

Figure 3.16: A selection of the built modules for the USPAC

4 Discussion

Returning back to the questions asked in the introduction of this thesis, this chapter presents the results of the USPAC and how it contributes to dismantling the educational barriers that make up the digital divide. Starting out with circuits built using the USPAC and their benefits and drawbacks in practice. Using these results, the research question proposed in the introduction is answered, along with a summary of the limitations of the USPAC, observed during every step of the process presented in this thesis. Concluding this chapter is a look to the future: showcasing potential future developments and additional avenues of research for the USPAC.

4.1 The Modules in Practice

This section will showcase some of the circuits built using the USPAC. Each of them were hand-picked for their role in education, level of difficulty and overall complexity when building them without using the USPAC.

4.1.1 Water Level Measuring Circuit

This circuit is a derivative from an existing Arduino circuit, where the logic was handled by the microcontroller. The basic functionality is that once the water reaches a certain height, an LED is supposed to glow. If that value is not reached, then the LED is turned off. Using the USPAC the circuit consists of the following modules:

- The Water Level Sensor module, with values ranging between 0 V (no water contact) to up to 5 V (fully submerged in Water),
- the variable voltage module, used as the reference voltage for the water level,
- the comparator module responsible for comparing the voltage of the water level sensor and the reference voltage,
- the blue LED module, for signifying when the target value is reached.

The circuit worked as expected, turning the LED on once the value set by the variable voltage source was reached. It is important to acknowledge that despite the results in the simulations and calculations done in the prototyping step of the development, the water level sensor still had a bias voltage in certain test cases. It was concluded that this is most probably the fault of the wear and tear of the component with prolonged usage. The water level sensor used, determines the measured level with exposed power lines, changing the resistance based on the exposure to water.

These power lines are prone to rusting or receiving limescale in hard water, leading to skewed measurement results. When creating this circuit with the help of an Arduino microcontroller, this bias can easily be accounted for by modifying the programming according to the added bias. The USPAC module however has a set value on the amplification, thus with increased usage, the value steadily becomes less accurate, making the use of the circuit degrade over time. The final circuit built with the USPAC is seen in Fig. 4.1.

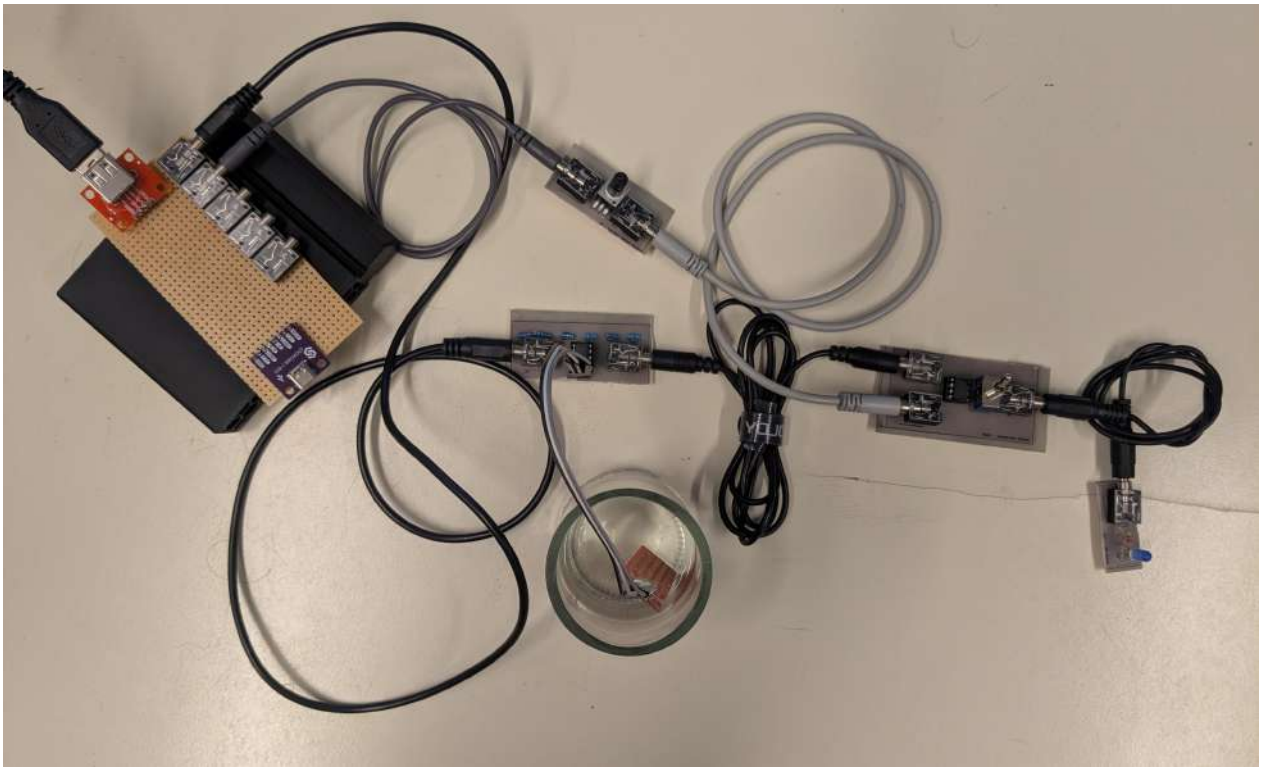

Figure 4.1: The water level measuring circuit built using the USPAC. The modules are from left to right, top to bottom: The PWR board, using USB2.0, the variable voltage module, the water level sensor module, the comparator module and the blue LED module

4.1.2 Blinking LED Circuit

A circuit derived from the LED example presented at the start of the thesis. This circuit incorporates an LED, the brightness and blinking interval of which can be adjusted through the use of two potentiometers. The modules are the following:

- The variable voltage module, to control the brightness of the LED by reducing the voltage of the circuit
- The timer module, to make the LED blink in an interval between 1 and 4 seconds
- The LED module

Similar to the first circuit presented in this chapter, this prototype worked as expected too. The ranges of brightness given by the variable voltage module are very responsive, despite the travel

through multiple modules. The circuit can be expanded by adding additional LEDs or using the logic modules in conjunction with an additional timer circuit to increase or decrease the likelihood of the LED to blink at any given time. The circuit built using the USPAC is seen in Fig. 4.2.

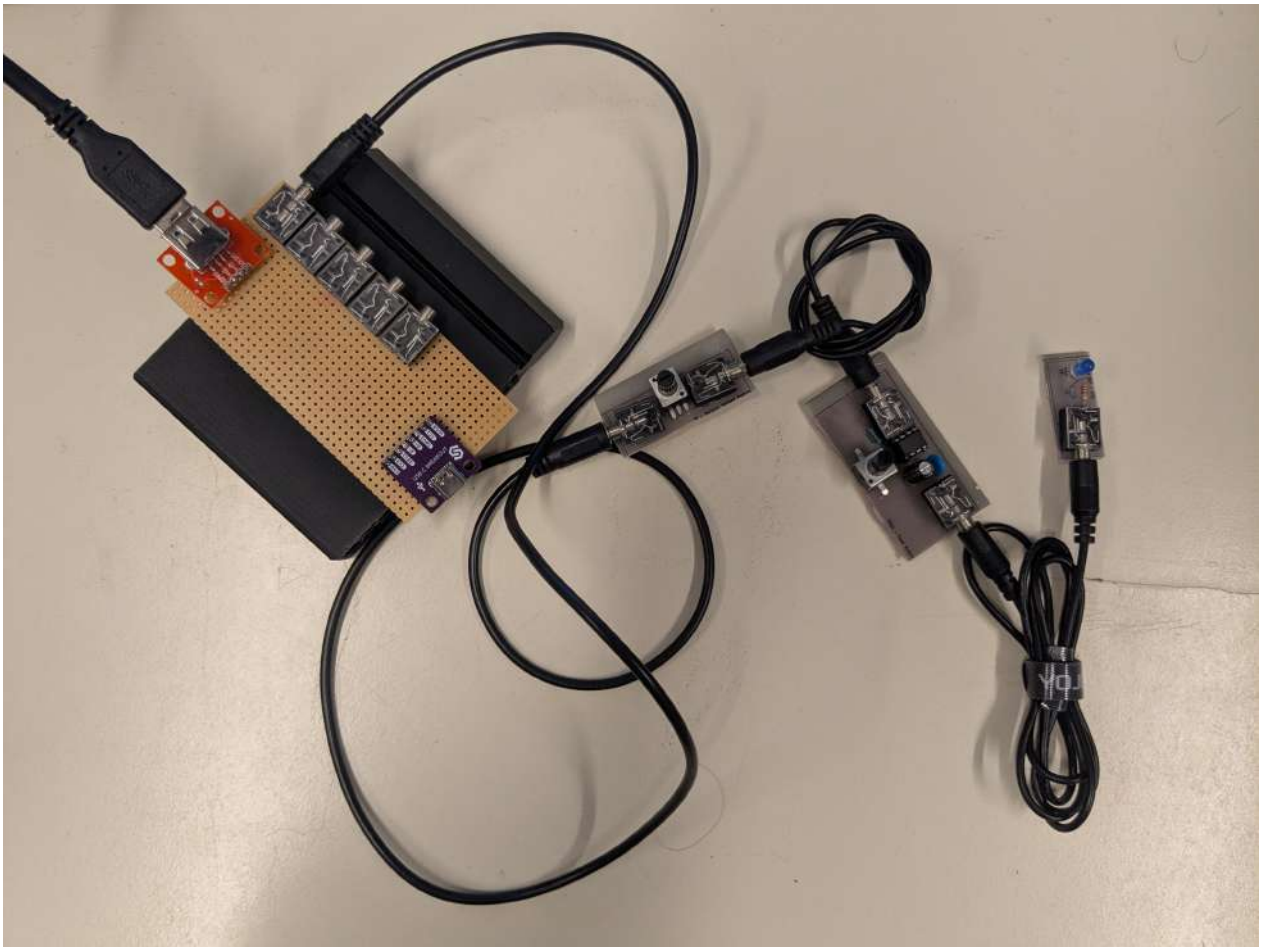

Figure 4.2: The blinking LED circuit built using the USPAC. The modules are from left to right: The PWR board, using USB2.0, the variable voltage module, the timer module and the blue LED module

4.1.3 Atari Punk Console

First known as the "Sound Synthesizer", then "Stepped-Tone Generator", later nicknamed "Atari Punk Console", the circuit was created by Forrest Mims III in 1984 for his book on electronic circuits [30]. It is a circuit generating sound akin to the noises made by the Atari 2600, thus the name. It creates these sounds by generating square waves with two timer circuits placed in series [30]. To build the circuit the USPAC following modules are required:

- Two timer modules, the first one controlling the frequency of the circuit, the second one using the signal of the first to shift the signal by the octave
- One speaker module for emitting the generated sound.

Attempting to build this circuit with the modules currently available for the USPAC is possible, but nonfunctioning because of the inaudible frequency generated by the timer modules. These are designed to cycle in one second intervals at the quickest, this is great for circuits utilizing blinking LEDs, but impossible to produce audible sound with. The Atari Punk Console presented in Forrest Mims III work [30] utilizes a frequency starting at 300 Hz up to 2.5k Hz, covering nearly the entire spectrum of hearing for humans. To be able to replicate this circuit using the USPAC different components for the timer modules are needed, most importantly a smaller capacitor. This is in turn would make blinking LEDs impossible, because a frequency of this magnitude is not observable for the human eye, thus the LED would not be seen as blinking. This showcases one of the limitations of the USPAC further elaborated on at the end of this chapter. The Atari Punk Console built using the USPAC is seen in Fig. 4.3.

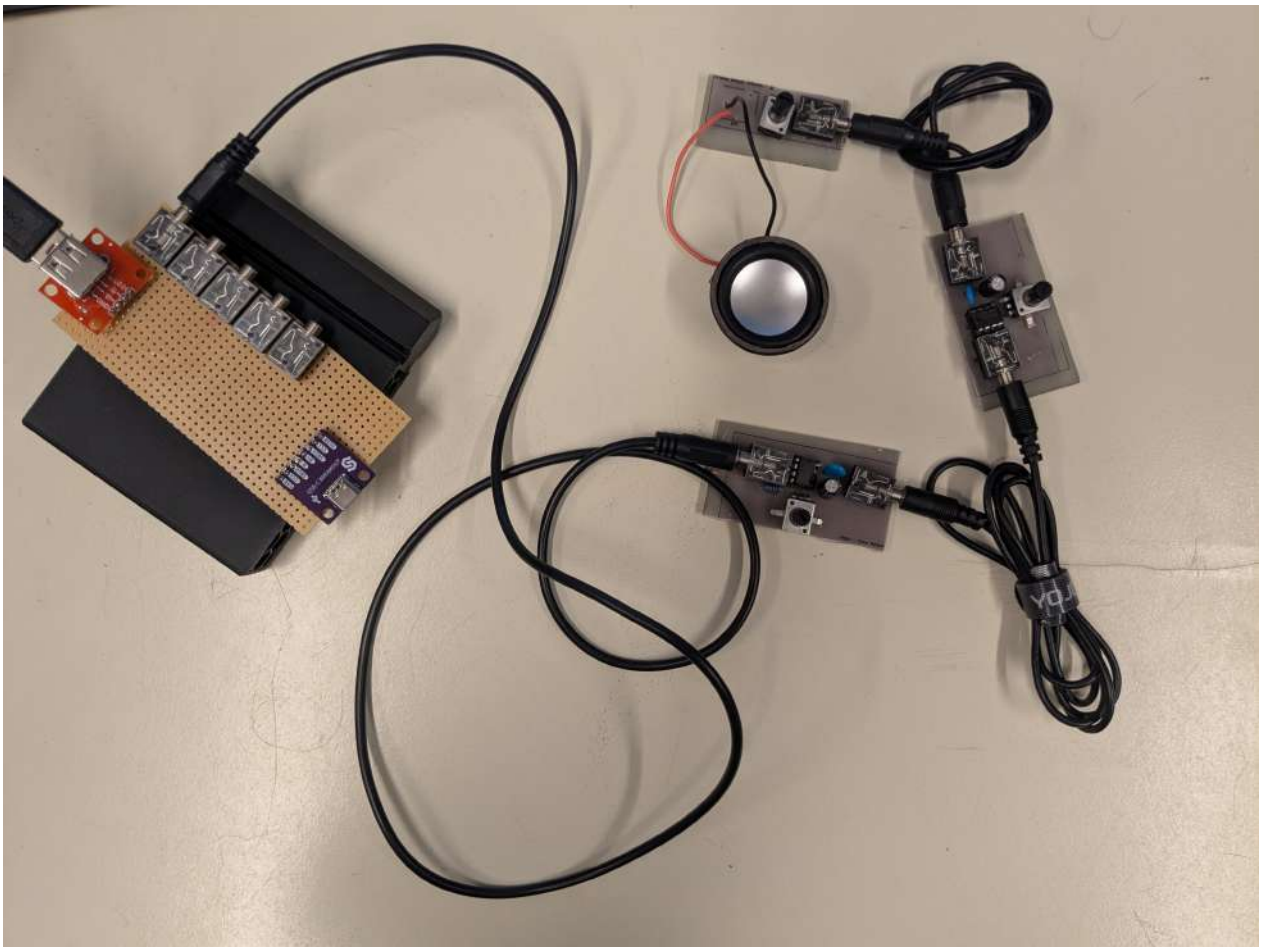

Figure 4.3: The Atari Punk Console built using the USPAC. The modules following the cable from left to right are: The PWR board, using USB2.0, two timer circuits and one speaker module

4.2 Answering Research Questions

The goal of this thesis was to showcase the development of a universal prototyping standard for analog circuits, capable of closing the gap in education contributing to the digital divide as described by Massimo Ragnedda and Glenn W. Muschert in the book ”The Digital Divide” [3], with a special focus on the lack of education in electrical engineering, based on the findings of Chris R. Smaill et.al [4] and the lack digital literacy despite higher exposure and access to technology as seen in the 2023 IEA survey [5].
To achieve this, the USPAC was designed with three core aspects in mind: A design that enables the users to iterate and debug their circuits easily. Using affordable components and open source hardware design to encourage expansion of the standard. with the help of the full documentation in this thesis. Every module and component is designed in a standardized framework. Allowing each module to be connected via one standardized connector, a new use for the AUX connector commonly used for audio applications. Every module is supplied by the same voltage and every output is scaled to the same range of possibles voltages. This is all made possible without sacrificing the ability to learn about different fields of electrical engineering, while maintaining the flexibility to create individual circuits.
The core aspects were chosen based on the findings of Lambericht et.al ”A Survey and Taxonomy of Electronics Toolkits for Interactive and Ubiquitous Device Prototyping” [9]. Each of the characteristics that make up each of the aspects were the most favored traits in prototyping tools for participants unfamiliar with electrical engineering. These characteristics are already present in established prototyping tools, but none of them feature all. The black boxes featuring Banana-Connectors, while being a safe prototyping tool that is easy to debug and use, only allows few options for iteration, since the scope and usage of these circuits is mostly restricted to measurement equipment. The Arduino standard in combination with the breadboard offers a great flexibility and debugging possibilities, assisted with the use of a computer and components utilizing digital signals. But the comprehension and ease of connectivity wished by participants of the study [9] is highly lacking with those tools. In addition, the utilization of the Arduino necessitates a fundamental understanding of programming. To employ the device to its maximum extent, advanced proficiency is necessary.

4.3 Limitations and Potential for Future Development

One of the biggest limitations is the current scope. At this stage, a sufficient number of modules have been created to initiate a small number of projects. However, the successful implementation of this standard on a large scale would necessitate the additional design of a greater number of modules. In addition, this standard lacks the specificity in the picking of components compared to a breadboard. The potentiometers are all set to a specific range, which can be limiting for specific purposes, for example prototyping a very fast, or very slow timer circuit, referencing the limits showcased in the Atari Punk Console. In addition, this standard is completely analog,

which by itself is not a big problem, but once more complex ways of evaluating data, especially from sensors, is needed, this standard quickly fails to achieve it. A numerical value is completely out of the question at the moment, without an Analog-Digital Converter (ADC) as a module and an additional way to output said numbers. But there are other and much better ways to achieve prototyping with digital components, thus I only note this as a limitation, not necessarily as a drawback of the standard.
The USPAC is also restricted to the maximum current and voltage of the USB standard, this being 900 mA at 5 V using USB-A and 1.5 A at 5 V using USB-C. It is important to note that this excludes "USB-C Power Delivery", which would grant us 3 A at 20 V. These restrictions discourage the use of higher voltage components, such as larger motors or LED Strips, but would also require a large scale rework of the existing modules, to maintain the philosophy of one voltage across the entire circuit. The electromagnetic field detector module presented in this thesis also turned out to be incompatible to the philosophy of one voltage across the entire circuit. The voltages emitted in the case of interference, regardless of the intensity was too small to be realistically amplified to up to 2.5 V. This in turn made the module unusable for certain circuits. Future development should consider finding a solution for modules featuring very low voltages.
Future developments may include the creation of additional modules, especially more OUT modules, since these have been underrepresented in this thesis. A critical component considered to be developed at the infancy of this thesis was the Voltage-Controlled Oscillator (VCO) module. This module was designed to facilitate the integration of DC-operated modules with AC modules, particularly OUT modules, such as the speaker. This however exceeded the limits of this thesis, remaining an idea open for future work. The implementation of an enclosure for each module type would serve to enhance the visual clarity of the system. This would promote learning and accessibility of the modules. At the current moment they are labeled in the corner of the PCB. To upkeep the core philosophy of open source hardware, these enclosures should be 3D-printed, with the files open to the public.

5 Conclusion

This thesis presented the USPAC, a universal standard for prototyping analog circuits. It allows the creation of analog circuits by connecting small modules to each other, each standardized to utilize the same voltage range across the circuit. The goal of the USPAC is to close the gap in education contributing to the digital divide, a phenomenon describing the unequal access and utility of internet communications technologies, based on socioeconomic factors, such as income, education, age and gender. Every chapter in the thesis described in detail the steps used to develop the USPAC. They ranged from simulating planned circuits, realizing them on breadboards and permanently etching them onto printed circuit boards. This access to open documentation is a key component to bolster education, by showcasing the tools and methods used, it enables further improvement and contributions to the standard. In practice the circuit built with the USPAC mostly worked as expected, with the limitation of circuits utilizing low voltage signals and high frequencies. Future development opportunities arise in creating open source enclosures, that make the USPAC easier to understand, creating additional modules to be able to prototype more circuits and establish a repository of information about the USPAC, to make information about it more concise.

Bibliography

[1] Alexander Wenz and Florian Keusch. "The second-level smartphone divide: A typology of smartphone use based on frequency of use, skills, and types of activities." In: *Mobile Media & Communication* 11.3 (Sept. 2023). ISSN: 2050-1579, 2050-1587. DOI: 10.1177/20501579221140761. URL: https://journals.sagepub.com/doi/10.1177/20501579221140761 (visited on 09/20/2025).

[2] Jacob Poushter. *Smartphone Ownership and Internet Usage Continues to Climb in Emerging Economies*. 2016. URL: https://www.pewresearch.org/global/2016/02/22/smartphone-ownership-and-internet-usage-continues-to-climb-in-emerging-economies/ (visited on 09/20/2025).

[3] Massimo Ragnedda and Glenn W. Muschert. *The digital divide: the internet and social inequality in international perspective*. Routledge advances in sociology. London: Routledge, 2013. ISBN: 978-0-415-52544-2.

[4] Chris R. Smaill et al. "An Investigation Into the Understanding and Skills of First-Year Electrical Engineering Students." In: *IEEE Transactions on Education* 55.1 (Feb. 2012). ISSN: 0018-9359, 1557-9638. DOI: 10.1109/TE.2011.2114663. URL: http://ieeexplore.ieee.org/document/5722055/ (visited on 08/18/2025).

[5] Julian Fraillon, ed. *An International Perspective on Digital Literacy: Results from ICILS 2023*. Cham: Springer, 2024. ISBN: 978-3-031-87721-6. DOI: 10.1007/978-3-031-87722-3. URL: https://link.springer.com/book/10.1007/978-3-031-87722-3 (visited on 09/20/2025).

[6] Open Source Hardware Association. *Open Source Hardware (OSHW) Definition 1.0 Open Source Hardware Association*. 2010. URL: https://freedomdefined.org/OSHW (visited on 09/20/2025).

[7] Ruben Heradio et al. "Open-Source Hardware in Education: A Systematic Mapping Study." In: *IEEE Access* 6 (2018). ISSN: 2169-3536. DOI: 10.1109/ACCESS.2018.2881929. URL: https://ieeexplore.ieee.org/document/8537888/ (visited on 09/20/2025).

[8] A. Masa, R. A. Rafael, and K. H. Recto. "Impacts of Open-source Hardware Movements on Electronics Engineering Educational Outcomes." In: *IECEP Journal* 6 (Mar. 1, 2024). URL: https://www.iecepjournal.com/archives/paper/65e303cfd03e7ede7ff01d55 (visited on 09/20/2025).

[9] Mannu Lambrichts et al. "A Survey and Taxonomy of Electronics Toolkits for Interactive and Ubiquitous Device Prototyping." In: *Proceedings of the ACM on Interactive, Mobile, Wearable and Ubiquitous Technologies* 5.2 (June 23, 2021). ISSN: 2474-9567. DOI: 10.1145/3463523. URL: https://dl.acm.org/doi/10.1145/3463523 (visited on 09/20/2025).

[10] International Organization for Standardization International Electrotechnical Commission. *Using and referencing ISO and IEC standards to support public policy.* 2014. URL: https://www.iso.org/publication/PUB100358.html (visited on 09/20/2025).

[11] European Committee for Electrotechnical Standardization. *European Standardization.* 2012. URL: https://www.cencenelec.eu/european-standardization/european-standards/ (visited on 09/20/2025).

[12] Paul Horowitz and Winfield Hill. *The art of electronics.* Third edition, 20th printing with corrections. Cambridge, New York: Cambridge University Press, 2024. 1230 pp. ISBN: 978-0-521-80926-9.

[13] *T-1 3/4 (5mm) LOW CURRENT LED LAMPS.* L-53LI, L-53LG, L-53LY. KINGBRIGHT. URL: https://cdn-reichelt.de/documents/datenblatt/A500/LED5MM2MAGE_LED5MM2MAGN_LED5MM2MART~KIN.pdf (visited on 09/20/2025).

[14] *Arbitrary Power Supply HM8143 Handbuch / Manual.* HM8143. HAMEG Instruments. 2006. URL: https://cdn-reichelt.de/documents/datenblatt/D150/HM8143_Manuel.pdf (visited on 09/20/2025).

[15] Analog Devices. *LTSpice.* 2025. URL: https://www.analog.com/en/resources/design-tools-and-calculators/ltspice-simulator.html (visited on 09/20/2025).

[16] Mike Robbins and Humberto Evans. *CircuitLab.* 2025. URL: https://www.circuitlab.com (visited on 09/20/2025).

[17] Paul Falstad. *Falstad Circuit Simulator Applet.* 2025. URL: https://www.falstad.com/circuit (visited on 09/20/2025).

[18] Jean Pierre Charras. *KiCad.* 2025. URL: https://www.kicad.org/download/ (visited on 09/20/2025).

[19] C.T. Obe et al. "A low-cost printed circuit board design technique and processes using ferric chloride solution." In: *Nigerian Journal of Technology* 39.4 (Mar. 24, 2021). ISSN: 2467-8821, 0331-8443. DOI: 10.4314/njt.v39i4.31. URL: https://www.ajol.info/index.php/njt/article/view/205009 (visited on 09/20/2025).

[20] *Universal Serial Bus Specification.* USB 2.0. USB Implementers Forum. 2000. URL: https://www.usb.org/document-library/usb-20-specification (visited on 09/20/2025).

[21] *Universal Serial Bus Type-C Cable and Connector Specification.* USB Type-C. Release 2.4. USB Implementers Forum. 2024. URL: https://www.usb.org/document-library/usb-type-cr-cable-and-connector-specification-release-24 (visited on 09/20/2025).

[22] *L-7113QBDL-D T-1 3/4 (5mm) Solid State Lamp*. L-7113QBDL-D. VER. 7B. KINGBRIGHT. 2018. URL: https://cdn-reichelt.de/documents/datenblatt/A500/L-7113QBDL-D(VER.7B).pdf (visited on 09/20/2025).

[23] *N-Channel 60-V (D-S) MOSFET*. BS170. Rev. F. Vishay Siliconix. 2001. URL: https://www.alldatasheet.com/html-pdf/627347/VISHAY/BS170/214/1/BS170.html (visited on 09/20/2025).

[24] *P-Channel 60-V (D-S) MOSFET*. BS250. Rev. H. Vishay Siliconix. 2004. URL: https://www.alldatasheet.jp/datasheet-pdf/view/86995/VISHAY/BS250.html (visited on 09/20/2025).

[25] *MCP6001/1R/1U/2/4, 1 MHz, Low-Power Op Amp*. MCP6002. Rev. L. Microchip Technology Inc. 2020. URL: https://ww1.microchip.com/downloads/aemDocuments/documents/MSLD/ProductDocuments/DataSheets/MCP6001-1R-1U-2-4-1-MHz-Low-Power-Op-Amp-DS20001733L.pdf (visited on 09/20/2025).

[26] *Water Sensor Module User's Manual*. K-0135. DIY Robot Keyes. 2013. URL: https://curtocircuito.com.br/datasheet/sensor/nivel_de_agua_analogico.pdf (visited on 09/20/2025).

[27] *GL55 Series Photoresistor*. GL5516. CdS Photoresistor Manual. URL: https://www.alldatasheet.com/datasheet-pdf/view/1131892/ETC2/GL5516.html (visited on 09/20/2025).

[28] Jonas Gruska. *Elektrosluch-DIY*. 2016. URL: https://github.com/LOM-instruments/Elektrosluch-DIY (visited on 09/20/2025).

[29] *xx555 Precision Timers*. NE555. Revised February 2025. Texas Instruments. 1973. URL: https://www.ti.com/lit/ds/symlink/ne555.pdf (visited on 09/20/2025).

[30] Forrest M Mims. *Engineer's Mini-Notebook: 555 Circuits*. Radio Shack, 1984.