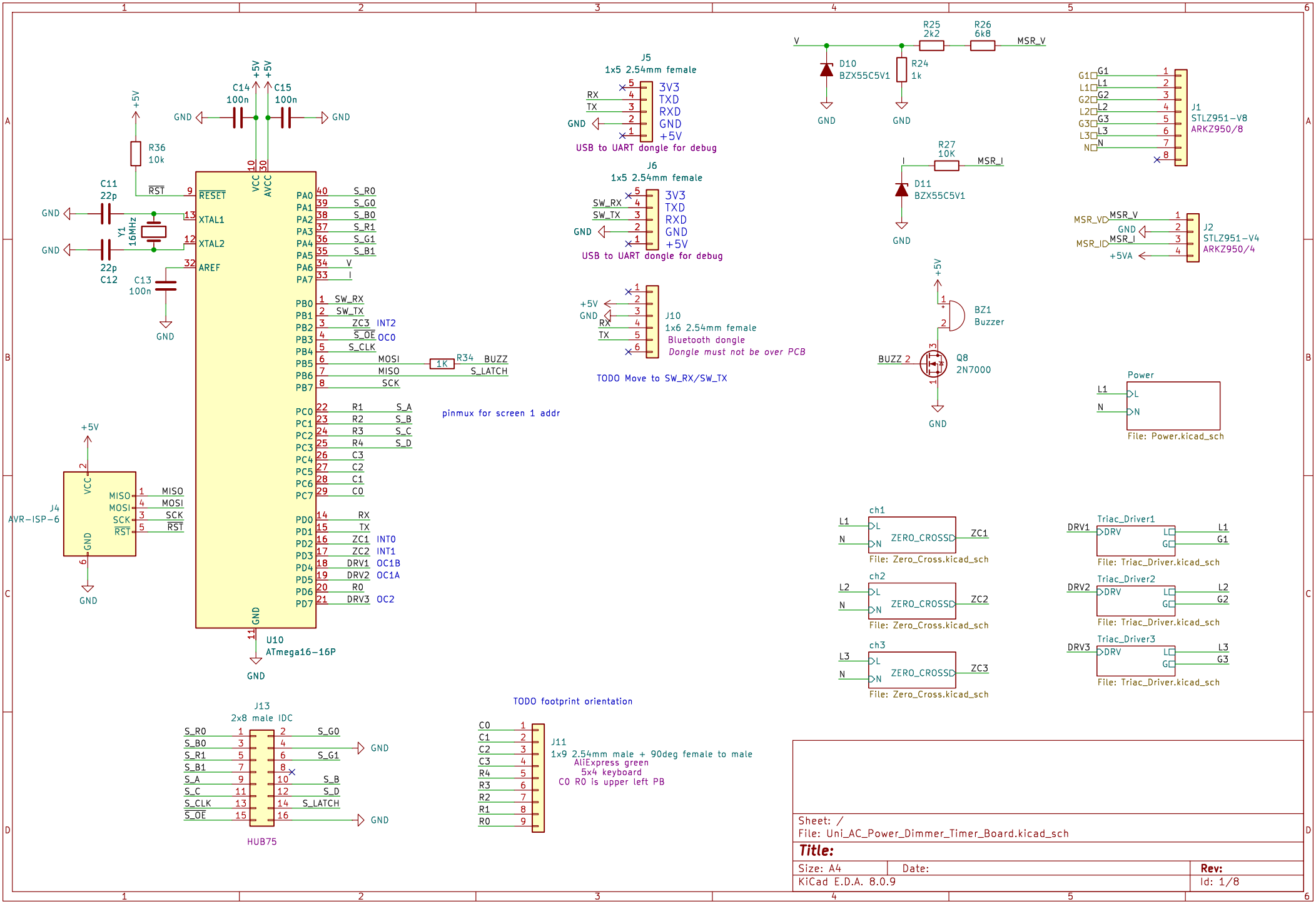
U10
ATmega16-16P
RESET
XTAL1
XTAL2
AREF
VCC
AVCC
GND
PA0 S_R0
PA1 S_G0
PA2 S_B0
PA3 S_R1
PA4 S_G1
PA5 S_B1
PA6 V
PA7 I
PB0 SW_RX
PB1 SW_TX
PB2 ZC3 INT2
PB3 S_OE OC0
PB4 S_CLK
PB5 MOSI
PB6 MISO
PB7 SCK
PC0 R1 S_A
PC1 R2 S_B
PC2 R3 S_C
PC3 R4 S_D
PC4 C3
PC5 C2
PC6 C1
PC7 C0
PD0 RX
PD1 TX
PD2 ZC1 INT0
PD3 ZC2 INT1
PD4 DRV1 OC1B
PD5 DRV2 OC1A
PD6 R0
PD7 DRV3 OC2
C11 22p
C12 22p
Y1 16MHz
C13 100n
C14 100n
C15 100n
R36 10k
R34 1K
BUZZ
S_LATCH
pinmux for screen 1 addr
J4
AVR-ISP-6
MISO
MOSI
SCK
RST
J5
1x5 2.54mm female
3V3
TXD
RXD
GND
+5V
USB to UART dongle for debug
J6
1x5 2.54mm female
SW_RX
SW_TX
USB to UART dongle for debug
J10
1x6 2.54mm female
Bluetooth dongle
Dongle must not be over PCB
TODO Move to SW_RX/SW_TX
R25 2k2
R26 6k8
MSR_V
D10 BZX55C5V1
R24 1k
R27 10K
MSR_I
D11 BZX55C5V1
J1
STLZ951-V8
ARKZ950/8
J2
STLZ951-V4
ARKZ950/4
MSR_VD
MSR_ID
+5VA
BZ1
Buzzer
Q8
2N7000
Power
File: Power.kicad_sch
ch1
ZERO_CROSS
ZC1
File: Zero_Cross.kicad_sch
ch2
ZC2
ch3
ZC3
Triac_Driver1
Triac_Driver2
Triac_Driver3
DRV
File: Triac_Driver.kicad_sch
J13
2x8 male IDC
HUB75
TODO footprint orientation
J11
1x9 2.54mm male + 90deg female to male
AliExpress green
5x4 keyboard
C0 R0 is upper left PB
Sheet: /
File: Uni_AC_Power_Dimmer_Timer_Board.kicad_sch
Title:
Size: A4
Date:
Rev:
KiCad E.D.A. 8.0.9
Id: 1/8

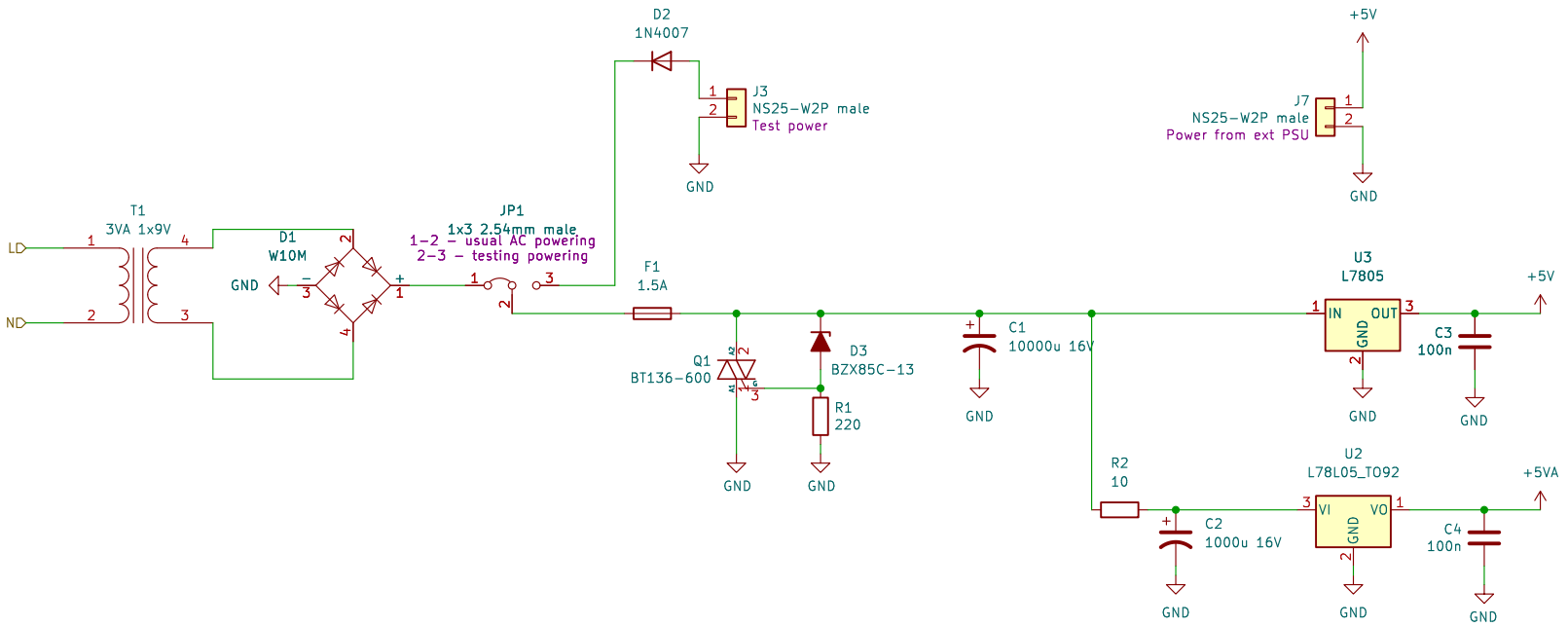

Sheet: /Power/
File: Power.kicad_sch

Title:

Size: A4	Date:	Rev:
KiCad E.D.A. 8.0.9		Id: 2/8

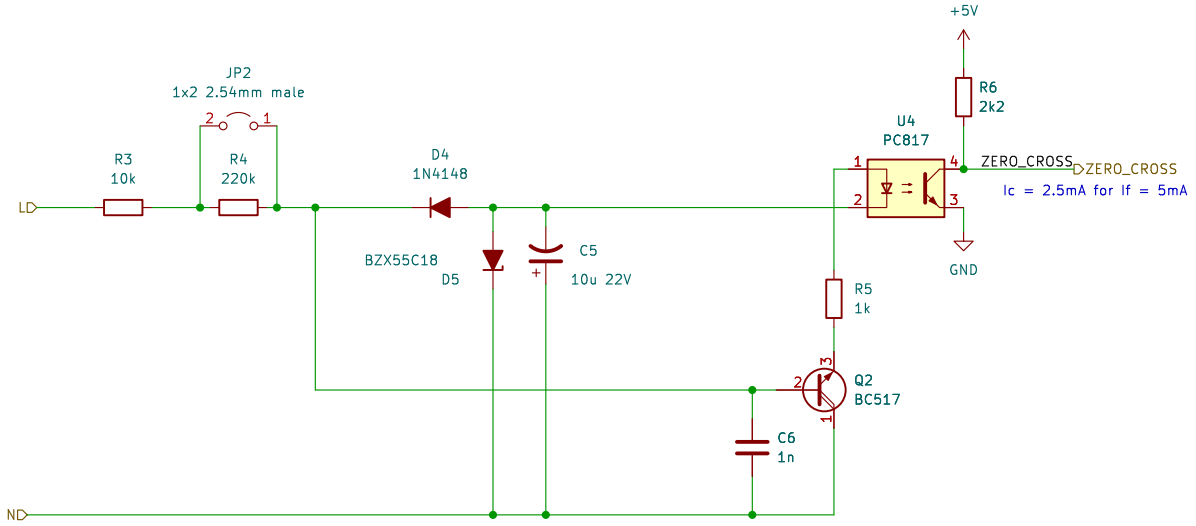

Sheet: /ch1/
File: Zero_Cross.kicad_sch

Title:

Size: A4	Date:	Rev:
KiCad E.D.A. 8.0.9		Id: 3/8

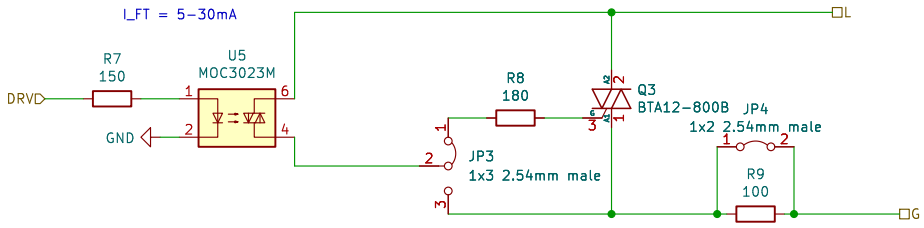

Sheet: /Triac_Driver1/
File: Triac_Driver.kicad_sch

Title:

Size: A4	Date:	Rev:
KiCad E.D.A. 8.0.9		Id: 4/8

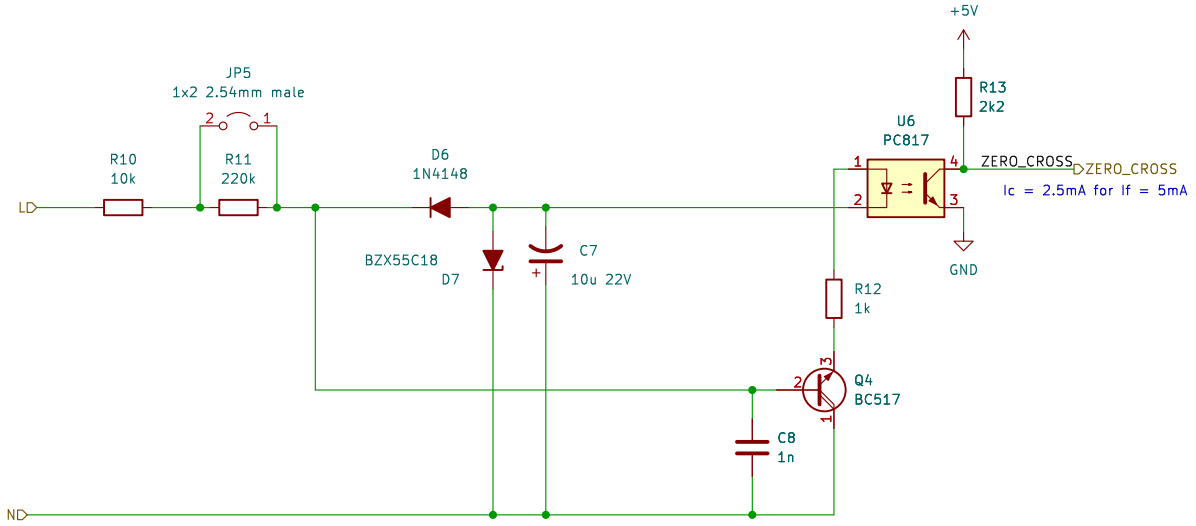

Sheet: /ch2/
File: Zero_Cross.kicad_sch

Title:

Size: A4	Date:	Rev:
KiCad E.D.A. 8.0.9		Id: 5/8

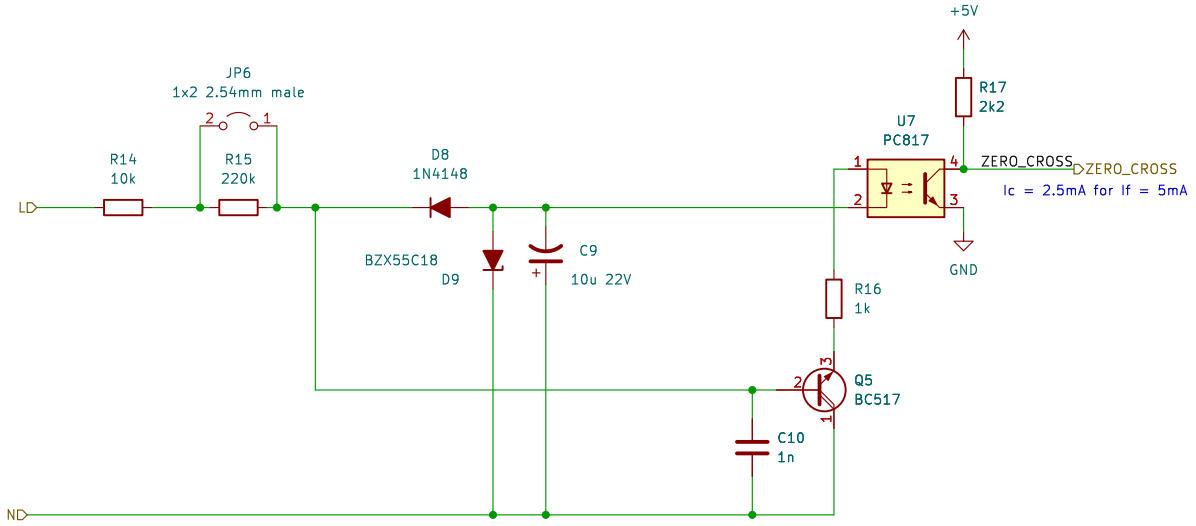

Sheet: /ch3/
File: Zero_Cross.kicad_sch

Title:

Size: A4	Date:	Rev:
KiCad E.D.A. 8.0.9		Id: 6/8

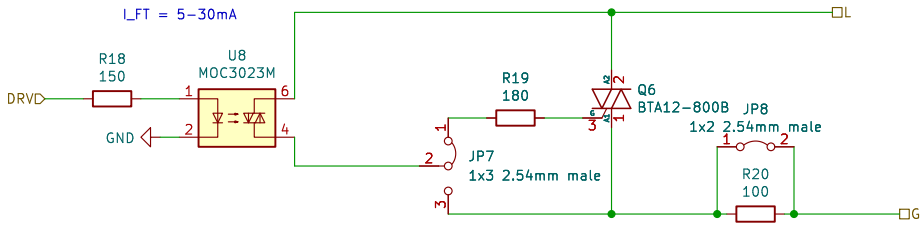

Sheet: /Triac_Driver2/
File: Triac_Driver.kicad_sch

Title:

Size: A4	Date:	Rev:
KiCad E.D.A. 8.0.9		Id: 7/8

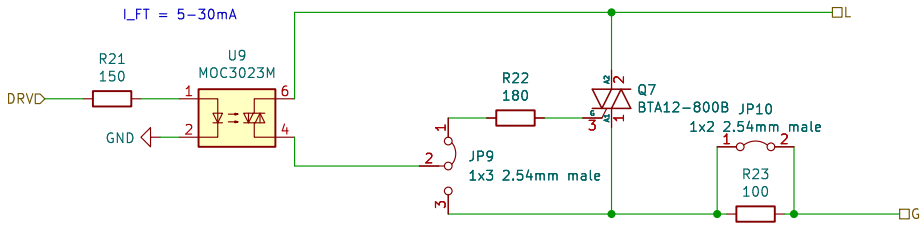

Sheet: /Triac_Driver3/
File: Triac_Driver.kicad_sch

Title:

Size: A4	Date:	Rev:
KiCad E.D.A. 8.0.9		Id: 8/8