TEC-1G

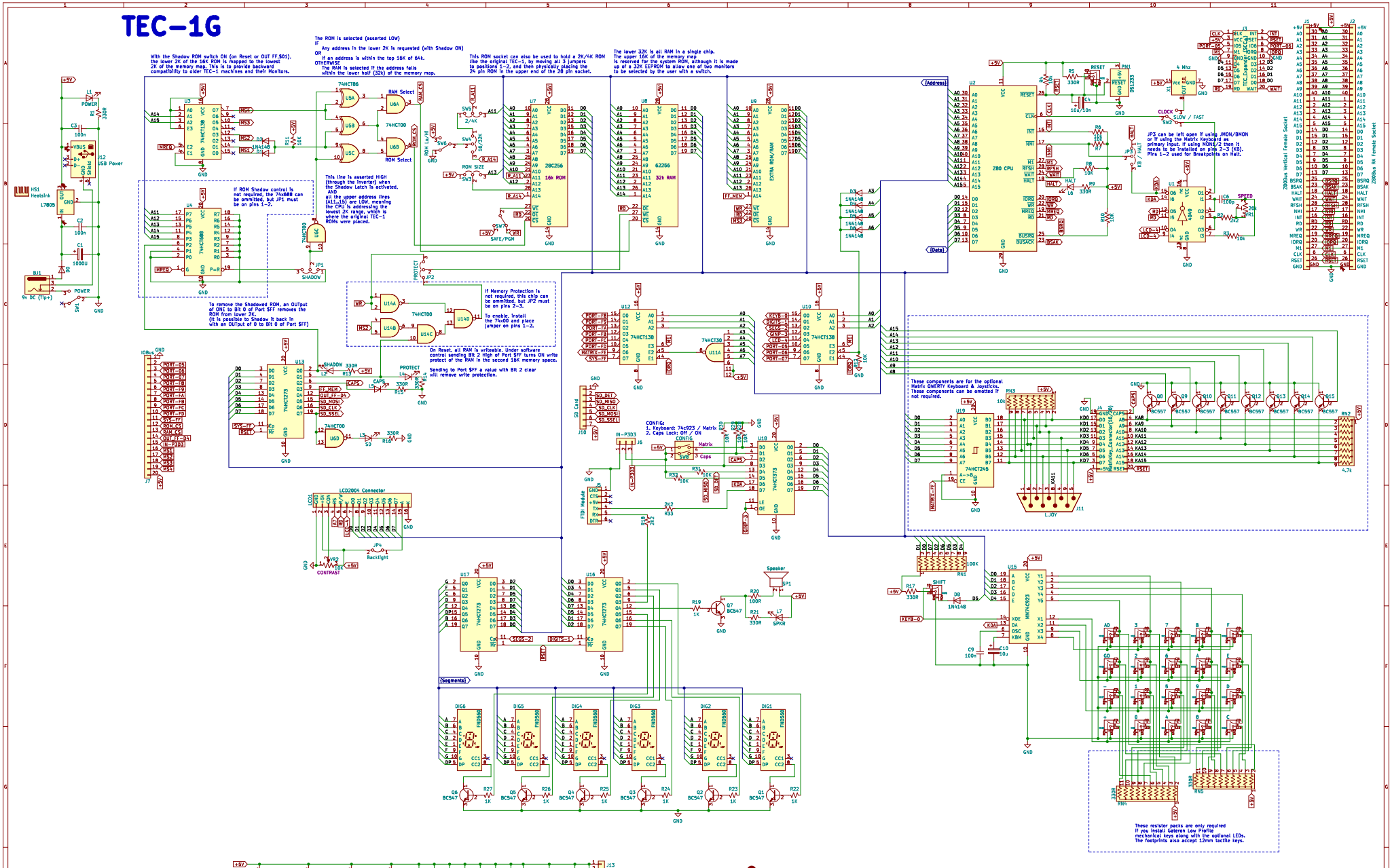
With the Shadow ROM switch ON (on Reset or OUT FF,$01), the lower 2K of the 16K ROM is mapped to the lowest 2K of the memory map. This is to provide backward compatibility to older TEC-1 machines and their Monitors.
The ROM is selected (asserted LOW) IF Any address in the lower 2K is requested (with Shadow ON) OR if an address is within the top 16K of 64k. OTHERWISE The RAM is selected if the address falls within the lower half ($32k) of the memory map.
This ROM socket can also be used to hold a 2K/4K ROM like the original TEC-1, by moving all 3 jumpers to positions 1-2, and then physically placing the 24 pin ROM in the upper end of the 28 pin socket.
The lower 32K is all RAM in a single chip. The upper 16K of the memory map is reserved for the system ROM, although it is made up of a 32K EEPROM to allow one of two monitors to be selected by the user with a switch.
This line is asserted HIGH (through the Inverter) when the Shadow Latch is activated. AND all the upper address lines (A11..15) are LOW, meaning the CPU is addressing the lowest 2K range, which is where the original TEC-1 ROMs were placed.
If ROM Shadow control is not required, the 74ut888 can be ommitted, but JP1 must be on pins 1-2.
To remove the Shadowed ROM, an OUTput of ONE to Bit 0 of Port $FF removes the ROM from lower 2K. (It is possible to Shadow it back in with an OUTput of 0 to Bit 0 of Port $FF)
If Memory Protection is not required, this chip can be ommitted, but JP2 must be on pins 2-3.
To enable, Install the 74u00 and place jumper on pins 1-2.
On Reset, all RAM is writeable. Under software control sending Bit 2 High of Port $FF turns ON write protect of the RAM in the second 16K memory space.
Sending to Port $FF a value with Bit 2 clear will remove write protection.
CONFIG:
1. Keyboard: 74c923 / Matrix
2. Caps Lock: Off / ON
These components are for the optional Matrix QWERTY Keyboard & Joystick. These components can be omotted if not required.
These resistor packs are only required if you install Cateron Low Profile mechanical keys along with the optional LEDs. The footprints also accept 12mm tactile keys.
JP3 can be left open if using JMON/BMON or if using the Matrix Keyboard as primary input. If using MON1/2 then it needs to be installed on pins 2-3 (K3). Pins 1-2 used for Breakpoints on Halt.
Modelled on the TEC-1 rev.D with DAT add-on
Originally designed by John Hardy, Ken Stone & Jim Robertson
published in Talking Electronics Magazine. 1983 - 1985
Thanks for assistance from: Craig Hart, Brian Chiha, Ian McLean
© Mark Jelic - 2023
Sheet: /
File: TEC-1G.kicad_sch
Title: TEC-1G
Size: A2
Date: 2023-07-15
Rev: 1.1
KiCad E.D.A. kicad (6.0.10)
Id: 1/1