ESP8266 (ESP-01S)

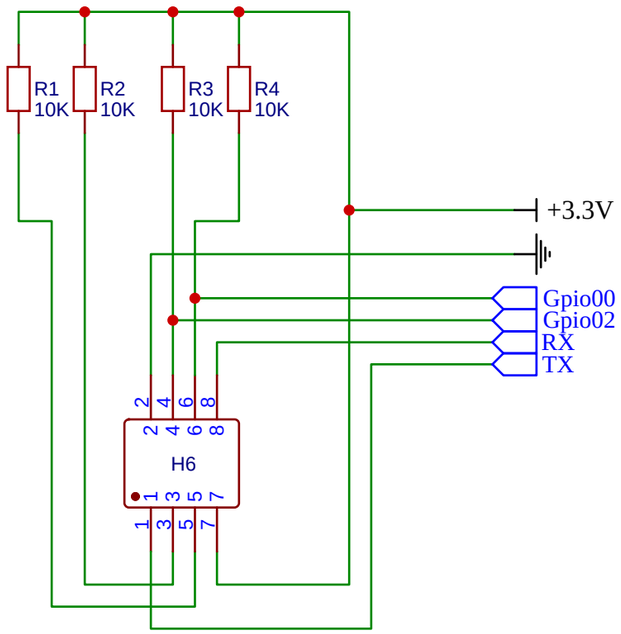

Connections

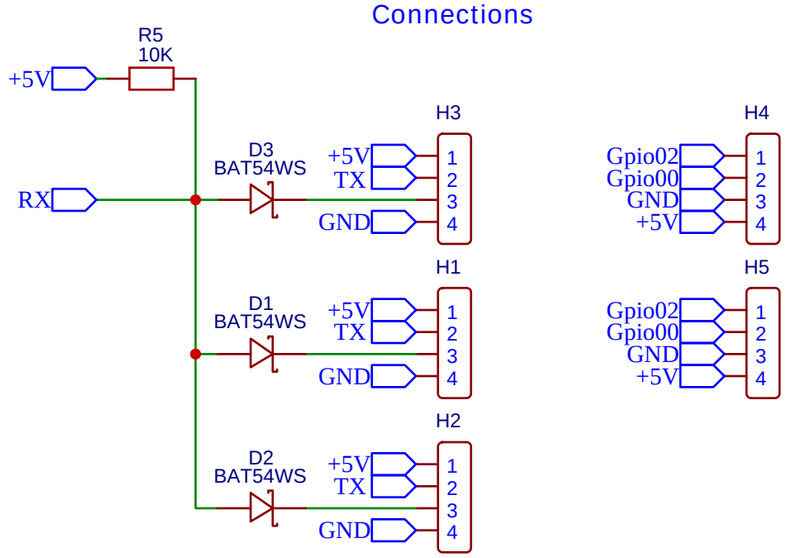

Power regulator

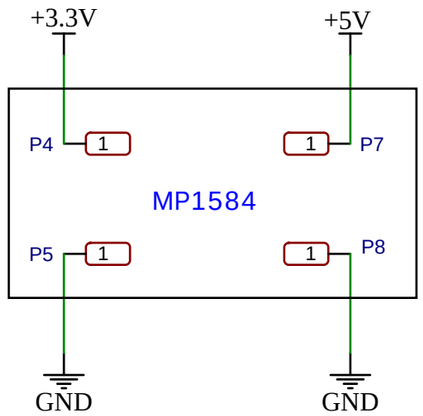

Power supply

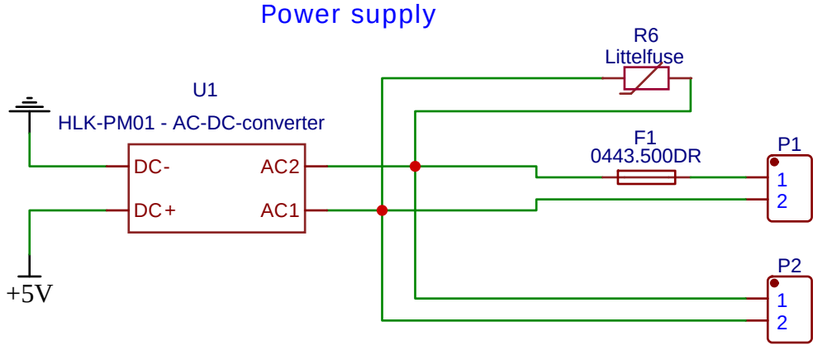

TITLE: x1 PZEM (ESP-01S + LCD2004)		REV: 3.4
EasyEDA	Company: WPM control boards	Sheet: 1/1
	Date: 2020-08-30 Drawn By: TrDA	