Content

- Principle of I/O hardware:
- I/O devices
- Types of I/O device
- Device controllers
- Direct memory access(DMA)
- Direct memory access controller

I/O devices

- I/O devices are the pieces of hardware used by a human (or other system) to communicate with a computer. For instance, a keyboard or computer mouse is an input device for a computer, while monitors and printers are output devices.

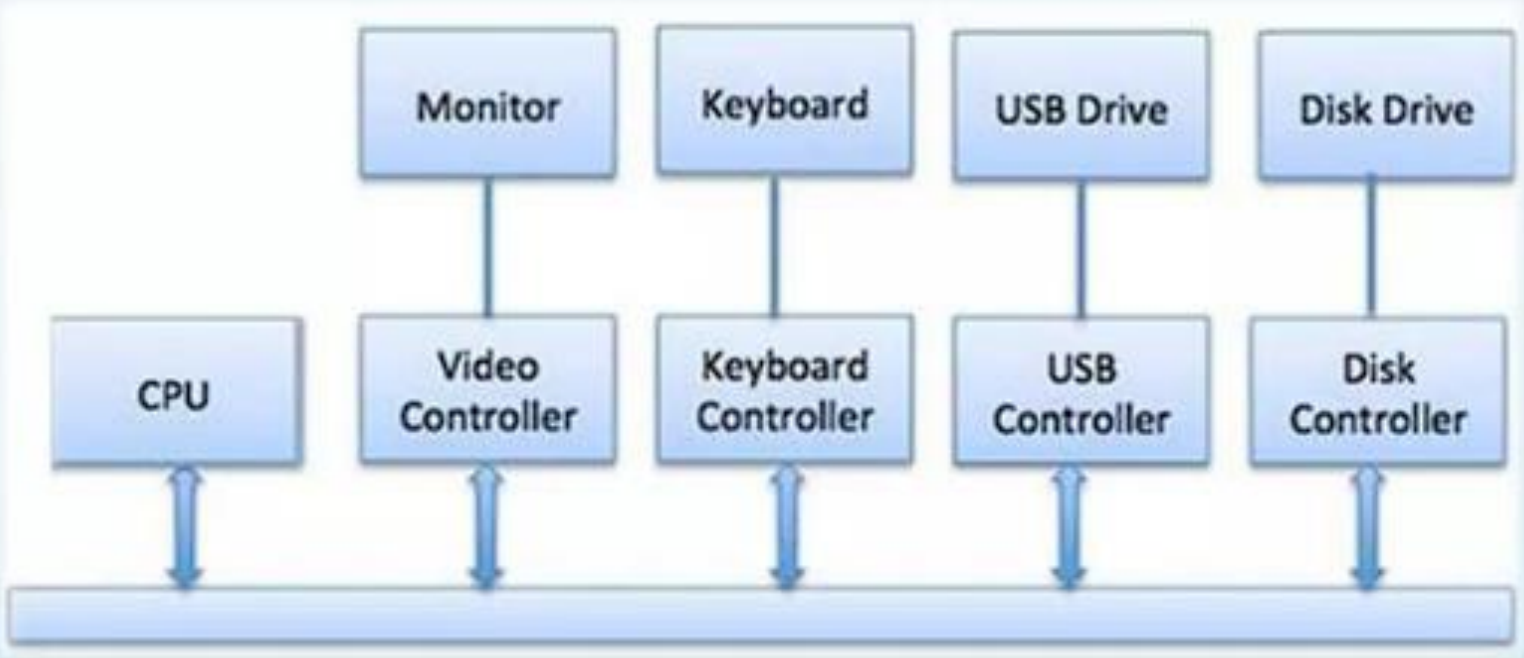

I/O devices(Cont…)

- I/O device are divided into two categories:

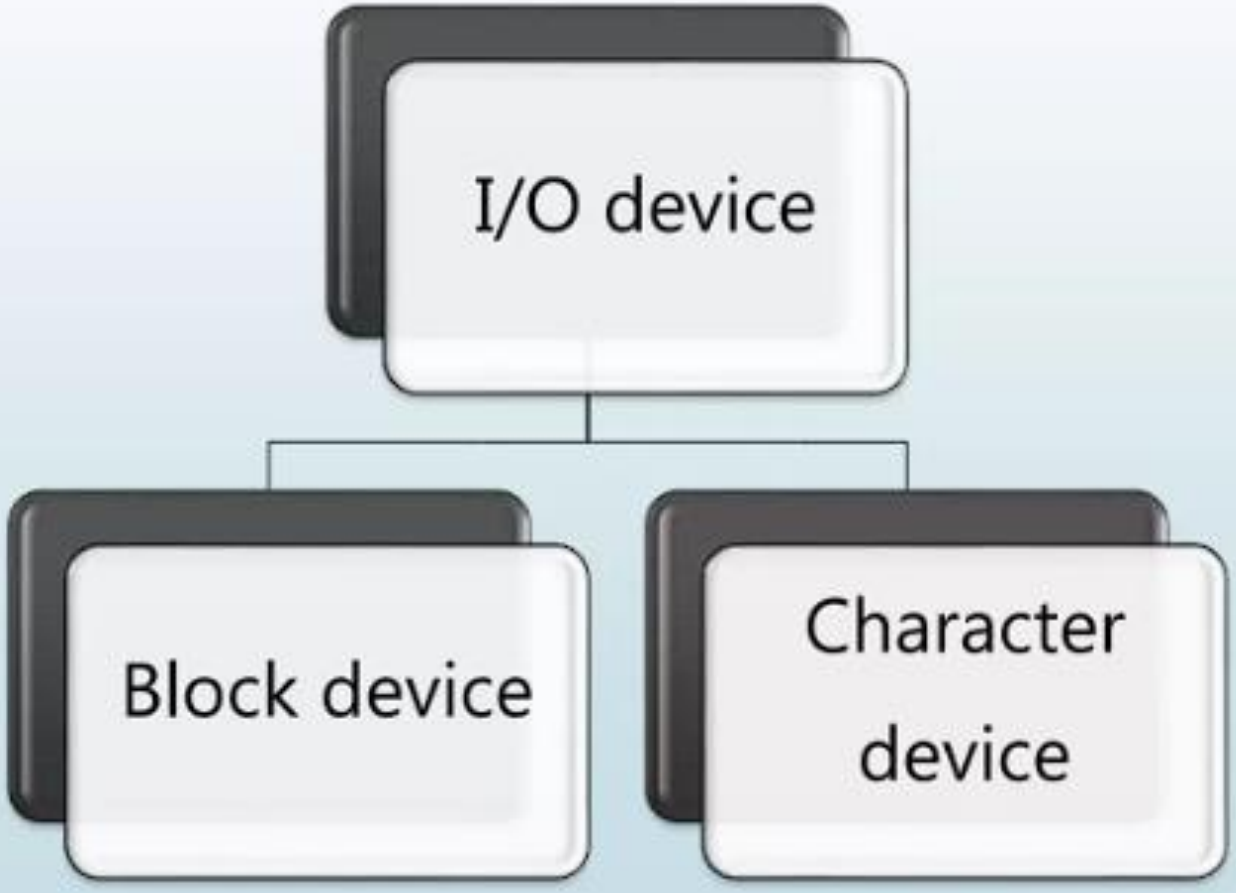

Block device

- A block device is one that stores information in fixed-size blocks, each one with its own address.
- Common block size range from 512 bytes to 32,768 bytes.
- All transfers are in units of one or more entire blocks.
- Possible to read or write each block independently of ail the other ones.
- Examples :- hard disks, CD-ROMs, USB etc…

Character device

- A character device delivers or accepts a stream of characters, without regard to any block structure.
- It is not addressable and does not have any seek operation.
- Printers, network interfaces, mice(for pointing), rats(for psychology lab experiments), and most other devices that are not disk-like can be seen as character devices.
- Example : serial ports, parallel ports, sounds cards etc…

Difference between block and character devices

Block	Character
Block Device are hardware devices which randomly access fixed-sized chunks of data.	Character devices are accessed as a stream of sequential data, one byte after another.
Seeking is possible.	Seeking is not allowed.
Reads and write done by buffer cache mechanism by bread(), bwrite().These request may be asynchronous	The read() and write() calls do not return until the operation is complete.
More complex than character driver.	Less complex than block driver.
The kernel does have to provide an entire subsystem to block device.	The kernel doesn't have to provide an entire subsystem to the character device.
Eg: Hard disk, Pen drive	Eg: Keyboard device, serial port.

Device controller

- I/O units typically consist of a mechanical component and an electronic component.
- The Device Controller works like an interface between a device and a device driver. I/O units (Keyboard, mouse, printer, etc.) typically consist of a mechanical component and an electronic component where electronic component is called the device controller.

- Any device connected to the computer is connected by a plug and socket, and the socket is connected to a device controller.
- Following is a model for connecting the CPU, memory, controllers, and I/O devices where CPU and device controllers all use a common bus for communication.

- Graphically representation of device controller

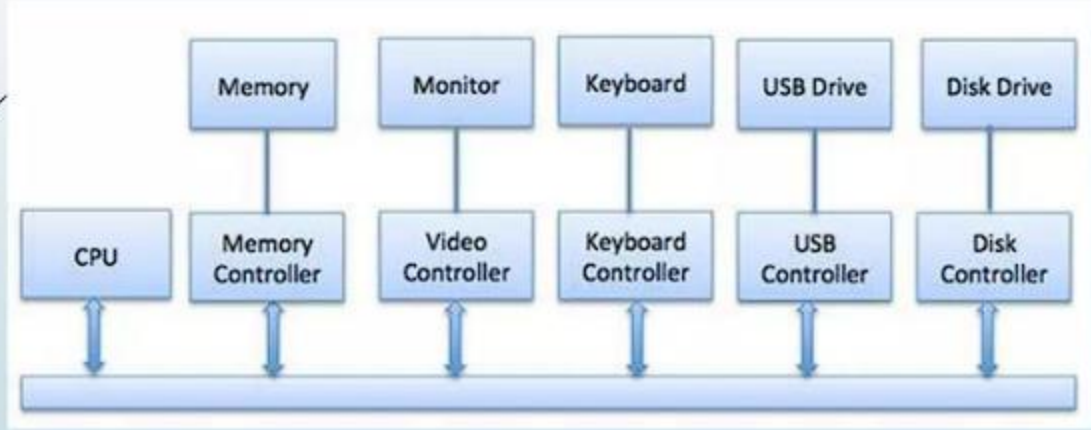

Direct memory access

- Slow devices like keyboards will generate an interrupt to the main CPU after each byte is transferred. If a fast device such as a disk generated an interrupt for each byte, the operating system would spend most of its time handling these interrupts.
- So a typical computer uses direct memory access (DMA) hardware to reduce this overhead.

- Direct Memory Access (DMA) means CPU grants I/O module authority to read from or write to memory without involvement.
- DMA module itself controls exchange of data between main memory and the I/O device.
- CPU is only involved at the beginning and end of the transfer and interrupted only after entire block has been transferred.

Direct memory access controller

- Direct Memory Access needs a special hardware called DMA controller (DMAC) that manages the data transfers and arbitrates access to the system bus. The controllers are programmed with source and destination pointers (where to read/write the data), counters to track the number of transferred bytes, and settings, which includes I/O and memory types, interrupts and states for the CPU cycles.

Configurations of DMA

- Two Configuration For DMA Transfer:-

1. Single Bus

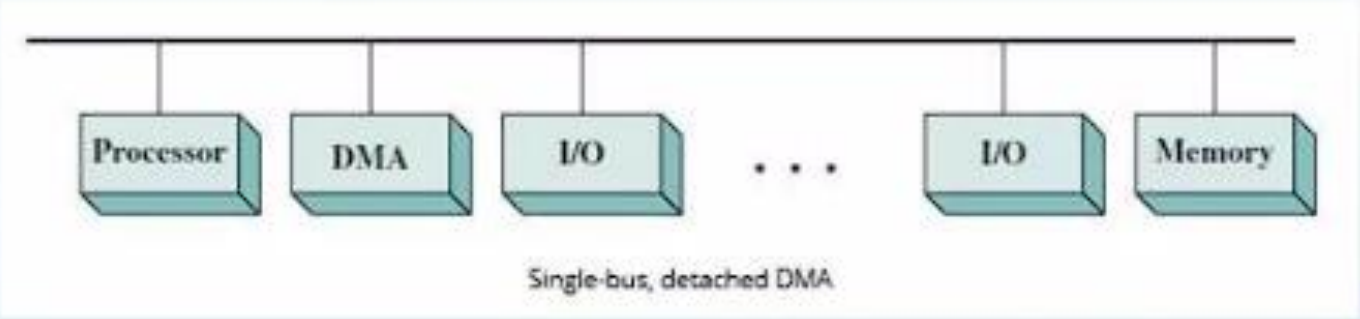

Single-bus, detached DMA

2. I/O Bus

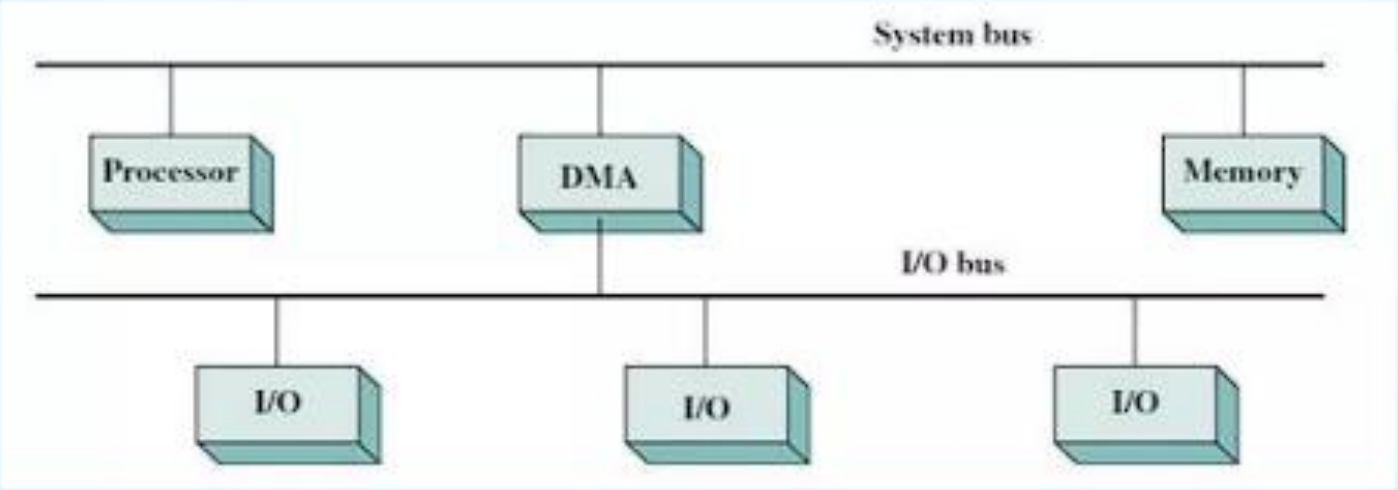

Direct memory access controller (Single Bus)

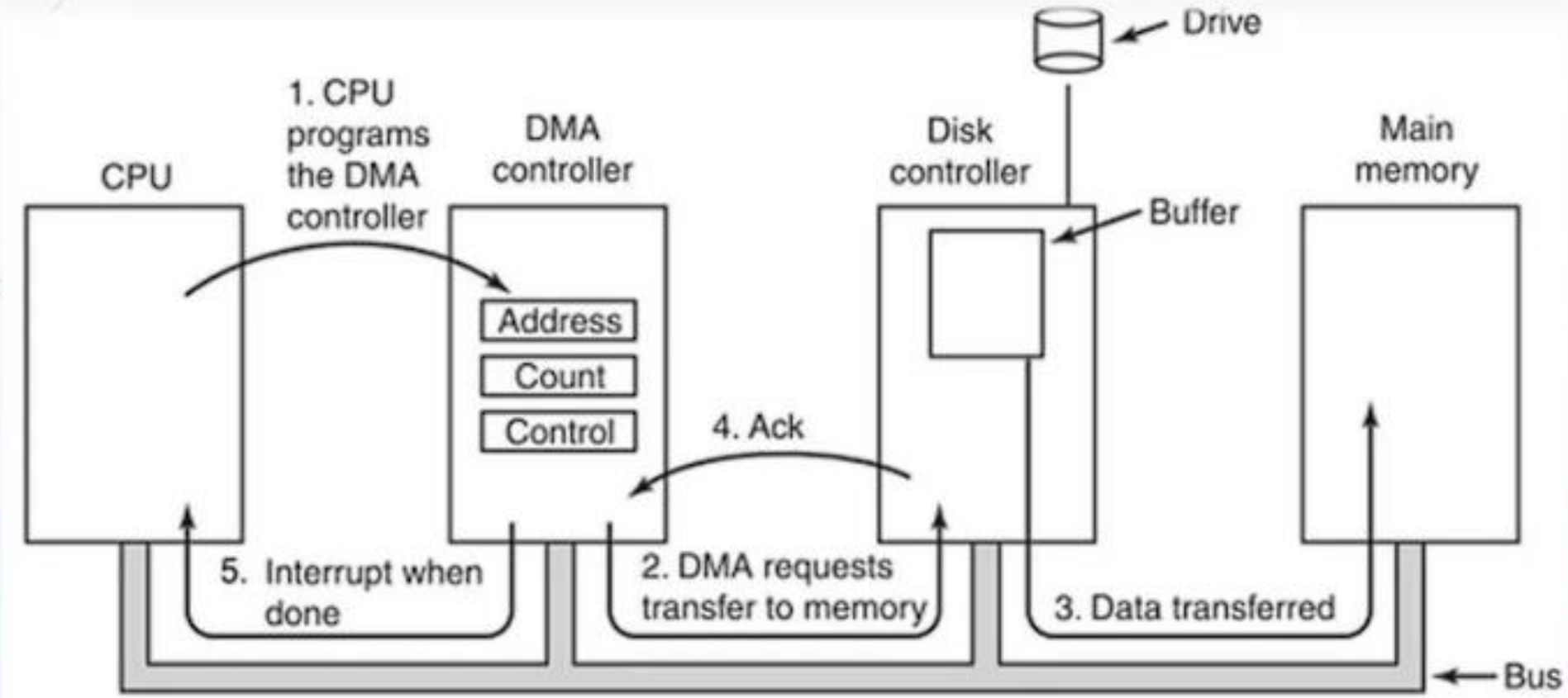

Direct memory access controller (I/O Bus)

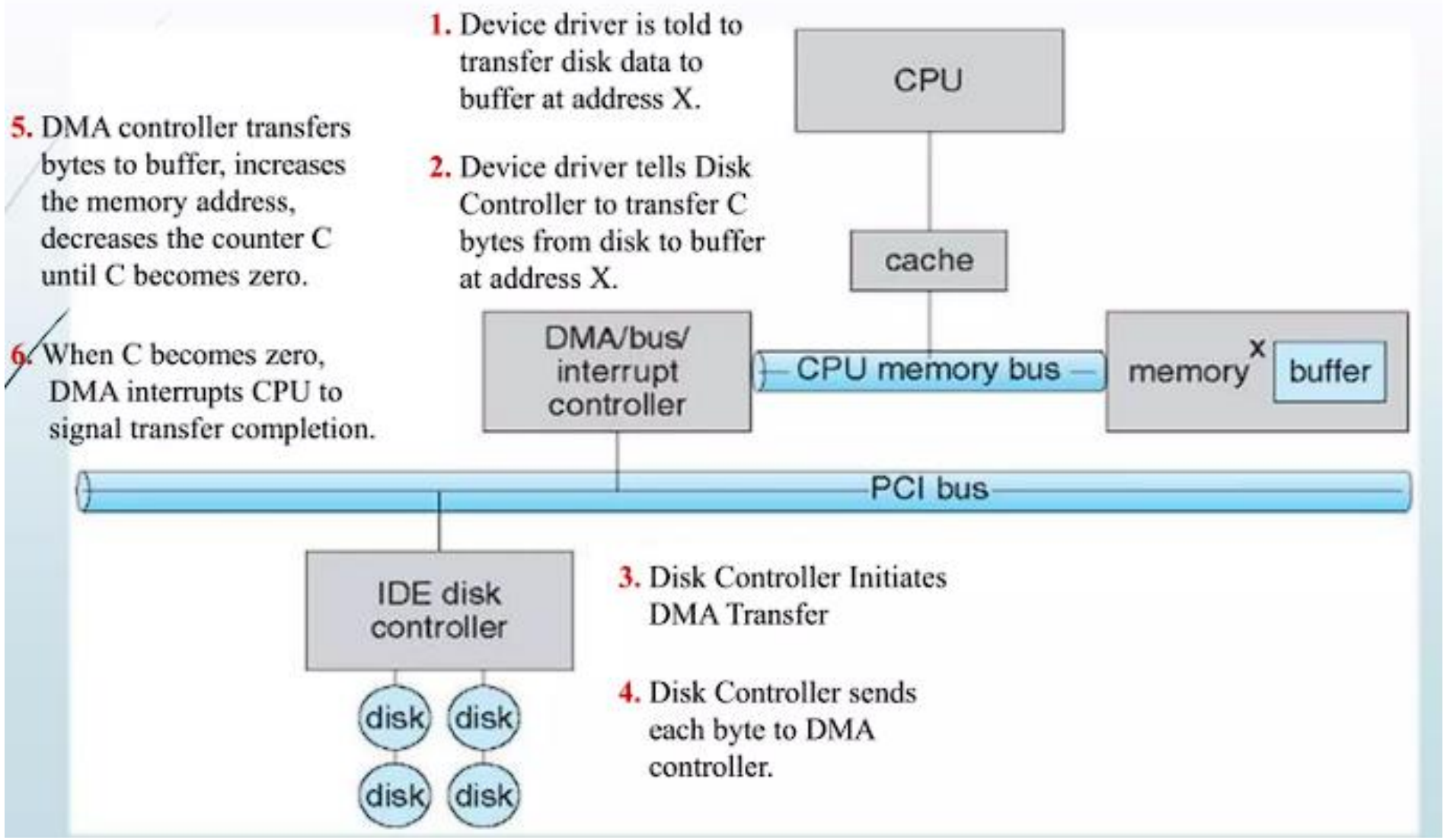

DMA Modes Of Operations

1. Word-at-a-Time Mode

- In this mode, the DMA controller requests the transfer of one word and gets it.
- If the CPU also wants the bus, it has to wait.
- The mechanism is also called "**cycle stealing**" because the device controller sneaks in and steals an occasional bus cycle from the CPU once in a while, delaying it slightly.

DMA Modes Of Operations

2. Block Transfer Mode

- In block transfer mode the DMA is programmed to transfer a block and does not pause or halt until the whole block is transferred irrespective of the requests received meanwhile.
- The DMA retains control of the memory bus for the duration of the memory transfer.
- The negative aspect of operating in this mode is that the CPU will not be able to access the memory bus until the DMA controller completes the memory transfer.

DMA Modes Of Operations

3. Transparent Mode

- In transparent mode, the DMA controller transfers data only when the CPU is performing operations that do not use the system buses.
- The primary advantage of transparent mode is that the CPU never stops executing its programs and the DMA transfer is free in terms of time, while the disadvantage is that the hardware needs to determine when the CPU is not using the system buses, which can be complex.

Advantages & Disadvantages Of DMA

- Advantages :-
  - DMA allows a peripheral device to read from/write to memory without going through the CPU.
  - DMA allows for faster processing since the processor can be working on something else while the peripheral can be populating memory.
- Disadvantages :-
  - requires a DMA controller to carry out the operation, which increases the cost of the system.
  - Cache Coherency.