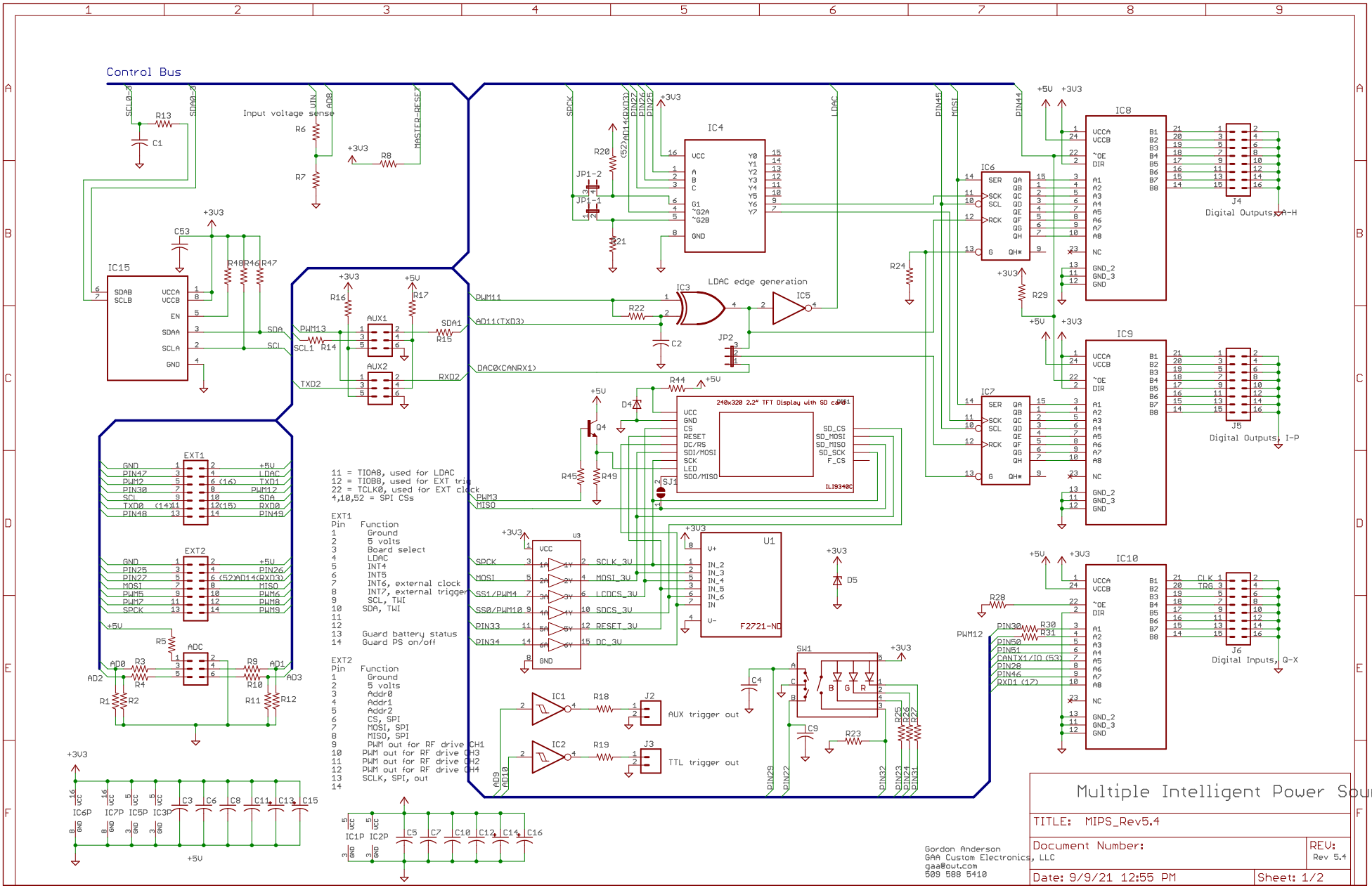
Control Bus
Input voltage sense
IC15
IC4
IC3
LDAC edge generation
IC5
IC6
IC7
IC8
IC9
IC10
J4
Digital Outputs, A-H
J5
Digital Outputs, I-P
J6
Digital Inputs, Q-X
AUX1
AUX2
EXT1
EXT2
ADC
240x320 2.2" TFT Display with SD card
ILI9340C
U1
F2721-ND
U3
SW1
J2
AUX trigger out
J3
TTL trigger out
11 = TIOA8, used for LDAC
12 = TIOB8, used for EXT trig
22 = TCLK0, used for EXT clock
4,10,52 = SPI CSs
EXT1
Pin Function
1 Ground
2 5 volts
3 Board select
4 LDAC
5 INT4
6 INT5
7 INT6, external clock
8 INT7, external trigger
9 SCL, TWI
10 SDA, TWI
11
12
13 Guard battery status
14 Guard PS on/off
EXT2
Pin Function
1 Ground
2 5 volts
3 Addr0
4 Addr1
5 Addr2
6 CS, SPI
7 MOSI, SPI
8 MISO, SPI
9 PWM out for RF drive CH1
10 PWM out for RF drive CH3
11 PWM out for RF drive CH2
12 PWM out for RF drive CH4
13 SCLK, SPI, out
14
Gordon Anderson
GAA Custom Electronics, LLC
gaa@out.com
509 588 5410
Multiple Intelligent Power Sources
TITLE: MIPS_Rev5.4
Document Number:
REV: Rev 5.4
Date: 9/9/21 12:55 PM
Sheet: 1/2

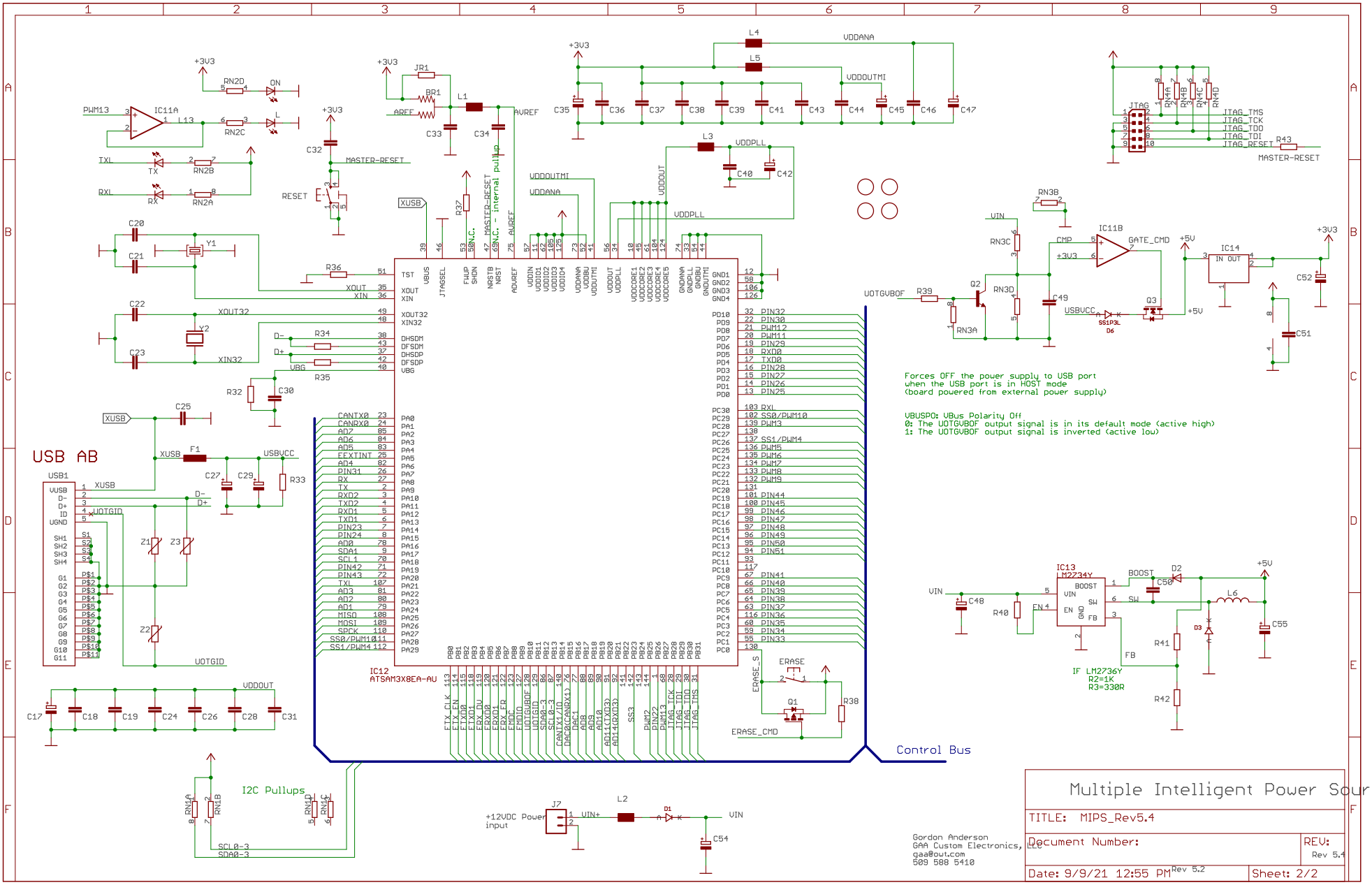
USB AB
IC12
ATSAM3X8EA-AU
Control Bus
I2C Pullups
+12VDC Power input
Forces OFF the power supply to USB port when the USB port is in HOST mode (board powered from external power supply)
VBUSPO: VBus Polarity Off
0: The UOTGVBOF output signal is in its default mode (active high)
1: The UOTGVBOF output signal is inverted (active low)
IF LM2736Y
R2=1K
R3=330R
Gordon Anderson
GAA Custom Electronics, LLC
gaa@owt.com
509 588 5410
Multiple Intelligent Power Sources
TITLE: MIPS_Rev5.4
Document Number:
REV: Rev 5.4
Date: 9/9/21 12:55 PM
Rev 5.2
Sheet: 2/2