Level Detection Module

Operations Manual
Rev 1.2 , Dec 23, 2024

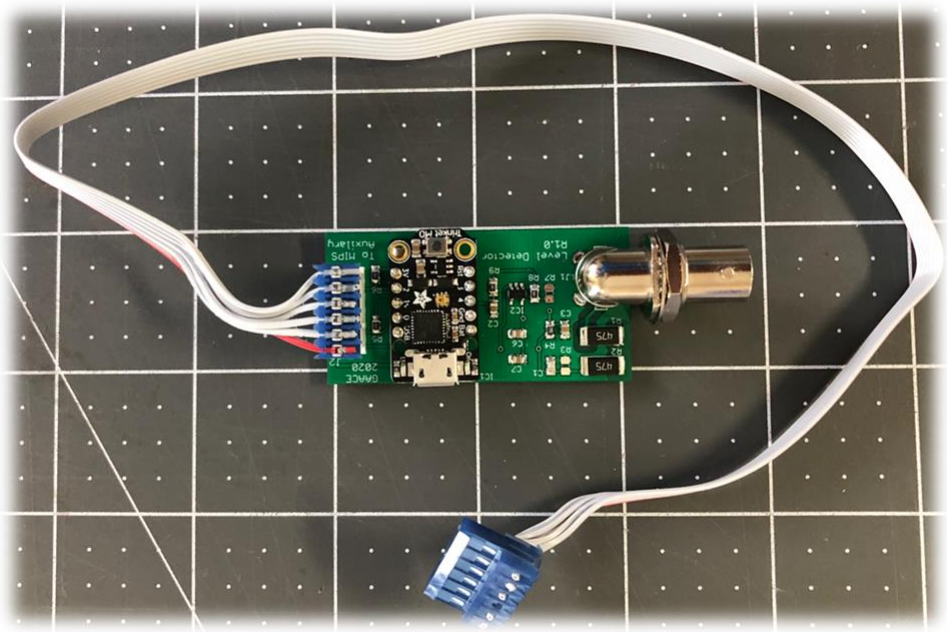

GAA Custom Electronics, LLC
www.GAACustom.com
gaa@owt.com

2024, All Rights Reserved.

NOTICE: All information contained herein is, and remains the property of GAA Custom Electronics, LLC, The intellectual and technical concepts contained herein are proprietary to GAA Custom Electronics, LLC and are protected by trade secret or copyright law. Dissemination of this information or reproduction of this material is strictly forbidden unless prior written permission is obtained from GAA Custom Electronics, LLC.

Introduction:

The Level Detection Module (LDM) is a MIPS system option that enables the detection of an analog voltage and subsequently generates MIPS signals representing the change in this detected voltage. The LDM features a BNC input connector to accept an external signal, which is buffered and detected by an ARM M0 microcontroller embedded within the LDM. The LDM communicates with the MIPS controller via the Auxiliary connector, a multi-pin connector that provides both signal interface and power to the LDM.

Typically, the LDM module is installed in your MIPS system during purchase. However, if you are upgrading your system, you will need to install the module manually. Detailed installation instructions are provided at the end of this document.

The LDM is designed to monitor an analog value and detect changes. The range of the analog value detection is determined by adjusting component values during the LDM's manufacturing process. There are various configuration options available, so please inform us of your preferences. The LDM module possesses the capability to detect both positive and negative values.

The LDM informs MIPS of any voltage changes detected, and MIPS possesses a series of commands that facilitate the modification of MIPS behavior in response to these changes.

The features of the LDM are listed below:

- Configurable analog input range
- Bipolar signal detection
- Analog signal buffer
- Analog signal filter
- Multiple change detection modes
- Change detection digital filter
- Monitoring of detected value
- Conversion of detected value to engineering units
- Lookup table capability (5 entries)
- TWI interface to MIPS
- Rear panel BNC signal input

The LDM system can be tailored to meet the specific requirements of your application during its fabrication and testing phase. The parameters are stored in the LDM and do not necessitate any field adjustments.

The MIPS commands and configuration options enable users to specify the desired behavior of the Level Detection Module (LDM) on the MIPS architecture. Below is a

description of the supported behaviors and the corresponding MIPS commands to activate these features.

MIPS Change Monitoring

The LDM module enables external voltage monitoring and facilitates communication between the MIPS system and a host computer upon detecting changes. To utilize this feature, execute the following command from the host computer to the MIPS system:

ENALDET,32

The command argument is the TWI address (in hexadecimal) of the LDM. The default address is 32 hexadecimal or 50 decimal. In this case, the value must be entered in hexadecimal format.

Upon detecting a change, MIPS will transmit the following message to the host:

LevelChanged, 0.20,543212

The first argument pertains to the voltage level that triggered the change detection, while the second argument represents a timestamp in milliseconds. The timestamp is reset to 0 upon the restart of MIPS. It is a 32-bit unsigned integer.

Additionally, the following command enables detection and reporting in the window monitoring mode. In this mode, the LDM module monitors the voltage and reports when a voltage change is detected that exceeds a user-defined threshold.

ENAWLDET,32

The command argument is the TWI address (in hexadecimal) of the LDM. The default address is 32 hexadecimal or 50 decimal. In this case, the value must be entered in hexadecimal format.

Upon detecting a change, MIPS will transmit the following message to the host:

LevelChanged, change,543212
Where change is: ABOVE or WITHIN or BELOW

The primary argument addresses the event that triggered the report, while the secondary argument represents a timestamp in milliseconds. Upon the restart of MIPS, the timestamp is reset to 0. It is a 32-bit unsigned integer.

DCbias Output Offset

The LDM can adjust a DCbias modules channel or it can also offset all the DCbias channels. The voltage detected by the LDM is summed with a channels current value allowing you to follow an external voltage. Two MIPS commands support this behavior:

DCBCLDCH,brd,TWIadd

This command will enable changes to one or more channels. The detected value is added to the channel current value that is set by the user. Please note that the SDCBCHMK command, described below, needs to be issued to enable the channels you wish to change.

Where:

brd = The DCbias module number, 0 for first module, 1 for second, etc

TWIadd = The LDM TWI interface address in hex, 32 by default

DCBCLDOF,brd,TWIadd

This command will enable offsetting all channels on the selected DCbias board.

Where:

brd = The DCbias module number, 0 for first module, 1 for second, etc

TWIadd = The LDM TWI interface address in hex, 32 by default

An additional command is needed to tell MIPS the channel or channels you wish to change when you have used the DCBCLDCH command defined above. You can change one or more channels on the selected channel using the following command:

SDCBCHMK,brd,mask

Where:

brd = The DCbias module number, 0 for first module, 1 for second, etc

mask = This is a 8 bit mask in hex used to enable channel(s) you wish to change. The least significant bit in this mask is channel 1, for example if you want to change only channel 1 you would enter 1. Entering 3 would change channels 1 and 2.

After you have entered these configuration commands, described above, MIPS will process changes automatically and no additional commands are needed. When MIPS is reset or power is lost this configuration information will be lost.

Pulse Sequence Triggering

The LDM module can be configured to automatically issue a trigger to the pulse sequence table. When a voltage change is detected the LDM will read the value, convert it to engineering units, and then use the lookup table to convert this value to a table number. This table number will be automatically set and the table triggered. To utilize this behavior the user will need to load all the required pulse sequence tables, configure the system to software trigger, and enable the table. The following MIPS command enables this behavior:

TRIGCHG,TWIadd

Where:

TWIadd = The LDM TWI interface address in hex, 32 by default

MIPS allows up to 5 total pulse sequence tables that can be loaded at one time. This behavior allows you to select the table to use based on the input value and to also trigger the table when a change is detected.

ARB Module Delay and Duration Control

The LDM module can be configured to automatically change the alternate waveform trigger delay or duration, both delay and duration are in mS. When a voltage change is detected the LDM will read the value, convert it to engineering units, and then use the lookup table to convert this value to a time in mS. This time value will be automatically sent to the select ARB modules. The following MIPS command enables this behavior:

CARBADLY,TWIadd,mask

This command will enable changing the delay value in the selected module(s).

Where:

TWIadd = The LDM TWI interface address in hex, 32 by default

mask = This is a 8 bit mask in hex used to select ARB module(s) you wish to change. The least significant bit in this mask is module 1, for example if you want to change only module 1 you would enter 1. Entering 3 would change modules 1 and 2.

CARBADUR,TWIadd,mask

This command will enable changing the duration value in the selected module(s).

Where:

TWIadd = The LDM TWI interface address in hex, 32 by default

mask = This is a 8 bit mask in hex used to select ARB module(s) you wish to change. The least significant

bit in this mask is module 1, for example if you want to change only module 1 you would enter 1. Entering 3 would change modules 1 and 2.

ESI Module gating

The LDM module can be configured to gate the ESI positive and negative output on and off using the input detected DC level. The LDM is configured in the factory for the users desired detection voltage rage. The MIPS ESI module front panel display allows the user to set the gate threshold and logic level.

LDM Configuration

The LDM can be configured by connecting to the USB port on the LDM to a host computer and connect using the MIPS host application. The terminal interface will allow you to use the following commands. These commands allow you to define the LDM parameters and then store these parameters in nonvolatile memory.

GVER
: Returns the current version string.

GERR
: Returns an integer error code indicating the reason for the last NAK. This value is never cleared and always indicates the communications last error.

MUTE, <Value>
: This command will stop all messages from the LDM system to the host computer. The received commands will still be processed but no response will be issued. The value parameter turns this mode on and off where:
  : Value = OFF to turn the responses on and ON to silence the LDM system.

ECHO,<TRUE or FALSE>
: Setting ECHO true will cause MIPS to include the command with all responses.

DELAY,<Value>
: This command will result in a delay of the defined number of millisec. This function is useful for defining macros where you are gradually changing voltage, for example ramping up the voltage on a system. Where:
  : Value = number of millisec to delay.

GCMDS
: This command will cause the MIPS system to display a list of valid commands that it understands.

RESET
: This command will cause the LDM control computer to reboot.

SAVE

This command will save the LDM parameters to nonvolatile memory.

RESTORE

This command will restore the LDM parameters from nonvolatile memory.

FORMAT

This command formats the nonvolatile memory with the LDM default values.

THREADS

The MIPS system uses a threading control and each module runs on its own Thread as well as a number of threads for control functions. This command displays all the threads and few key parameters. This command is used to monitor the system and check status, mainly a diagnostic tool.

STHRDENA,<Thread name>,<TRUE or FALSE>

This command allows you to enable or disable a Thread. This is done by using the thread name and defining it as TRUE or FALSE. If set to FALSE then the thread will stop. This is development and diagnostic tool.

M0PGM,<Address>,<Size>

This command is used by the MIPS host application to program the flash memory. Address is the hex address location to start programming and Size is the number of bytes (decimal) to program.

GOTO,<Address>

This command will cause the processor to goto the Address entered, the Address value is entered in hex.

WHERE

This command will return the current address pointer in hex.

ERASEU

This command will erase the upper half of the processors flash memory.

STWIADD,<Address>

This command defines the TWI address used by the LDM to communicate with MIPS. This value is decimal.

GTWIADD

This command returns the current TWI address used to communicate with MIPS. This value is decimal.

RADCRAW

This command returns the current ADC value in raw ADC counts.

RADC

This command reads the current ADC value and converts the raw data to engineering units and returns the result.

SMODE,<Mode>

This command allows you to define the LDM operating mode. The following modes are supported:

0 = Detection mode disabled

1 = ADC value > lower limit (LL)
2 = ADC value < upper limit (UL)
3 = ADC value within window defined by LL and UL
4 = ADC value outside window defined by LL and UL
5 = ADC value change

GMODE

This command returns the current mode.

STHRES,<Thres>

This command allows you to define the threshold in raw ADC counts. The larger this value the less sensitive to noise and also lower change resolution. The default is 6 and it's a good place to start.

GTHRES

This command returns the current threshold value in raw ADC counts.

SUPPER,<Ulimit>

This command allows you to set the upper limit value. This value is entered in engineering units.

GUPPER

This command returns the current upper limit.

SLOWER,<Llimit>

This command allows you to set the lower limit value. This value is entered in engineering units.

GLOWER

This command returns the current lower limit.

SMON,<TRUE | FALSE>

This command allows you to enable the monitor mode. When the monitor mode is enabled (TRUE) the LDM will return any detected changes.

GMON

This command returns the state of the monitor mode.

SZP,<Value>

This command allows you to define the zero point voltage, in volts. The range is 0 to 3.3 volts. This is set at the factory for the range you have selected.

GZP

Return the current zero point value in volts.

STMODE,<Tmode>

This command sets the lookup table mode, valid modes are listed below:

0 = Lookup table is disabled
1 = Lookup using ADC raw counts
2 = Lookup using ADC engineering units

GTMODE

Returns the current lookup table mode.

STBLENTRY,<Index>,<Lvalue>,<ADCval>

This command allows you to define a lookup table entry. There are a total of 5 lookup table entries selected by Index, value range is 0 to 4.

Lvalue is the value that will be returned when the current input voltage is closest to ADCval.

GTBLENTRY,<Index>

This command will return Lvalue and ADCval for the Index value entered.

LOOKUP

This command will read the current value and use the lookup table to find the closest ADCval in the table, its corresponding Lvalue is returned.

CALMON

This command is used to calibrate the LDM raw ADC value to engineering units. This command will ask you to set the input value and then enter the engineering units. You will then be asked to set a second input value and enter its engineering units. These two points will be used to generate a linear calibration function to convert raw ADC values into engineering units.

CALZP

This command is used to calibrate the zero point voltage. This command will set the zero point value and then ask you to enter the actual value by measuring the voltage on C3. Next the system will change the zero point voltage and ask you to measure the voltage on C3 again. These two points will be used to calibrate the zero point voltage generator.

In addition to using the USB interface on the LDM you can enter all the commands described above through MIPS. This allows you to use the MIPS USB interface without the need to connect to the LDM. It is not practical to directly connect to the LDM when it is installed in your MIPS system. Enter the following command to open the communication with the LDM:

TWI1TALK,0,50

This command will channel all communication to LDM, to exit this mode press the ESC key. Please note when you are connected to LDM all MIPS functions will stop. The example command assumes you are using the default TWI address of 32 hex, or 50 decimal.

You can also send individual commands without entering the TWI1TALK command and thus not locking up MIPS. You can execute the command listed above by first entering TWI1CMD,50 and then the command you wish to execute, for example:

TWI1CMD,50,GVER

Will return the LDM version string, again 50 is the LDM TWI address, decimal. Please note that this will not work for commands that return multiple lines or require interactive communications like the calibration commands.

Installing the LDM Module in MIPS

The LDM is simple to install. The LDM PC board is connected to a bulkhead BNC connector with a cable that connects to the MIPS controller. The MIPS controller is connected to the MIPS chassis front panel.

Installation involves:

1.) Finding a location on the rear panel for the BNC
2.) Drill a hole to mound the bulkhead BNC
3.) Install the module
4.) Connect the multi-pin cable to the MIPS controller.

Optionally you can install the module without mounting the BNC on the rear panel. You can bring the multi-pin cable out the front panel as shown in the pictures. This will allow rapid installation and testing, be careful to prevent damage to the cable.

Also please note the cable orientation where it connects to the MIPS controller. If you have an Ethernet module installed you will have to unplug it from the MIPS controller to use the LDM. You cannot use both the Ethernet module and LDM at the same time.

Do not disconnect the cable from LDM.

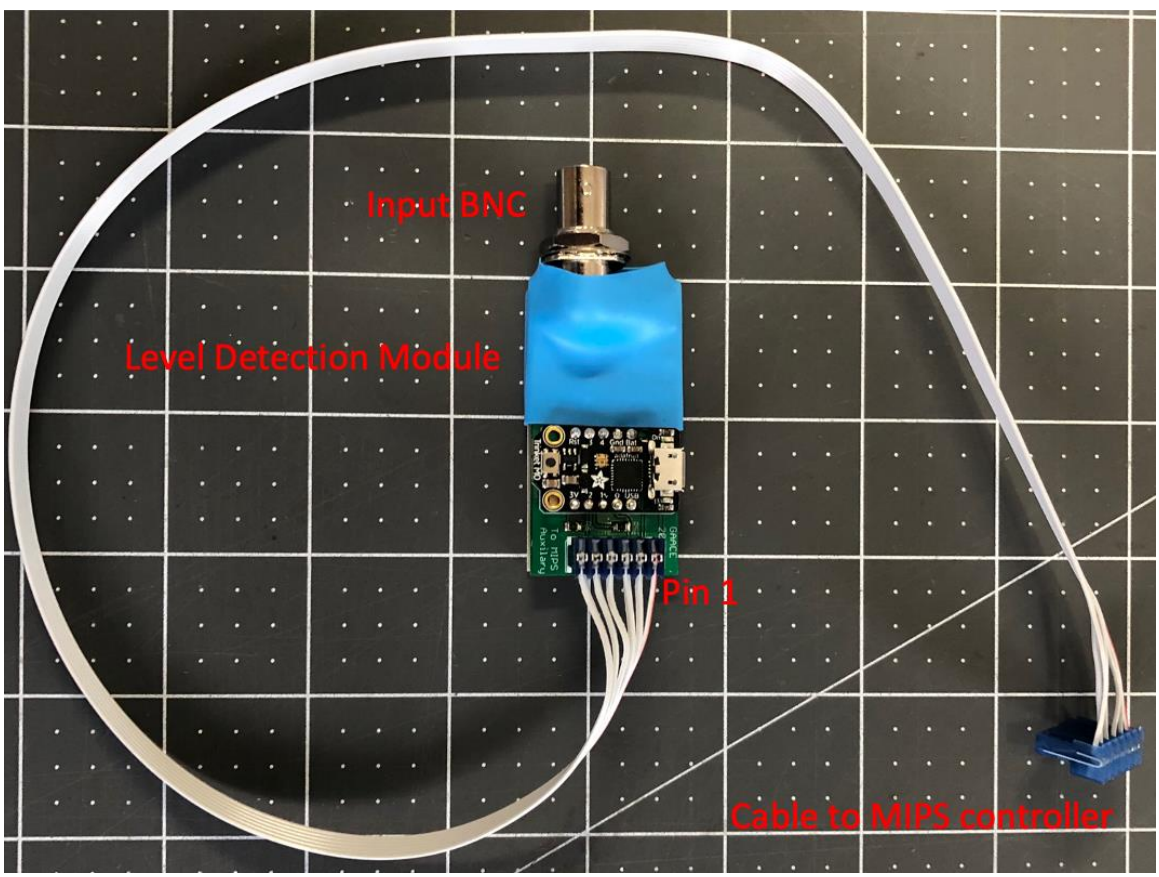

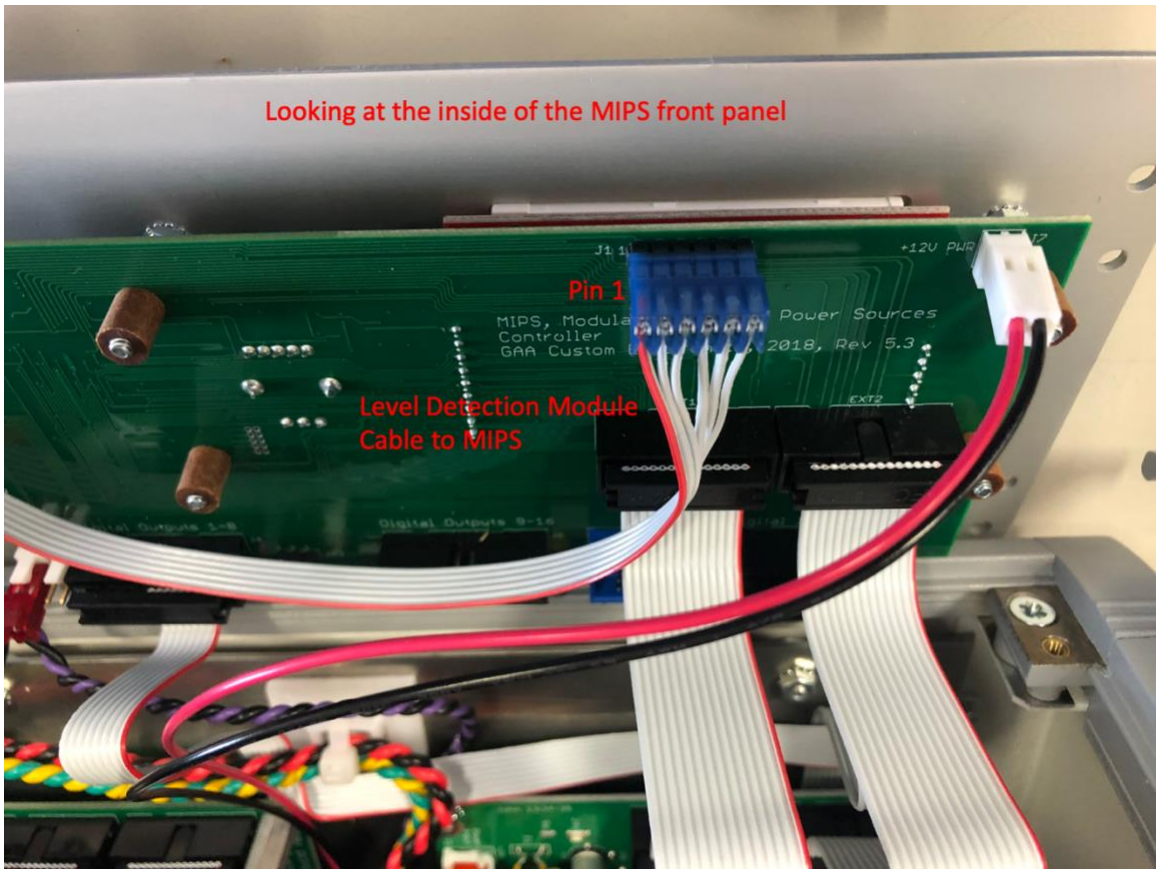
Looking at the inside of the MIPS front panel
Pin 1
Level Detection Module
Cable to MIPS
+12V PWR
Power Sources
2018, Rev 5.3
EXT2

Connection to MIPS controller Rev 5.4 and later

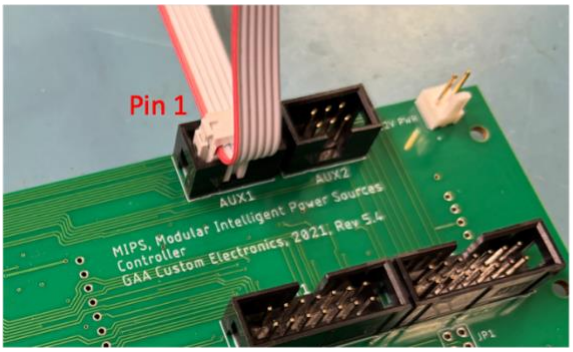

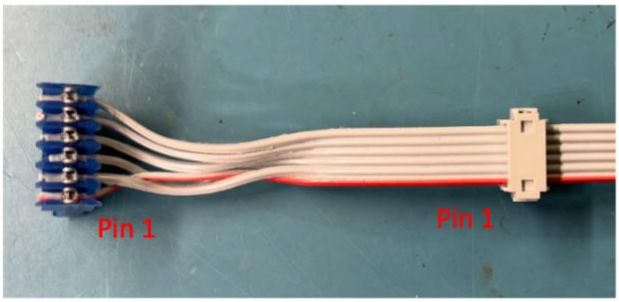

Universal MIPS connector installation. This will allow connection to all MIPS controller versions.

Note, pin 1 is on the opposite side of the connector on the LDM.

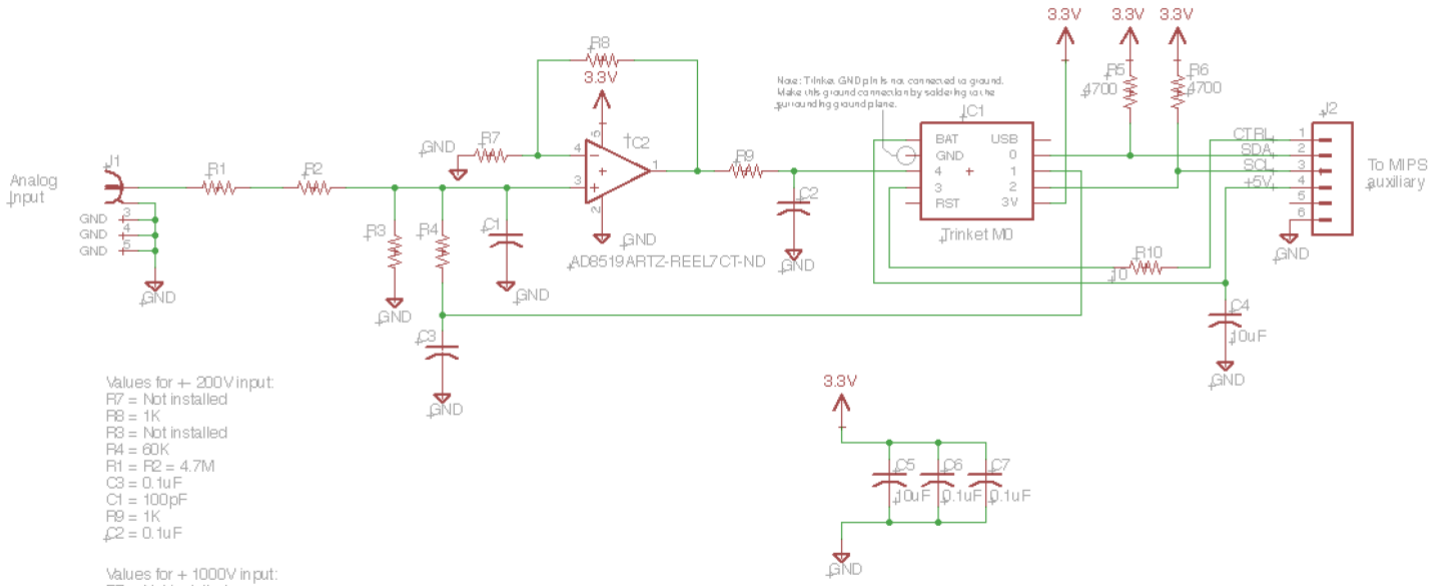

Values for +- 200V input:
R7 = Not installed
R8 = 1K
R3 = Not installed
R4 = 60K
R1 = R2 = 4.7M
C3 = 0.1uF
C1 = 100pF
R9 = 1K
C2 = 0.1uF

Values for + 1000V input:
R7 = Not installed
R8 = 1K
R3 = Not installed
R4 = 25K
R1 = R2 = 4.7M
C3 = 0.1uF
C1 = 100pF
R9 = 1K
C2 = 0.1uF

GAA Custom Electronics, LLC
Gordon Anderson
www.GAAcustom.com
gaa@owt.com
509.628.6851

Level Detector	
LevelDetectR1.0	
6/15/20 8:35 AM	
Sheet: 1/1	1.0

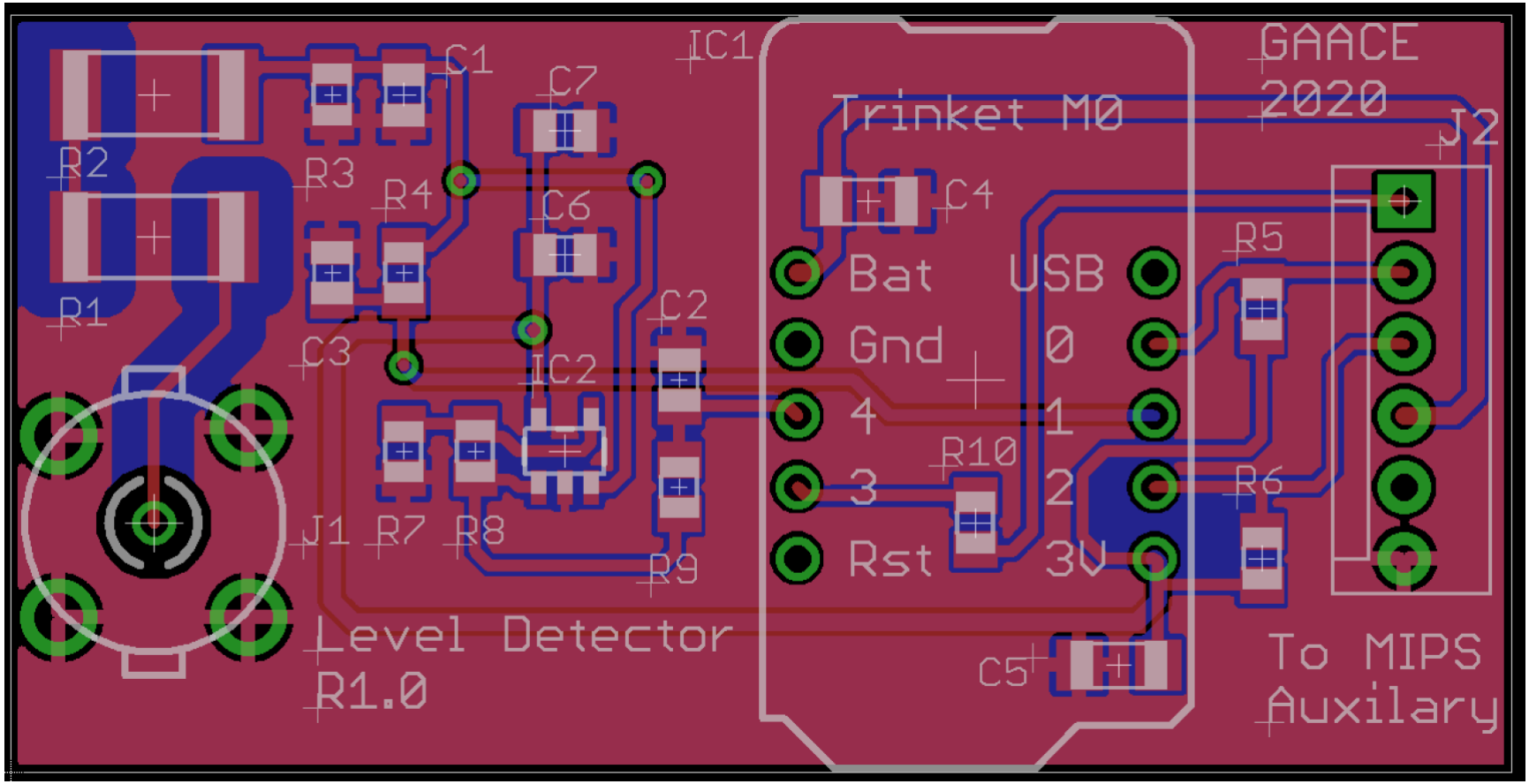
GAACE
2020
Trinket M0
IC1
C1
C7
R2
R3
R4
C6
C4
J2
R5
R1
C2
Bat
USB
Gnd
0
C3
IC2
4
1
R10
3
2
R6
J1
R7
R8
R9
Rst
3V
Level Detector
R1.0
C5
To MIPS
Auxilary