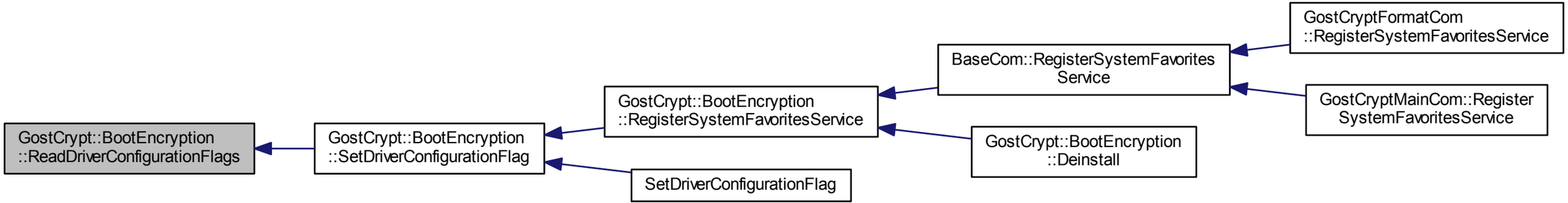
GostCrypt::BootEncryption
::ReadDriverConfigurationFlags
GostCrypt::BootEncryption
::SetDriverConfigurationFlag
GostCrypt::BootEncryption
::RegisterSystemFavoritesService
SetDriverConfigurationFlag
BaseCom::RegisterSystemFavorites
Service
GostCrypt::BootEncryption
::Deinstall
GostCryptFormatCom
::RegisterSystemFavoritesService
GostCryptMainCom::Register
SystemFavoritesService