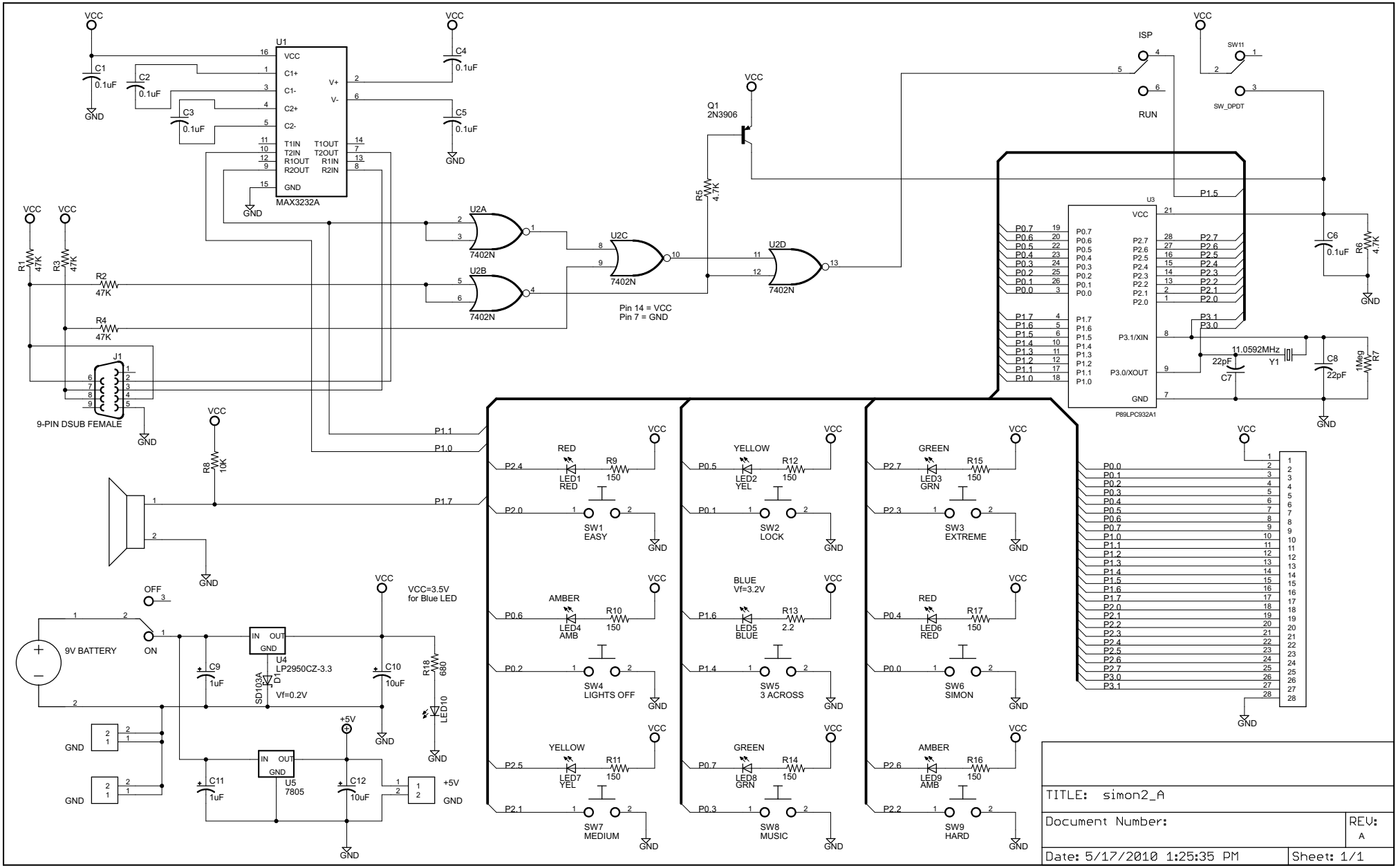
U1
MAX3232A
VCC
C1+
C1-
C2+
C2-
V+
V-
T1IN
T2IN
R1OUT
R2OUT
T1OUT
T2OUT
R1IN
R2IN
GND
C1 0.1uF
C2 0.1uF
C3 0.1uF
C4 0.1uF
C5 0.1uF
U2A
U2B
U2C
U2D
7402N
Pin 14 = VCC
Pin 7 = GND
Q1
2N3906
R5 4.7K
R1 47K
R2 47K
R3 47K
R4 47K
J1
9-PIN DSUB FEMALE
R8 10K
ISP
RUN
SW11
SW_DPDT
P1.5
U3
P89LPC932A1
P3.1/XIN
P3.0/XOUT
11.0592MHz
Y1
22pF
C7
C8 22pF
C6 0.1uF
R6 4.7K
1Meg
R7
P1.1
P1.0
P1.7
RED
LED1 RED
R9 150
SW1 EASY
YELLOW
LED2 YEL
R12 150
SW2 LOCK
GREEN
LED3 GRN
R15 150
SW3 EXTREME
AMBER
LED4 AMB
R10 150
SW4 LIGHTS OFF
BLUE
Vf=3.2V
LED5 BLUE
R13 2.2
SW5 3 ACROSS
RED
LED6 RED
R17 150
SW6 SIMON
YELLOW
LED7 YEL
R11 150
SW7 MEDIUM
GREEN
LED8 GRN
R14 150
SW8 MUSIC
AMBER
LED9 AMB
R16 150
SW9 HARD
OFF
ON
9V BATTERY
U4
LP2950CZ-3.3
IN OUT
GND
C9 1uF
D1
SD103A
Vf=0.2V
C10 10uF
VCC=3.5V
for Blue LED
R18 680
LED10
+5V
U5
7805
C11 1uF
C12 10uF
TITLE: simon2_A
Document Number:
REV: A
Date: 5/17/2010 1:25:35 PM
Sheet: 1/1